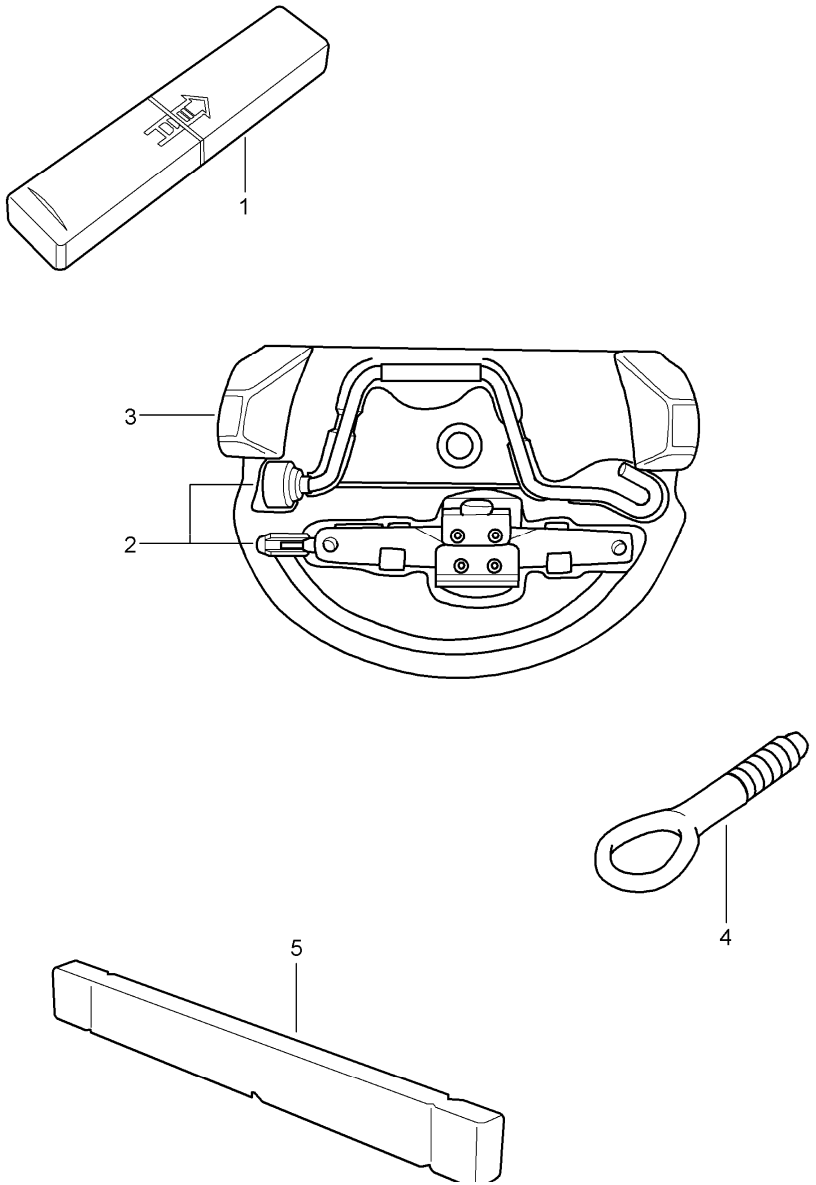

Pos	Part Number	Description	Remark	Qty	Model
		tool jack			
1	997 721 115 00	tool kit with contents comprising:		1	
-	477 012 229	double-end spanner 10 X 13		1	
-	477 012 231	screwdriver		1	
-	111 012 287	handle for screwdriver		1	
-	999 571 077 02	socket wrench - 5 - for headlamp		1	
2	996 721 211 00	scissors type jack		1	I447
3	996 722 101 00	foam part		1	I447
(3)	997 722 101 00	foam part		1	TURBO I422/447/450
-	999 571 074 30	threaded bolt for assembly wheels		1	I447
-	477 012 221 A	rim wrench		1	I447
-	999 571 070 30	operating rod for tool		1	I447
-	997 361 181 52	wheel bolt		1	TURBO I422/447
-	997 361 069 02	tool for wheel bolt		1	TURBO I422
-	997 361 161 00	extension for tool wheel bolt		1	TURBO I422/447
-	997 362 193 00	spacer	/V	1	TURBO I422/447

Pos	Part Number	Description	Remark	Qty	Model
-	997 362 195 00	spacer	/H	1	TURBO I422/447
-	997 722 801 00	mounting for tool		1	I447
-	996 361 521 00	boot		1	I447
-	997 722 061 01	cover		1	TURBO I447
		emergency wheel			
-	997 722 061 02	cover		1	TURBO I422/447/450
		emergency wheel			
-	997 722 073 00	restraining strap		1	TURBO I422/447/450
		emergency wheel			
-	997 722 103 00	mounting emergency wheel		1	TURBO/COUPE I447
-	997 722 103 01	mounting emergency wheel		1	TURBO/CABRIO I447
4	997 721 551 00	towing lug		1	

Model	Year	MG	SG	Illustration	Restrictions	UPD	19:55	06.02.2010	PET
997T2	2010	0	01	001-05		248	USA / CANADA		

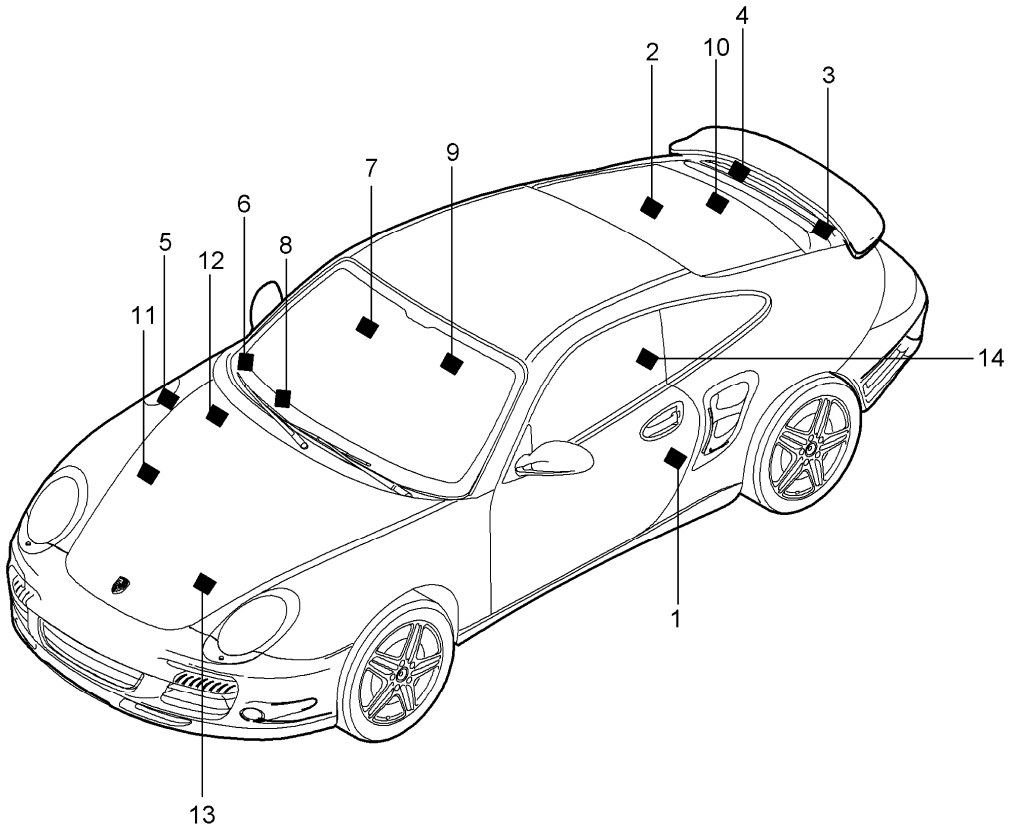

Pos	Part Number	Description	Remark	Qty	Model
		stickers			
		stickers tyre pressure without paint identification label		1	
1	997 701 289 6K	sticker		1	TURBO IXRR/421/422
1	997 701 289 7K	sticker	(USA)	1	TURBO IXRR/421/447
1	997 701 289 7L	sticker	(USA)	1	TURBO IXRR/421/422 I447/450
1	997 701 449 00	sticker Mercury		1	I484
2	7PP 010 707 K	sticker		1	I422/447/450
		stickers engine specifications			
3	997 006 109 76	sticker	10	1	TURBO
4	996 006 140 00	sticker antiknock regulation		1	
4	997 006 544 00	sticker engine oil - MOBIL 1 -		1	
		stickers type of fuel			
5	996 006 117 03	sticker 93 RON/MON/2		1	I113
		stickers airbag			
6	3B0 010 219 B	sticker child car seat		1	
7	996 701 423 01	sticker service airbag		1	
8	997 701 422 00	sticker airbag warning sign		1	
11	996 701 141 01	sticker air conditioner		1	

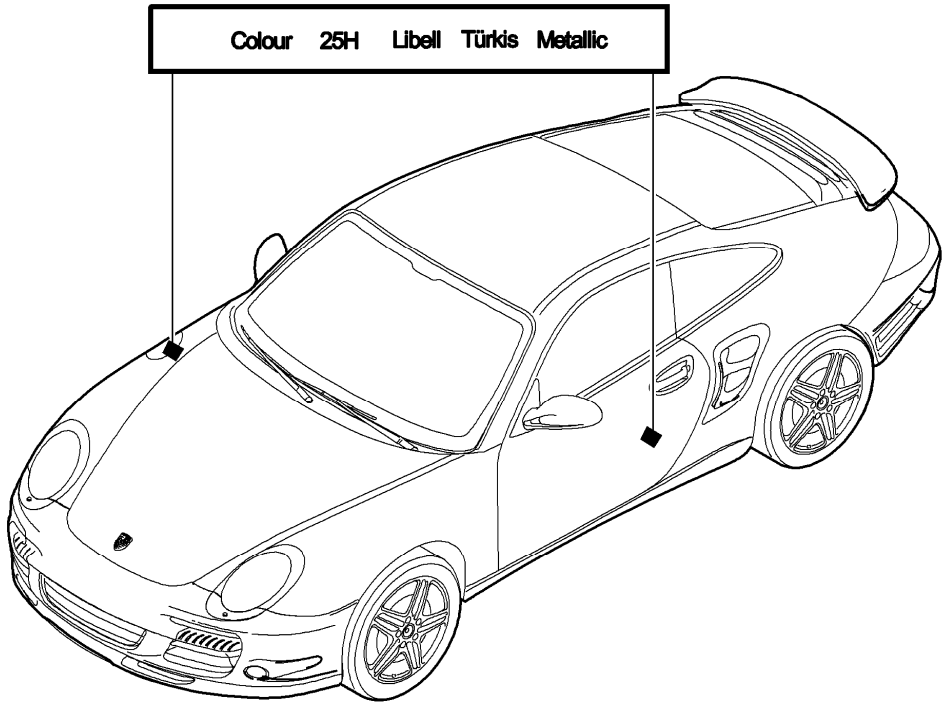

Pos	Part Number	Description	Remark	Qty	Model
		paint touch-up applicator lacquers			
-	911 095 932 20	paint touch-up applicator		X	
	041	black			A 1
	80K	guards red			G 1
	B9A	carrara white			B 4
	12G	speed yellow			X 4
	51A	creamy white			T 2
-	911 095 933 20	paint touch-up applicator set comprising: paint touch-up applicator primer paint touch-up applicator clear lacquer		X	
	92T	arctic silver metallic			X 1
	C9Z	basalt black metallic			Z 4
	M7X	atlas grey metallic			E 7
	M7Z	gt silver metallic			U 2
	M7W	Meteor Grey Metallic			9 Q
	M3X	ruby red metallic			A 6
	M8W	Macadamia Metallic			9 S
	2B5	Malachite Green Metallic			H 1
	M2Z	Nordic Gold Metallic			8 W
	M5R	Aqua Blue Metallic			D 2
	M5X	Dark Blue Metallic			N 4
	22G	porsche Racing Green Metallic			J 1

Model	Year	MG	SG	Illustration	Restrictions	UPD	13:12	26.02.2010
997T2	2010	1	01	101-00		249	USA / CANADA	

PORSCHE PET PORSCHE

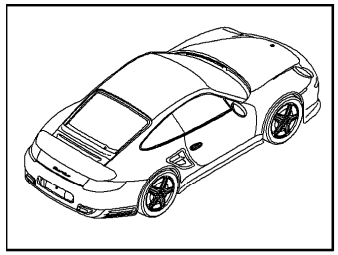

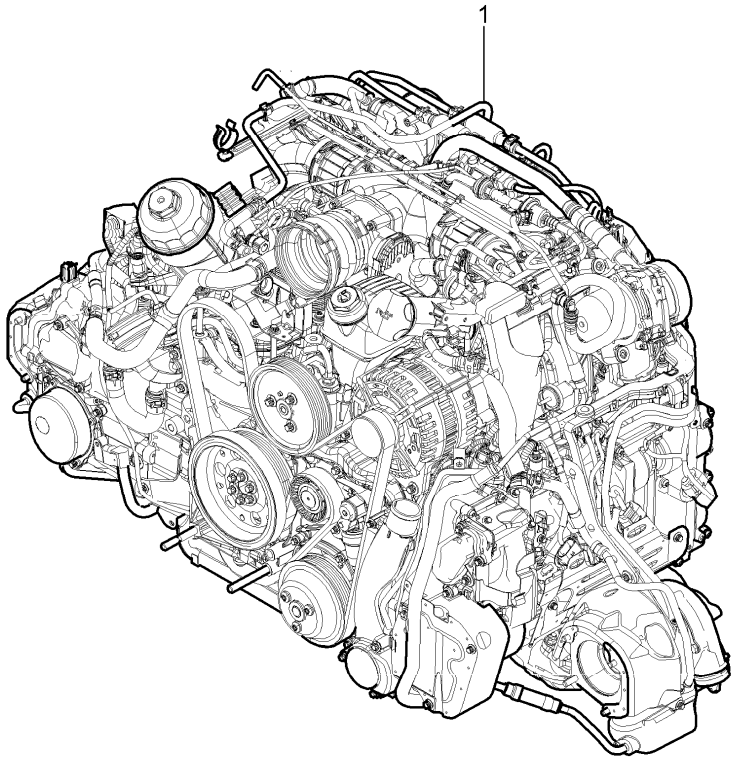

Pos	Part Number	Description	Remark	Qty	Model
		replacement engine			MA1.70
1	> 9A1 100 970 00	replacement engine		1	I480
1	9A1 100 970 X	replacement engine		1	I480
1	> 9A1 100 970 01	replacement engine		1	I250
1	9A1 100 970 AX	replacement engine		1	I250

Model	Year	MG	SG	Illustration	Restrictions	UPD	19:56	06.02.2010
997T2	2010	1	01	101-05		248	USA / CANADA	

PORSCHE PET PORSCHE

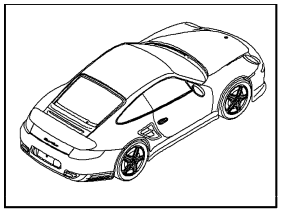

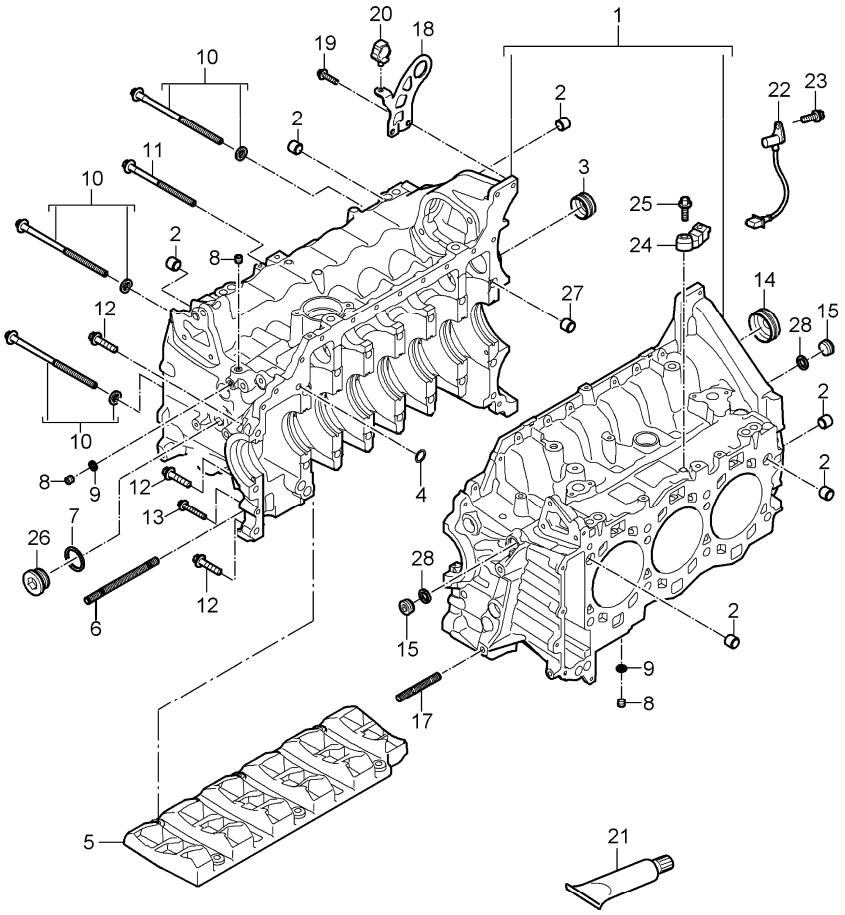

Pos	Part Number	Description	Remark	Qty	Model
		crankcase			
1	9A1 101 939 00	crankcase		1	
2	014 301 153 B	dowel sleeve		6	
3	9A1 101 215 01	lid		1	
4	999 707 568 40	o-ring 12,0 X 3,0		1	
5		oil separator see group 1/04/02		1	
6	900 060 108 01	stud M10 X 60		1	
7	900 123 015 30	sealing ring A30 X 36		1	
8	900 219 023 01	screw plug M10 X 1,0		4	
9	900 123 160 30	sealing ring 10 X 13,5		4	
10	9A1 101 250 00	Outer hexagon round screw M10 X 1,5 X 195		14	
11	900 385 281 01	torx screw M8 X 120		1	
12	900 385 042 01	torx screw M8 x 35		3	
13	900 385 045 01	torx screw M6 X 40		1	
14	9A1 101 216 01	lid		1	
15	900 219 019 01	screw plug M20 X 1,5		2	
17	900 060 108 01	stud M10 x 60		1	
18	9A1 101 213 00	shackle for transportation		1	
19	900 385 072 01	torx screw M6 X 25		14	
20	999 507 075 40	cable holder		1	
21	000 043 207 31	sealing compound 80 ML		X	

Pos	Part Number	Description	Remark	Qty	Model
22	9A1 606 112 01	pulse sender		1	
23	900 387 264 01	pan-head screw M6 X 16		2	
24	997 606 121 00	knock sensor		2	
25	900 385 042 01	torx screw M8 X 35		3	
26	900 219 025 30	screw plug M30 x 1,5		1	
27	996 101 225 50	dowel sleeve		1	
28	900 123 159 30	sealing ring 20 x 24		2	

Pos	Part Number	Description	Remark	Qty	Model

Model	Year	MG	SG	Illustration	Restrictions	UPD	19:56	06.02.2010
997T2	2010	1	01	101-10		248	USA / CANADA	

PORSCHE PET PORSCHE

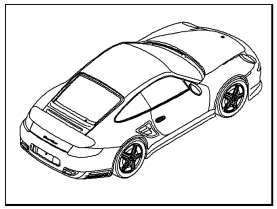

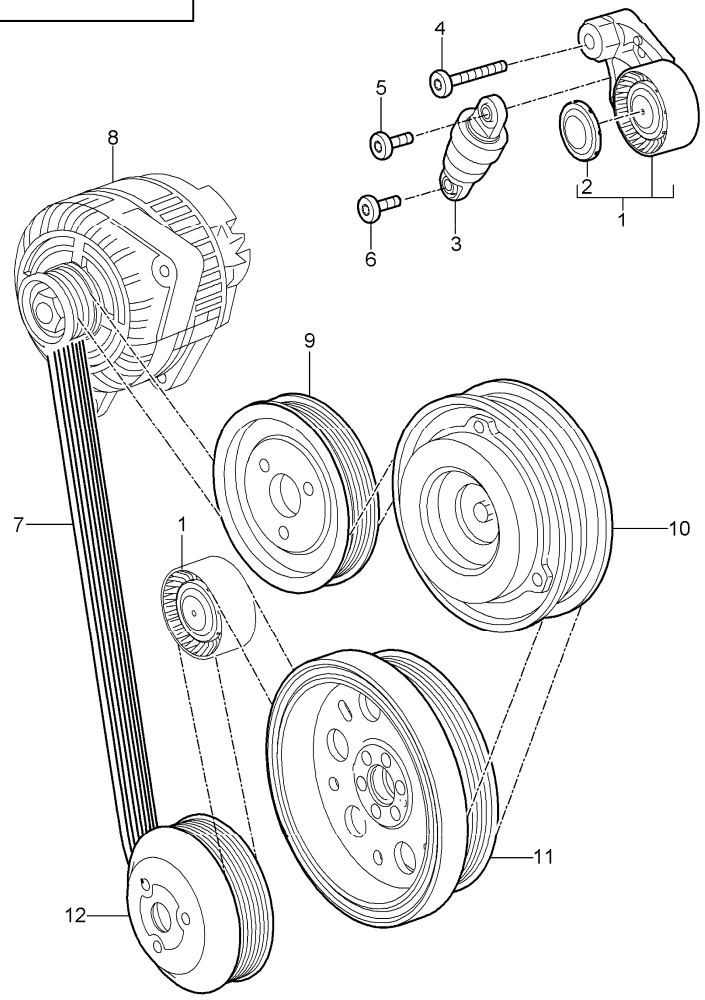

Pos	Part Number	Description	Remark	Qty	Model
		belt tensioner v-belt			
1	9A1 102 211 00	lever tensioning roller		1	
2	948 102 839 00	protection cap		1	
3	948 102 261 00	tensioner hydraulic		1	
4	999 073 411 01	torx screw M8 X 60		1	
5	999 073 246 09	torx screw M8 X 33		1	
6	999 073 412 01	torx screw M8 X 26		1	
7	9A1 102 216 01	v-belt		1	
8		generator see group 9/02/05		1	
9		pulley power-steering pump see group 4/03/03		1	
10		pulley compressor see group 8/13/15		1	
11		pulley crankshaft see group 1/02/00		1	
12		pulley water pump see group 1/05/00		1	

Model	Year	MG	SG	Illustration	Restrictions	UPD	19:56	06.02.2010
997T2	2010	1	02	102-00		248	USA / CANADA	

PORSCHE PET PORSCHE

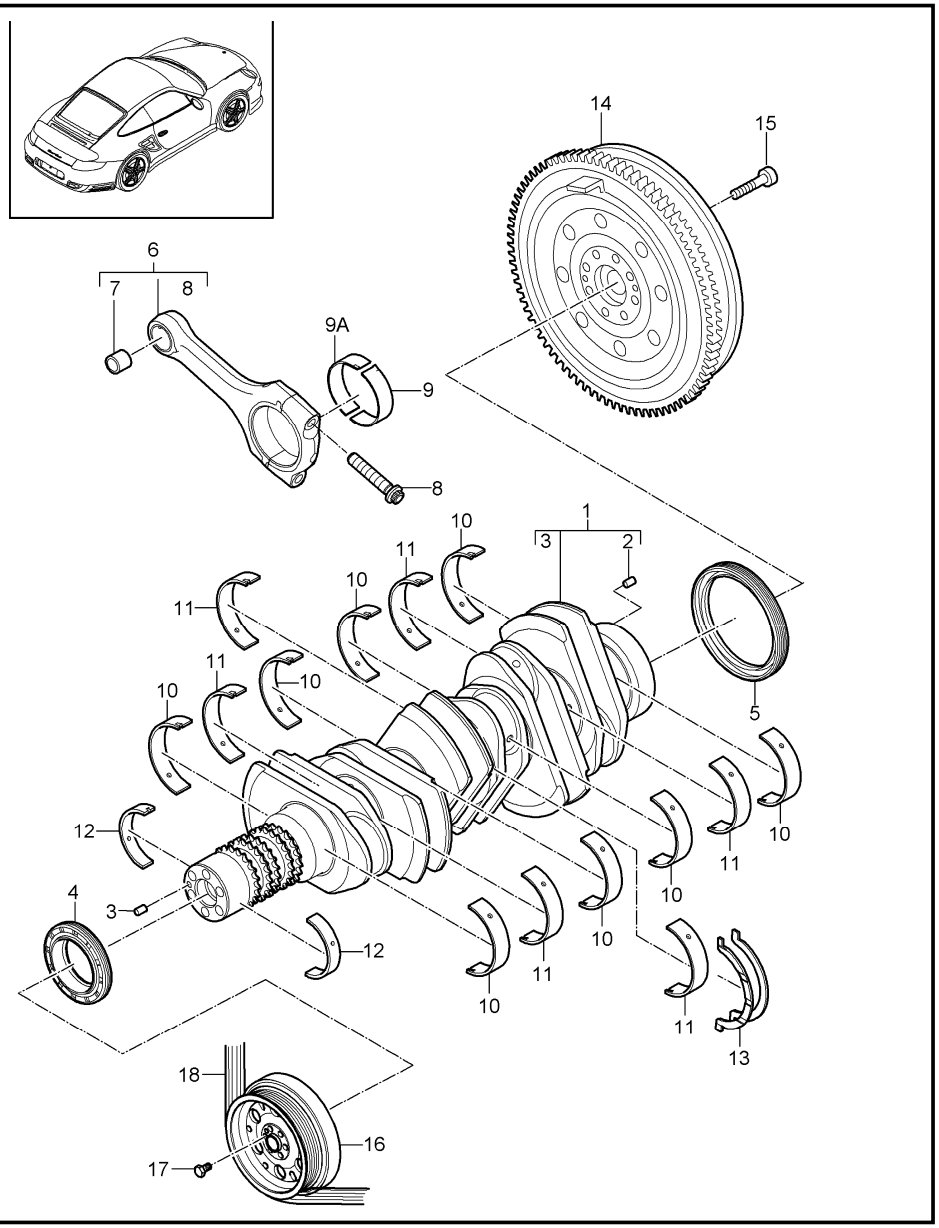

Pos	Part Number	Description	Remark	Qty	Model
		crankshaft			
1	9A1 102 077 70	crankshaft		1	
2	900 095 031 00	tensioning sleeve 6,0 X 16		1	
3	900 302 016 00	straight pin A 6,0 X 16		1	
4	9A1 101 222 02	shaft sealing ring 52,6 X 16,2		1	
5	997 101 212 01	shaft sealing ring 85 x 105 x 11		1	
6	9A1 103 917 03	connecting rod set comprising: connecting rods		1 6	
8	9A1 103 115 02	connecting rod bolt M 10 X 1,25 X 51		12	
9	9A1 103 053 00	connecting-rod bearing identification red		6	
(9)	9A1 103 053 01	connecting-rod bearing identification yellow		6	
(9)	9A1 103 053 02	connecting-rod bearing identification blue		6	
9A	9A1 103 073 03	connecting-rod bearing identification red		6	
9A	9A1 103 073 04	connecting-rod bearing identification yellow		6	
9A	9A1 103 073 05	connecting-rod bearing identification blue		6	
10	9A1 101 064 00	crankshaft bearing identification red		8	
(10)	9A1 101 064 01	crankshaft bearing identification yellow		8	

Pos	Part Number	Description	Remark	Qty	Model
(10)	9A1 101 064 02	crankshaft bearing identification blue		8	
11	9A1 101 063 00	crankshaft bearing with * identification red		6	
(11)	9A1 101 063 01	crankshaft bearing with * identification yellow		6	
(11)	9A1 101 063 02	crankshaft bearing with * identification blue		6	
12	9A1 101 052 00	supporting mount identification red		2	
(12)	9A1 101 052 01	supporting mount identification yellow		2	
(12)	9A1 101 052 02	supporting mount identification blue		2	
13	996 101 132 00	thrust washer D = 63		2	
14	9G1 114 012 51	double-mass flywheel		1	I480
(14)	9G1 114 020 51	double-mass flywheel		1	I250
15	N 906 651 01	pan-head screw M 10 X 1 X 29		10	
16	9A1 102 146 02	pulley with vibration damper		1	
17	900 385 127 01	Outer hexagon round screw M 8 X 25		6	
18		v-belt see group 1/01/10		1	

Pos	Part Number	Description	Remark	Qty	Model

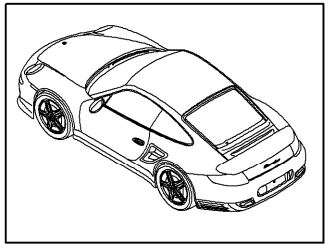

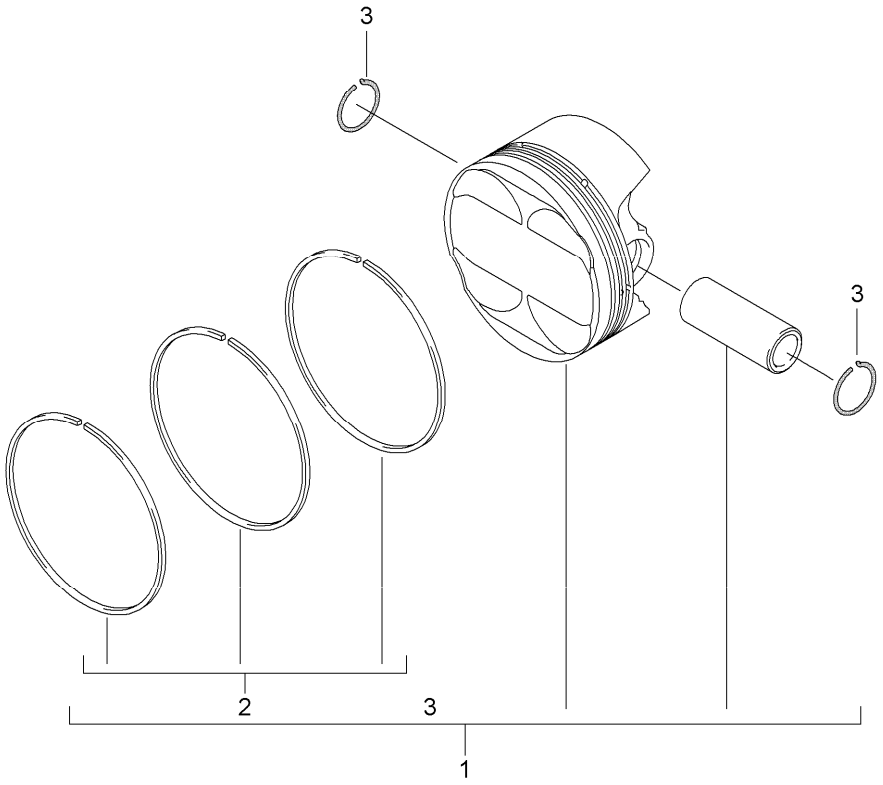

Pos	Part Number	Description	Remark	Qty	Model
		piston			
1	9A1 103 039 73	piston tolerance range X		6	
2	9A1 103 075 02	set of piston rings		6	
3	9A1 103 241 01	circlip		12	

Model	Year	MG	SG	Illustration	Restrictions	UPD	20:01	06.02.2010
997T2	2010	1	03	103-00		248	USA / CANADA	

PORSCHE PET PORSCHE

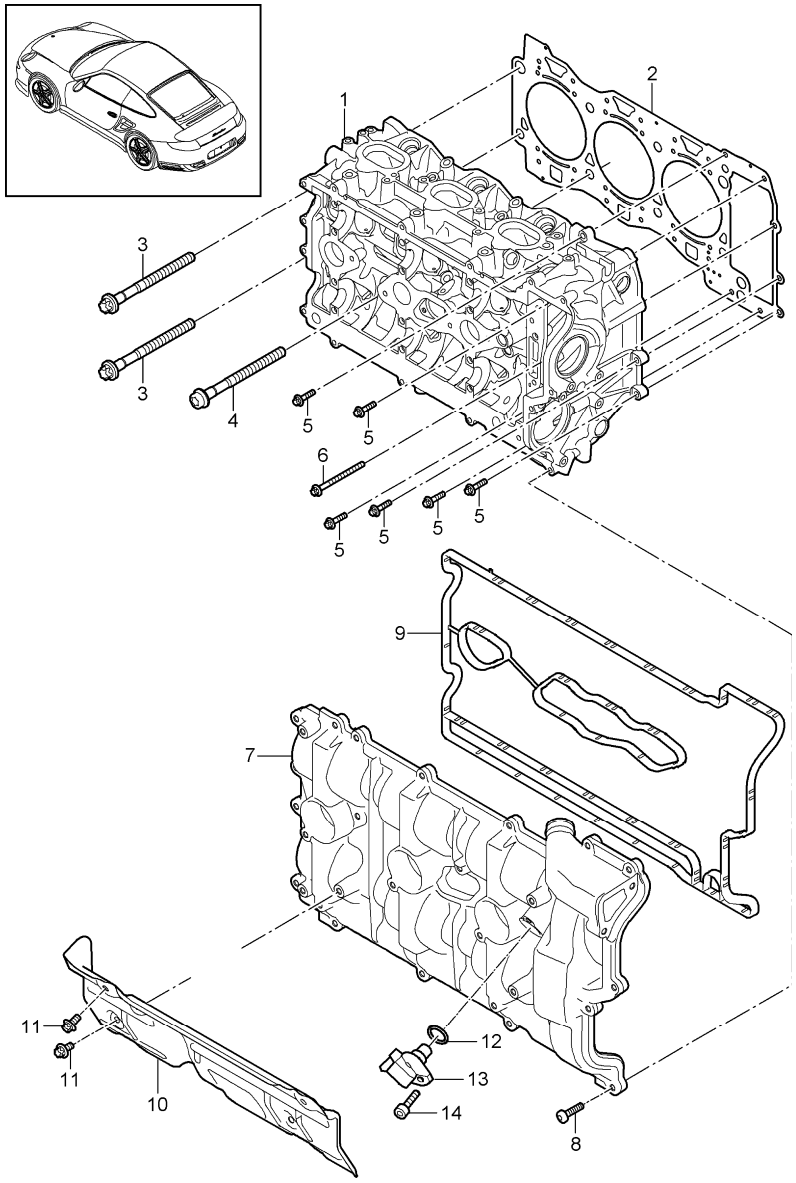

Pos	Part Number	Description	Remark	Qty	Model
		cylinder head with valves cylinder head gasket valve cover			
1	9A1 104 909 00	cylinder head cyl. 1 - 3		1	
(1)	9A1 104 910 00	cylinder head cyl. 4 - 6		1	
2	9A1 104 147 03	cylinder head gasket cyl. 1 - 3		1	
(2)	9A1 104 146 03	cylinder head gasket cyl. 4 - 6		1	
3	9A1 104 191 00	torx screw M12 X 1,5 X 140		4	
4	9A1 104 191 02	torx screw M12 X 1,5 X 140		12	
5	900 385 072 01	torx screw M6 X 25		10	
6	900 385 108 02	torx screw M6 X 80		2	
7	9A1 105 231 04	valve cover cyl. 1 - 3		1	
(7)	9A1 105 232 04	valve cover cyl. 4 - 6		1	
8	9A1 107 313 00	torx screw M6 X 25		40	
9	9A1 105 731 03	gasket valve cover cyl. 1 - 3		1	
(9)	9A1 105 732 03	gasket valve cover cyl. 4 - 6		1	
10	9A1 104 309 71	heat protection cyl. 1 - 3		1	
(10)	9A1 104 310 70	heat protection cyl. 4 - 6		1	
11	900 385 041 01	torx screw M6 X 12		4	

Pos	Part Number	Description	Remark	Qty	Model
12	999 707 404 40	o-ring 17,05 X 1,78		2	
13	997 606 106 03	hall sender		2	
14	900 387 264 01	pan-head screw M 6 X 16		2	

Pos	Part Number	Description	Remark	Qty	Model

Model	Year	MG	SG	Illustration	Restrictions	UPD	20:01	06.02.2010
997T2	2010	1	03	103-05		248	USA / CANADA	

PORSCHE PET PORSCHE

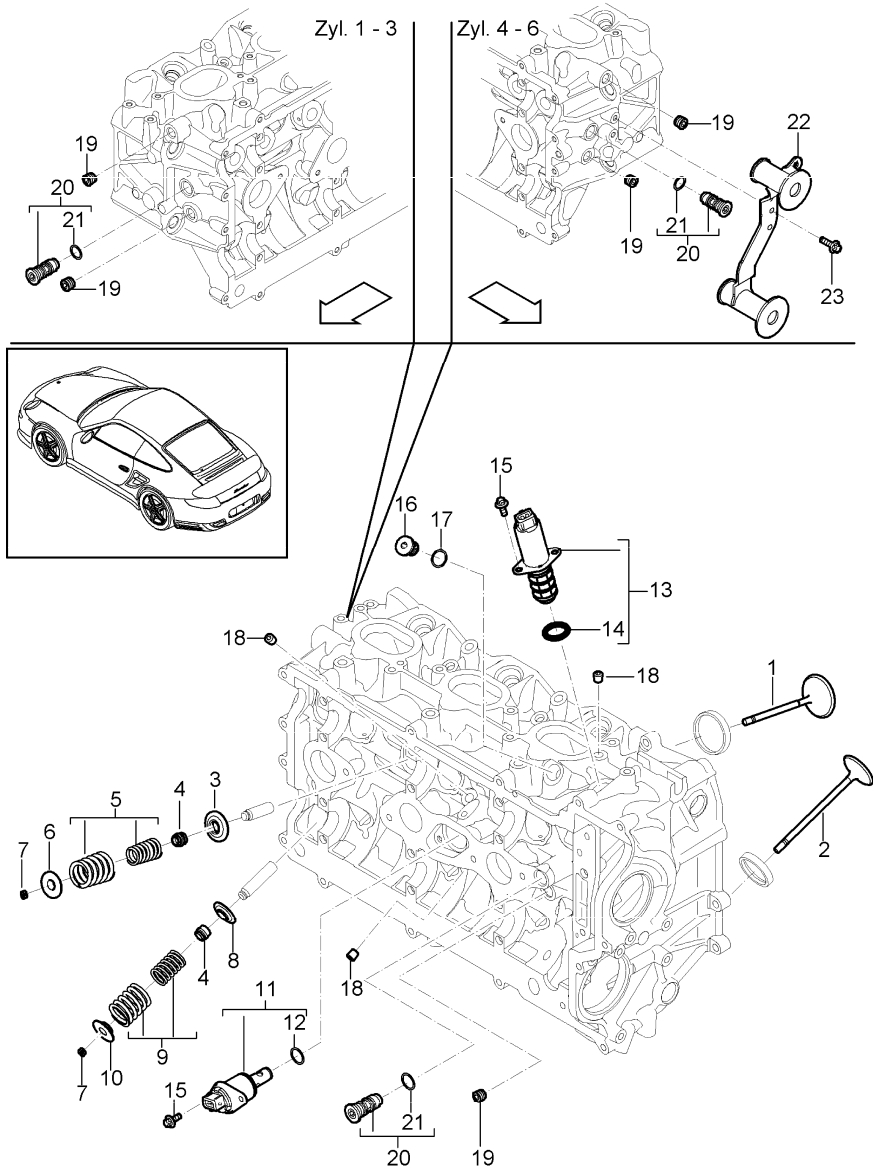

Pos	Part Number	Description	Remark	Qty	Model
		cylinder head accessories valves			
1	9A1 105 312 02	intake valve		12	
2	9A1 105 326 00	exhaust valve		12	
3	948 105 151 01	concave washer intake lower		12	
4	996 105 115 52	valve stem seal		24	
5	948 105 094 00	set of valve springs intake		12	
6	948 105 150 01	concave washer intake upper		12	
7	996 105 123 52	valve collet		48	
8	9A1 105 253 70	concave washer exhaust lower		12	
9	9A1 105 115 70	set of valve springs set exhaust		12	
10	9A1 105 252 70	concave washer exhaust upper		12	
11	9A1 105 308 02	actuator VVS		2	
12	900 331 057 40	o-ring 11,2 X 2,65		2	
13	9A1 105 304 02	actuator NVS		2	
14	999 707 446 40	o-ring 18 X 2,5		2 2	
15	900 385 112 01	torx screw M 5 X 12		8	
16	900 219 002 03	screw plug		1	
17	900 123 104 30	sealing ring 14 X 18		2	
18	900 063 010 01	screw plug M 8 X 1,0		3	

Pos	Part Number	Description	Remark	Qty	Model
20	9A1 104 250 00	restrictor		4	
21	999 707 577 40	o-ring 10 x 2,5N		4	
22	A 9A1 104 370 01	connection piece cyl. 4 - 6		1	
22	N 9A1 104 272 01	connection piece cyl. 4 - 6		1	
23	900 385 019 01	torx screw M 6 x 20		2	
24	P 9A1 104 371 00	damping piece		2	

Pos	Part Number	Description	Remark	Qty	Model

Model	Year	MG	SG	Illustration	Restrictions	UPD	20:01	06.02.2010
997T2	2010	1	03	103-10		248	USA / CANADA	

PORSCHE PET PORSCHE

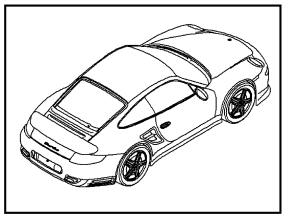

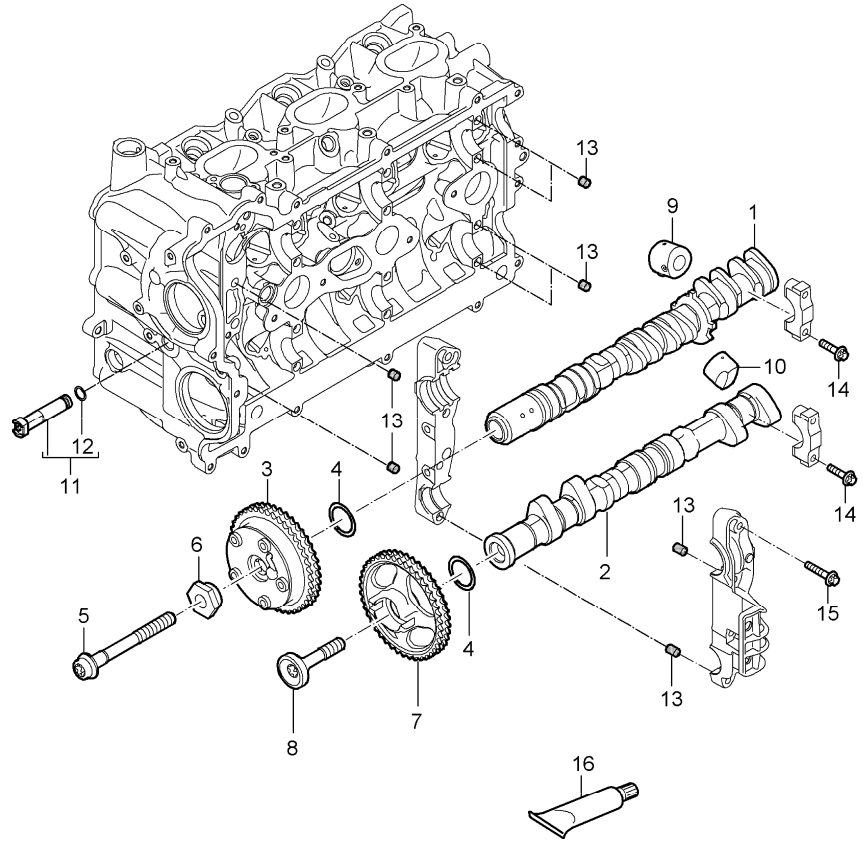

Pos	Part Number	Description	Remark	Qty	Model
		camshaft hydraulic valve tappet camshaft adjuster			
1	9A1 105 013 74	camshaft intake cyl. 1 - 3		1	
(1)	9A1 105 014 74	camshaft intake cyl. 4 - 6		1	
2	9A1 105 215 73	camshaft exhaust cyl. 1 - 3		1	
(2)	9A1 105 216 73	camshaft exhaust cyl. 4 - 6		1	
3	9A1 105 052 01	camshaft adjuster		1	
4	9A1 105 403 02	washer camshaft adjuster		1	
5	9A1 105 254 02	torx screw M12 X 50		2	
6	9A1 105 245 00	sleeve camshaft adjuster		1	
7	9A1 105 147 02	sprocket camshaft exhaust cyl. 1 - 3		1	
7	9A1 105 148 02	sprocket camshaft exhaust cyl. 4 - 6		1	
8	9A1 105 255 01	torx screw		2	
9	9A1 105 070 03	hydraulic valve tappet intake		12	
10	9A1 105 071 00	hydraulic valve tappet exhaust		12	
11	9A1 104 402 02	oil tube cyl. 4 - 6		1	
12	999 707 576 40	o-ring 7,0 X 2,5		1	
13	999 095 075 01	dowel sleeve 8 x 7		32	

Pos	Part Number	Description	Remark	Qty	Model
14	999 073 450 02	Outer hexagon round screw M 6 X 37		24	
15	900 385 111 01	torx screw M 6 X 55		8	
16	000 043 024 00	extreme-pressure grease 1 tube 80 Gr. for camshaft		1	

Pos	Part Number	Description	Remark	Qty	Model

Model	Year	MG	SG	Illustration	Restrictions	UPD	20:01	06.02.2010
997T2	2010	1	03	103-15		248	USA / CANADA	

PORSCHE PET PORSCHE

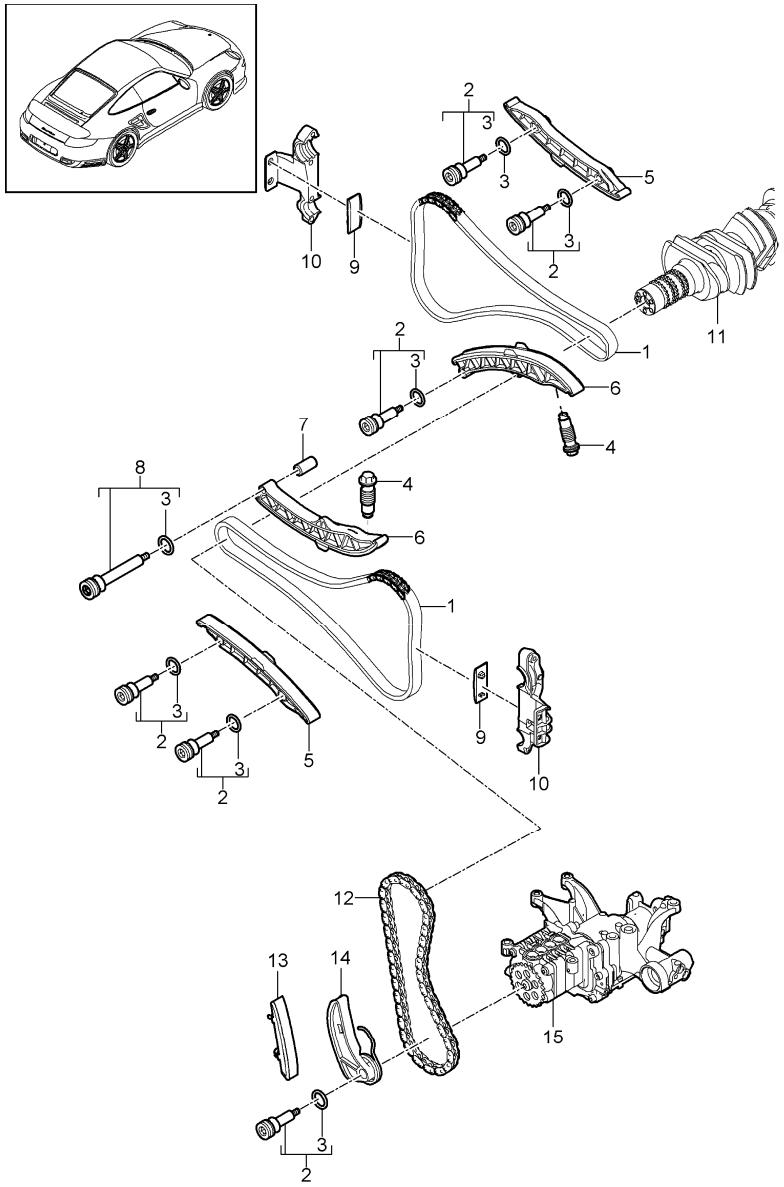

Pos	Part Number	Description	Remark	Qty	Model
		valve control			
1	9A1 105 142 02	timing chain camshaft crankshaft		2	
2	9A1 105 162 01	screw tensioner blade		6	
3	999 707 346 40	o-ring 15,0 X 3,0		X	
4	9A1 105 157 02	chain adjuster		2	
5	9A1 105 153 02	guide rail		2	
6	9A1 105 155 02	tensioner blade		2	
7	9A1 105 165 01	spacer sleeve		2	
8	9A1 105 163 01	screw		1	
9	9A1 105 101 02	guide rail		2	
10		housing see group 1/03/00		2	
11		crankshaft see group 1/02/00		1	
12	9A1 105 233 02	timing chain oil pump crankshaft		1	
13	9A1 105 237 02	guide rail		1	
14	9A1 105 235 02	tensioner blade		1	
15		oil pump see group 1/04/00		1	

Model	Year	MG	SG	Illustration	Restrictions	UPD	20:02	06.02.2010
997T2	2010	1	04	104-00		248	USA / CANADA	

PORSCHE PET PORSCHE

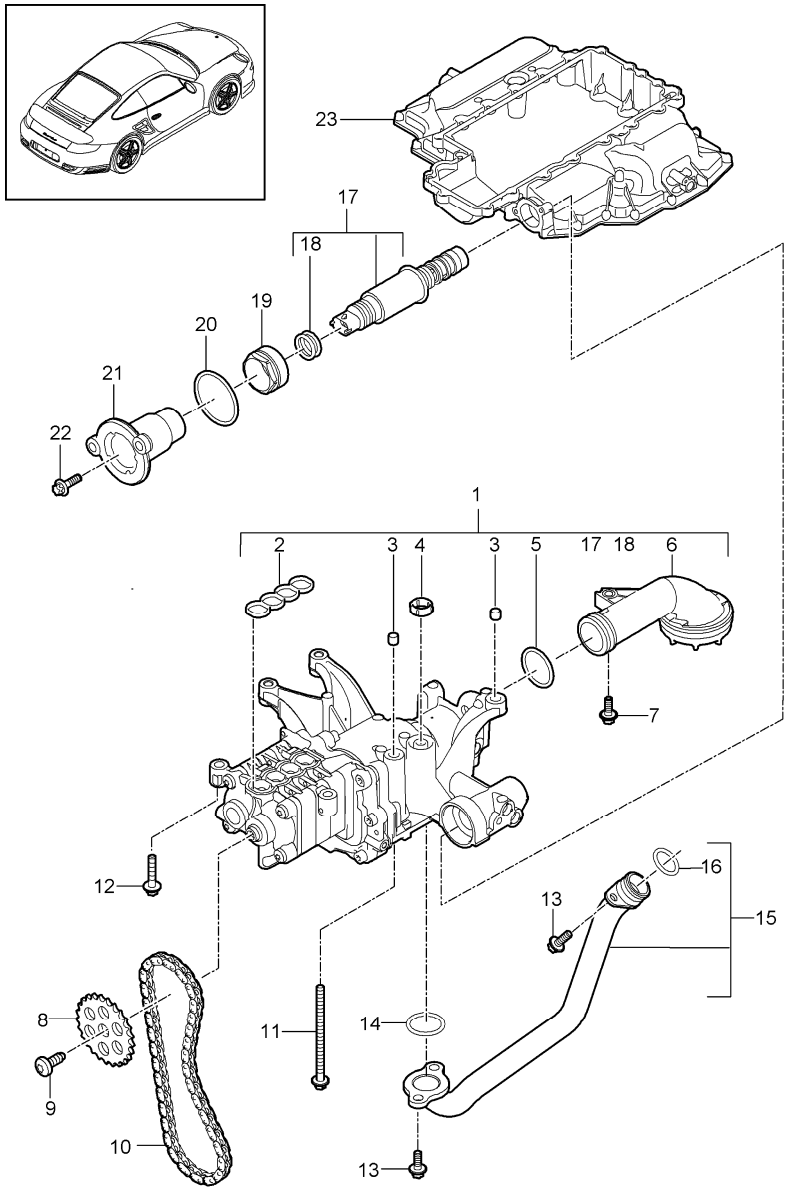

Pos	Part Number	Description	Remark	Qty	Model
		oil pump			
1	9A1 107 070 04	oil pump		1	
2	9A1 107 370 00	gasket		1	
3	996 106 103 50	dowel sleeve 8,2 X 7,0		2	
4	9A1 107 327 00	sealing ring		1	
5	999 707 375 40	o-ring 30,00 X 3,00		1	
6	9A1 107 075 02	suction tube		1	
7	999 073 102 01	round head screw M6 X 25		1	
8	9A1 105 225 02	sprocket oil pump		1	
9	999 073 380 01	torx screw M8 X 22		1	
10		chain oil pump see group 1/03/15		1	
11	900 385 126 01	torx screw M6 X 95		1	
12	900 385 048 01	torx screw M6 X 30		5	
13	900 385 009 01	torx screw M6 X 16		1	
14	999 707 409 40	o-ring 26,00 X 3,00		1	
15	9A1 107 025 01	oil tube oil pump crankcase		1	
16	999 707 575 40	o-ring 20,00 X 3,00		1	
17	948 107 113 02	solenoid valve		1	
18	999 707 567 40	o-ring 17,00 X 3,00		2	
19	999 261 024 01	union nut M36 x 1,0 x 12		1	

Pos	Part Number	Description	Remark	Qty	Model
20	999 707 570 40	o-ring 44,00 x 3,00		1	
21	9A1 107 330 01	joint flange control valve		1	
22	900 385 019 01	torx screw M6 X 20		2	
23		oil pan upper part see group 1/04/02		1	

Pos	Part Number	Description	Remark	Qty	Model

Model	Year	MG	SG	Illustration	Restrictions	UPD	20:02	06.02.2010
997T2	2010	1	04	104-02		248	USA / CANADA	

PORSCHE PET PORSCHE

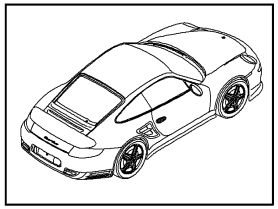

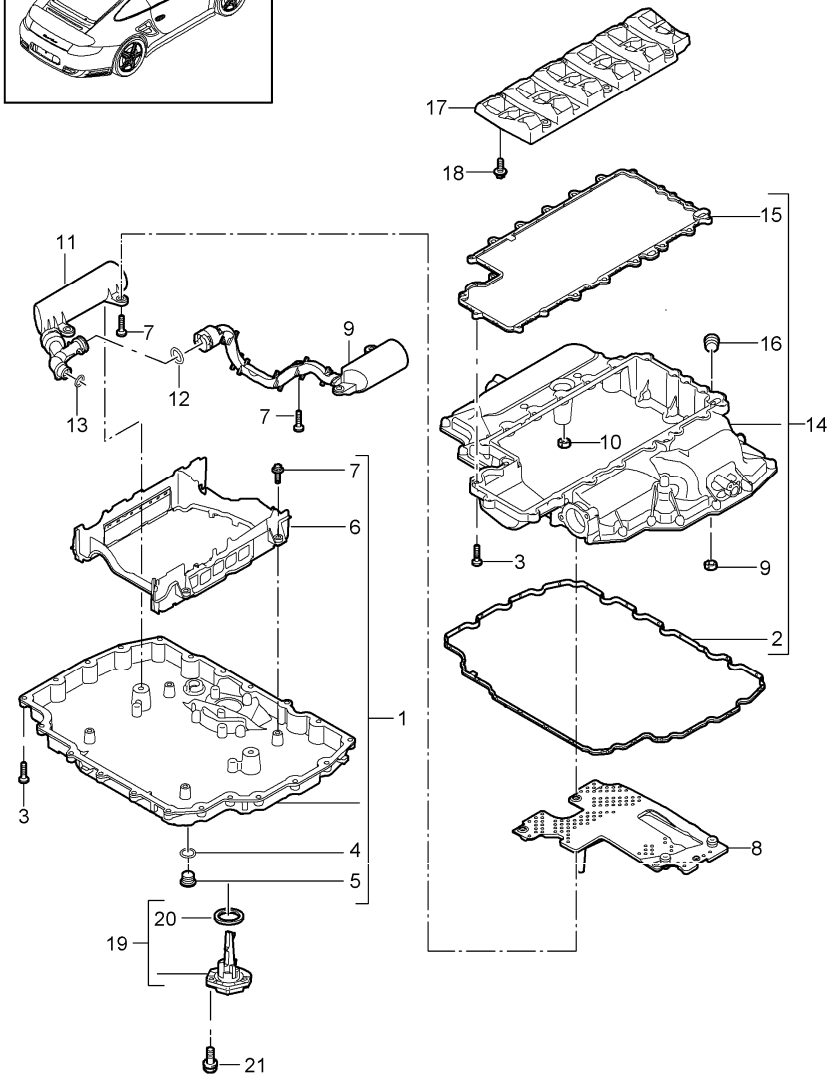

Pos	Part Number	Description	Remark	Qty	Model
		oil pan			
1	9A1 107 032 71	oil pan lower part		1	
2	9A1 107 325 02	gasket oil pan		1	
3	9A1 107 313 00	torx screw M 6 X 25		X	
4	900 123 106 30	sealing ring A 18 X 24		1	
5	900 219 020 31	screw plug M 18 X 1,5		1	
6	9A1 107 243 70	bulkhead		1	
7	900 385 019 01	torx screw M6 x 20		4	
8	9A1 107 420 70	oil separator		1	
9	9A1 107 383 01	oil separator		1	
10	9A1 107 327 00	sealing ring		3	
11	9A1 107 380 01	oil separator		1	
12	948 107 439 10	o-ring 20,0 X 3,8		2	
13	999 707 637 40	o-ring 15,0 X 3,0		1	
14	9A1 107 031 71	oil pan upper part		1	
15	9A1 107 315 03	gasket		1	
16	900 063 010 01	screw plug M8 X 1,0		1	
17	9A1 101 010 00	oil separator		1	
18	900 385 019 01	torx screw M6 X 20		3	
19	948 606 150 00	oil-level sender		1	
20	948 606 240 00	gasket		1	
21	900 385 072 01	torx screw M 6 X 25		3	

Model	Year	MG	SG	Illustration	Restrictions	UPD	20:02	06.02.2010
997T2	2010	1	04	104-05		248	USA / CANADA	

PORSCHE PET PORSCHE

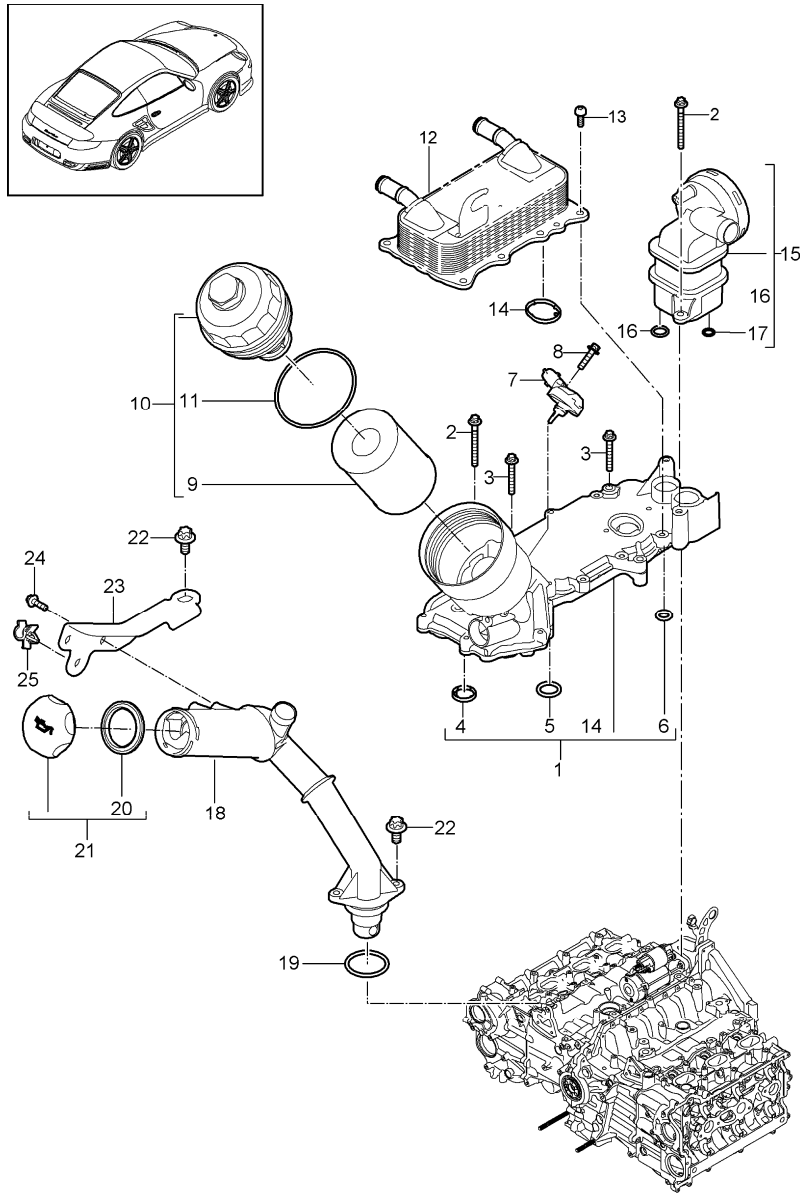

Pos	Part Number	Description	Remark	Qty	Model
		engine lubrication			
1	9A1 107 030 02	Oil-conducting housing		1	
2	900 385 276 01	torx screw M6 X 60		1	
3	900 385 125 01	torx screw M6 X 45		6	
4	9A1 107 465 01	sealing ring Oil-conducting housing crankcase		2	
5	999 707 595 40	o-ring 20,0 x 4,0		1	
6	999 707 594 40	o-ring 11 X 4,0		1	
7	948 606 213 00	oil pressure sender		1	
8	900 385 019 01	torx screw M6 X 25		2	
9	948 107 222 00	filter element		1	
10	948 107 122 00	housing oil filter		1	
11	948 107 322 00	sealing ring 91,0 X 4,0		1	
12	9A1 107 455 00	heat exchanger		1	
13	999 073 416 01	combination screw M6 X 20		6	
14	948 107 175 00	gasket		2	
15	9A1 107 040 00	oil separator		1	
16	999 707 635 40	o-ring 21,0 x 4,0		1	
17	999 707 634 40	o-ring 18,50 X 4,0		1	
18	9A1 107 115 02	filler tube engine oil		1	
19	999 707 348 40	o-ring 42,0 X 4,0		1	
20	9A1 107 336 00	gasket lid		1	

Pos	Part Number	Description	Remark	Qty	Model
21	9A1 107 035 01	lid		1	
22	900 385 019 01	torx screw M6 X 20		5	
23	9A1 107 215 02	support filler tube		1	
24	900 385 041 01	torx screw M6 X 20		X	
25	999 507 886 40	hose holder		1	

Pos	Part Number	Description	Remark	Qty	Model

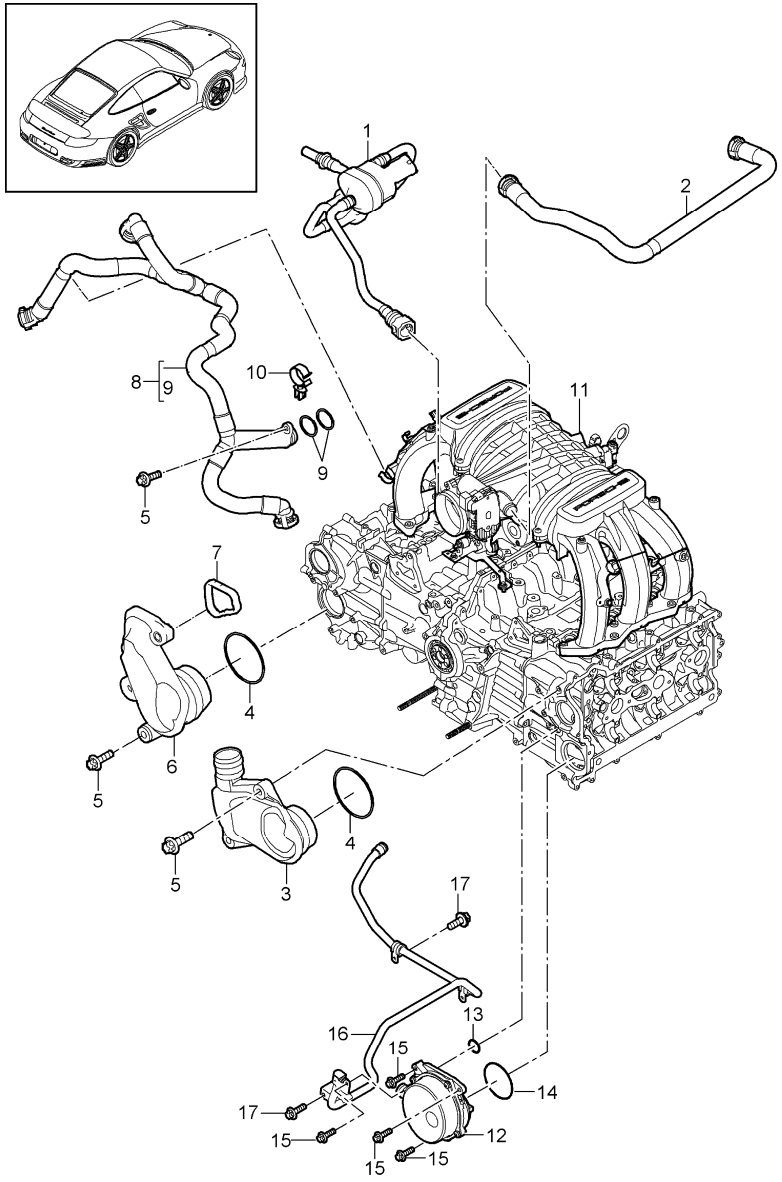

Pos	Part Number	Description	Remark	Qty	Model
		crankcase bleeding tank ventilation vacuum pump			
3	9A1 105 038 00	lid crankcase bleeding cyl. 4 - 6		1	
4	999 707 636 40	o-ring 44,0 X 3,5N		2	
5	900 385 019 01	torx screw BM6 x 20		6	
6	9A1 105 039 00	lid crankcase bleeding cyl. 1 - 3		1	
7	9A1 105 339 00	gasket for lid crankcase		1	
8	9A1 107 525 00	vent line crankcase		1	
9	999 707 639 40	o-ring		2	
10	999 507 867 40	support		1	
12	9A1 110 090 03	vacuum pump		1	
13	999 701 504 40	o-ring 10 x 2,5		1	
14	999 701 505 40	o-ring 54 x 2,5		1	
15	900 385 019 01	torx screw M6 x 20		3	
16	9A1 110 055 02	vacuum line		1	
17	900 385 041 01	torx screw M6 x12		4	

Model	Year	MG	SG	Illustration	Restrictions	UPD	20:02	06.02.2010
997T2	2010	1	05	105-00		248	USA / CANADA	

PORSCHE PET PORSCHE

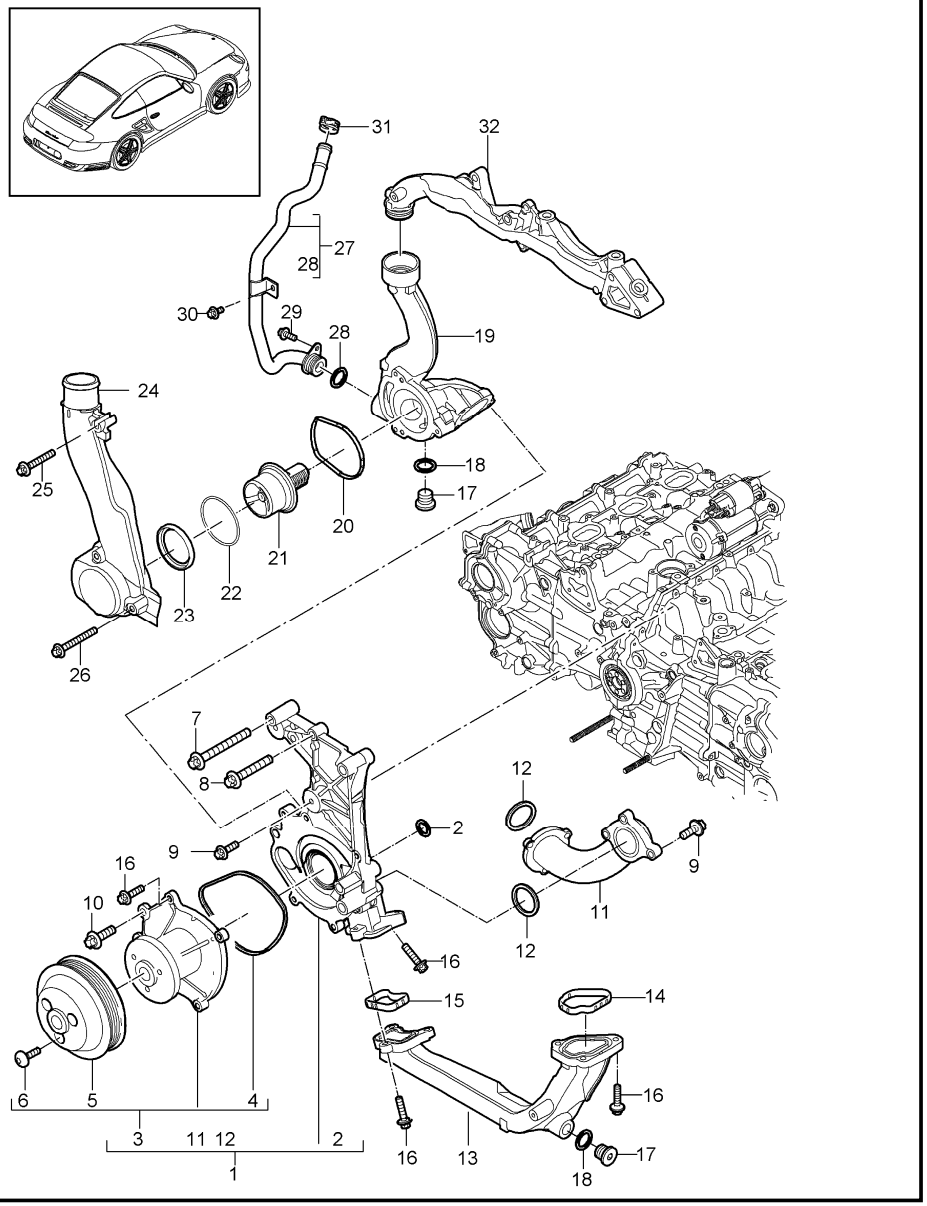

Pos	Part Number	Description	Remark	Qty	Model
		water pump thermostat housing			
1	9A1 106 038 71	water pump complete		1	
2	999 707 604 40	o-ring 34,0 X 3,0		2	
3	9A1 106 048 70	water pump		1	
5	9A1 106 248 00	pulley		1	
6	999 073 104 01	torx screw M8 X 16		3	
7	900 385 115 01	torx screw M8 X 70		X	
8	900 385 071 01	torx screw M8 X 50		X	
9	900 385 019 01	torx screw M6 X 20		3	
10	900 385 098 01	torx screw M8 X 25		1	
11	9A1 106 238 00	water tube		1	
12	9A1 106 215 00	gasket water tube		2	
13	9A1 106 125 01	water tube		1	
14	9A1 106 326 00	gasket water tube		1	
15	9A1 106 325 00	gasket water tube		1	
16	900 385 072 01	torx screw M6 X 25		16	
17	900 219 018 30	screw plug M14 X 1,5		2	
18	900 123 104 30	sealing ring 14 X 18		2	
19	9A1 106 150 01	housing thermostat		1	
20	9A1 106 305 00	gasket thermostat		1	
21	9A1 106 225 01	thermostat insert		1	

Pos	Part Number	Description	Remark	Qty	Model
22	999 707 625 40	o-ring 59,0 X 5,2		1	
23	9A1 106 558 00	sealing ring		1	
24	9A1 106 111 01	water guide housing		1	
25	900 385 045 01	torx screw M6 X 40		4	
26	900 385 070 01	torx screw M6 X 50		3	
27	9A1 106 850 03	water line		1	
28	999 707 517 40	o-ring 22 X 3		2	
29	900 385 009 01	torx screw M6 X 16		1	
30	900 385 041 01	torx screw M6 X 12		1	
31	999 512 683 09	clip		1	
32		unit carrier see group 1/05/03		1	

Model	Year	MG	SG	Illustration	Restrictions	UPD	20:03	06.02.2010
997T2	2010	1	05	105-03		248	USA / CANADA	

PORSCHE PET PORSCHE

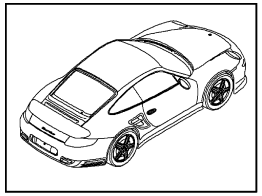

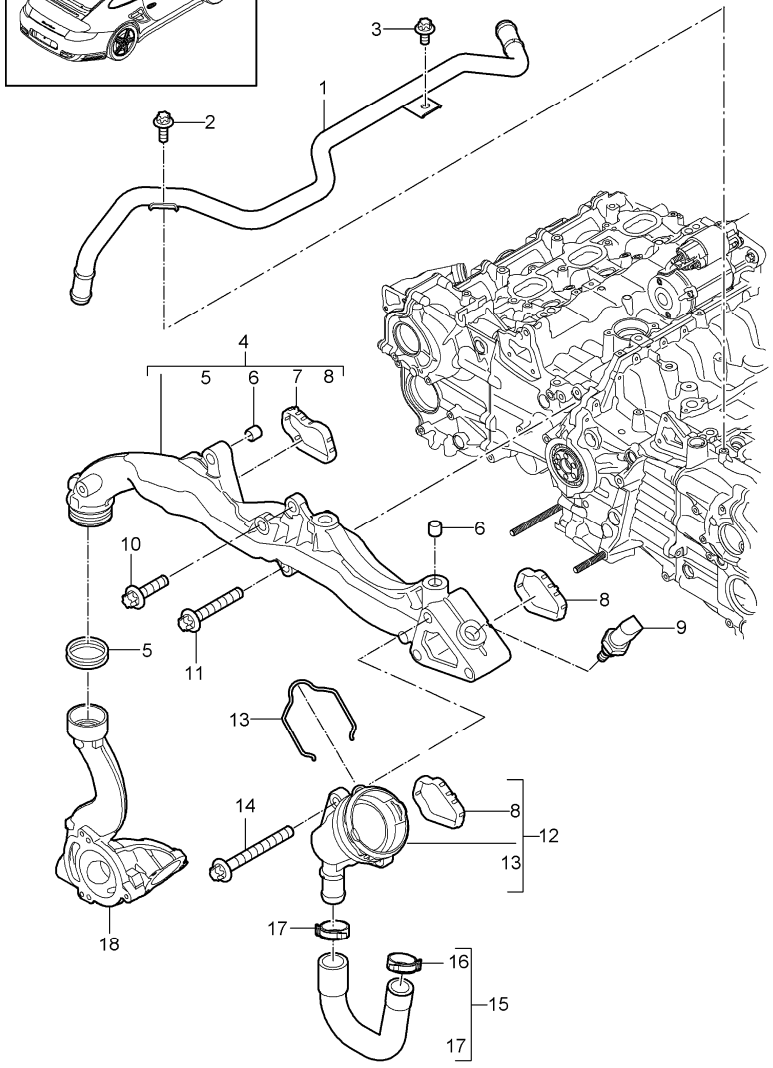

Pos	Part Number	Description	Remark	Qty	Model
		unit carrier water tube			
1	9A1 106 810 01	hot air duct supply		1	
2	900 385 009 01	torx screw 6 X 16		1	
3	900 385 041 01	torx screw M6 X 12		1	
4	9A1 102 112 02	unit carrier		1	
5	999 707 589 40	o-ring 31,0 X 3,0		2	
6	999 095 063 01	dowel sleeve 11 M6 X 10		2	
7	9A1 102 312 00	gasket cyl. 1 - 3		1	
8	9A1 102 322 00	gasket cyl. 4 - 6		2	
9	997 606 420 01	temperature sensor use also: 900.123.111.20		1	
10	900 385 116 01	torx screw M8 X 30		2	
11	900 385 071 01	torx screw M8 X 50		2	
12	9A1 106 131 00	connection piece		1	
13	997 106 802 03	spring		1	
14	900 385 115 01	torx screw M8 X 70		3	
15	9A1 106 660 00	water hose supply		1	
16	999 512 601 09	hose clamp 23 X 12		1	
17	999 512 603 09	hose clamp 26 X 12		1	
18	900 123 111 20	sealing ring copper temperature sensor		1	

Pos	Part Number	Description	Remark	Qty	Model
19		housing thermostat see group 1/05/00			

Pos	Part Number	Description	Remark	Qty	Model

Model	Year	MG	SG	Illustration	Restrictions	UPD	20:03	06.02.2010
997T2	2010	1	05	105-05		248	USA / CANADA	

PORSCHE PET PORSCHE

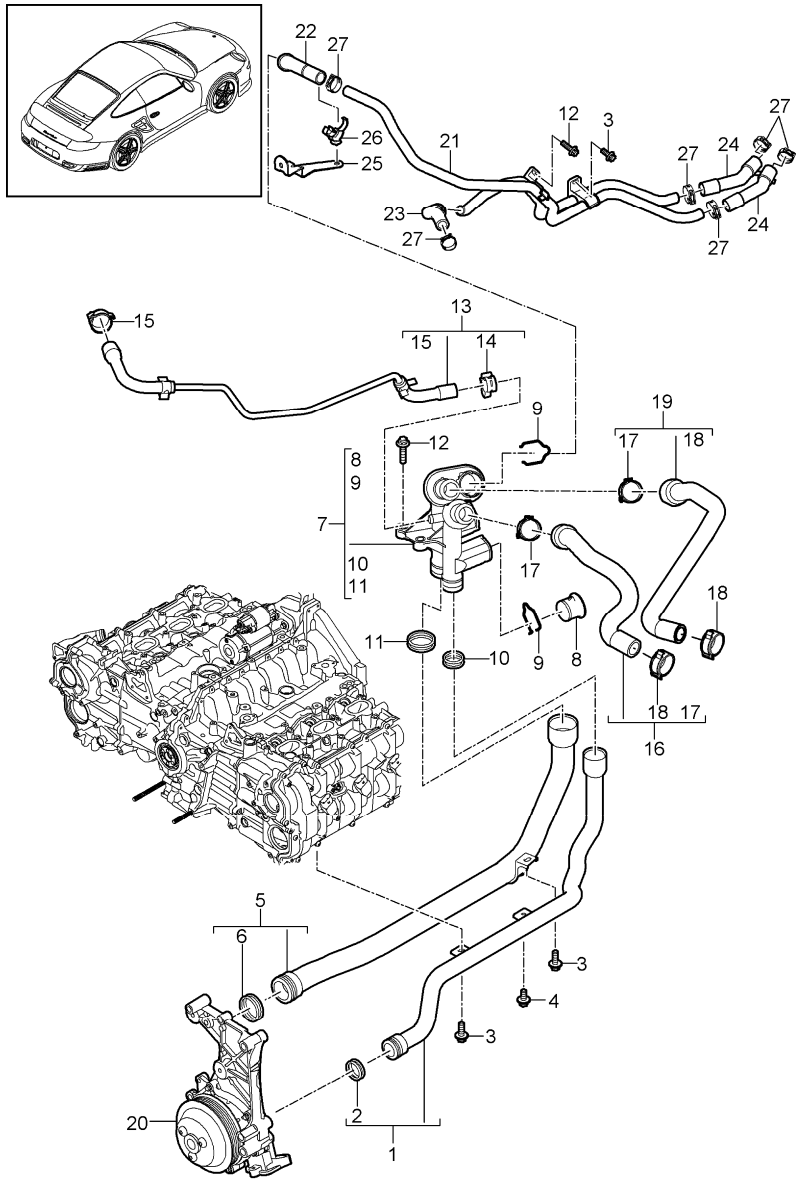

Pos	Part Number	Description	Remark	Qty	Model
		connection water tube			
1	9A1 106 620 01	water tube intake		1	
2	999 707 517 40	o-ring 22 X 3		4	
3	900 385 009 01	torx screw M6 X 16		4	
4	900 385 041 01	torx screw M6 X 12		1	
5	9A1 106 625 01	water tube return line		1	
6	999 707 589 40	o-ring 31 X 3		4	
7	9A1 106 010 01	connection		1	
8	9A1 106 546 00	stopper		3	
9	997 106 802 04	spring clip		3	
10	999 707 517 40	o-ring 22 X 3		2	
11	999 707 589 40	o-ring 31 X 3		2	
12	900 385 072 01	torx screw M6 X 25		3	
13	9A1 106 549 01	vent line		1	
14	999 512 699 01	hose clamp 18 X 12 with clip		1	
15	999 512 741 01	hose clamp 19 X 12		1	
17	999 512 608 09	hose clamp 32 X 12		1	
18	999 512 589 09	hose clamp 25 X 12		2	
20		water pump see group 1/05/00		1	
21	997 106 181 72	heater pipeline		1	I480

Pos	Part Number	Description	Remark	Qty	Model
(21)	997 106 182 32	heater pipeline		1	I250
22	997 106 822 31	hose return line		1	I480
23	997 106 812 30	hose supply		1	I480
24	997 106 212 32	hose		2	I480
25	997 106 533 31	support		1	
26	999 511 244 40	clip		1	
27	999 512 658 09	hose clamp 27 x 12		4	

Model	Year	MG	SG	Illustration	Restrictions	UPD	20:03	06.02.2010
997T2	2010	1	05	105-06		248	USA / CANADA	

PORSCHE PET PORSCHE

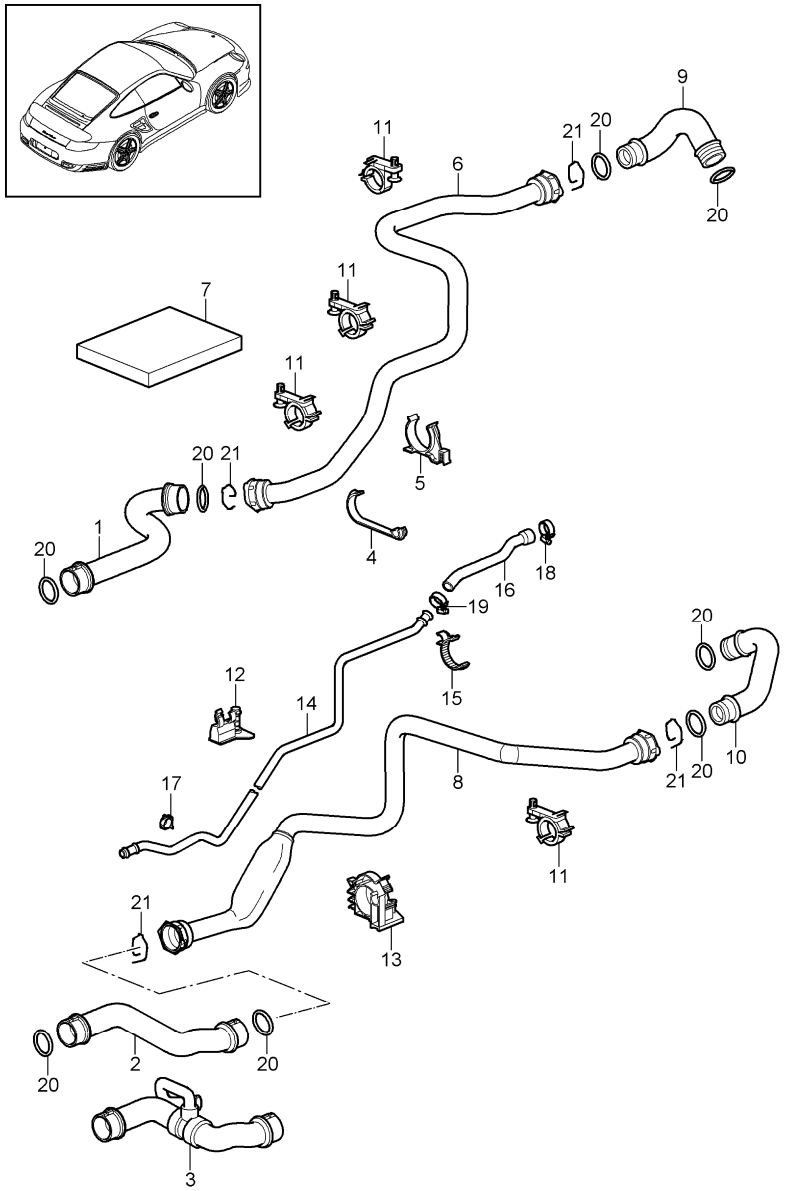

Pos	Part Number	Description	Remark	Qty	Model
		water cooling 1			
1	997 106 740 06	water hose supply		1	
2	997 106 741 07	water hose return line		1	I480
3	997 106 742 71	water hose return line		1	I250
4	997 106 426 00	support		1	
5	997 106 427 01	support		1	
6	997 106 610 31	cooling water tube supply		1	
8	997 106 809 01	cooling water tube return line		1	
9	997 106 831 31	water hose supply		1	
10	997 106 832 31	water hose return line		1	
11	996 106 417 73	support		4	
12	997 106 428 01	support		1	
13	997 106 429 01	support		1	
14	997 106 681 32	vent line		1	
15	997 106 512 03	connection piece		1	
16	997 106 251 01	breather hose		1	
17	999 507 743 40	cable holder 12,0		1	
18	999 512 656 09	hose clamp 25 X 12		1	
19	999 512 653 09	hose clamp 20 X 12		1	
20	996 106 801 03	o-ring		8	
21	997 106 802 03	spring		4	

Model	Year	MG	SG	Illustration	Restrictions	UPD	20:03	06.02.2010
997T2	2010	1	05	105-10		248	USA / CANADA	

PORSCHE PET PORSCHE

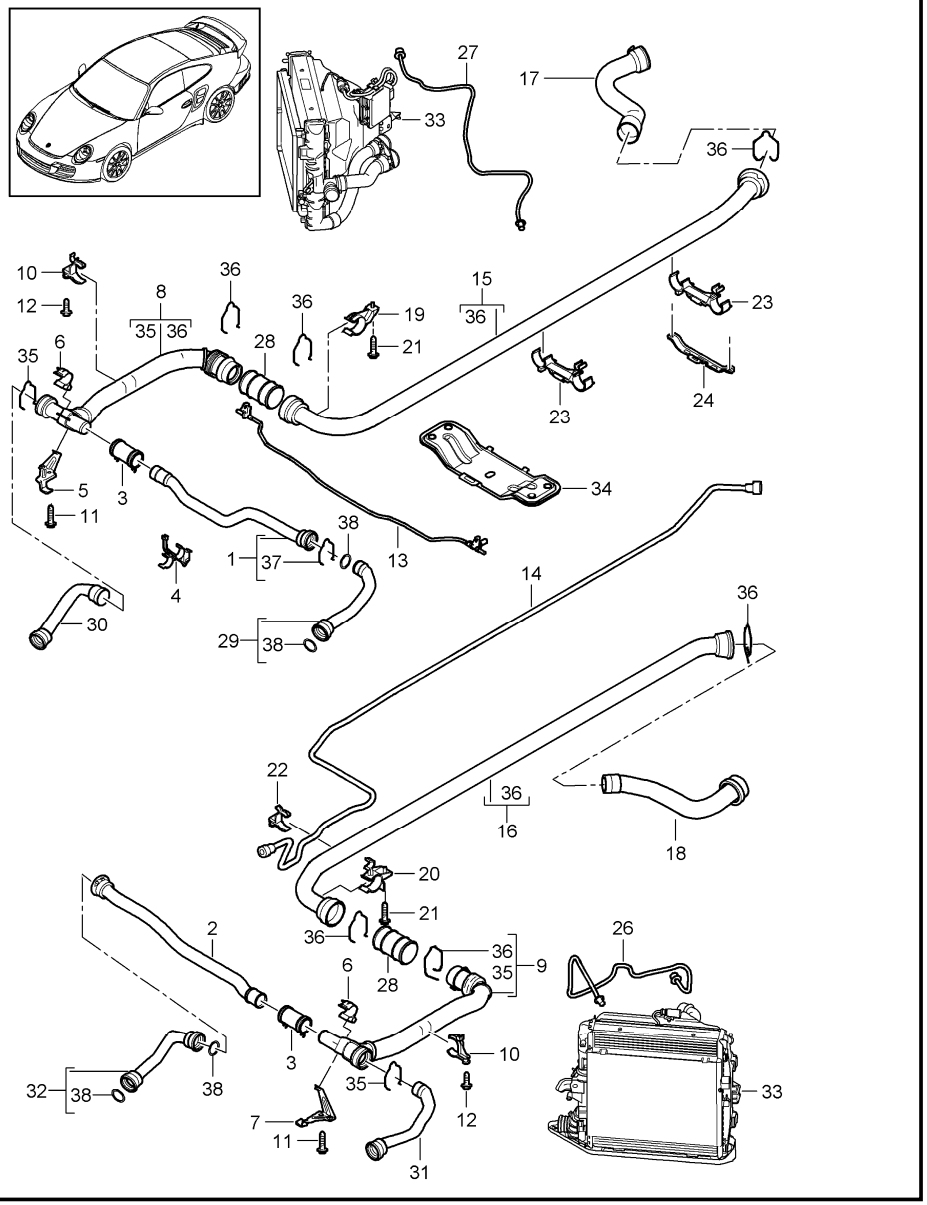

Pos	Part Number	Description	Remark	Qty	Model
		water cooling 2			
1	997 106 711 02	water tube cross tube supply		1	
2	997 106 720 02	water tube cross tube return line		1	
3	997 106 723 06	water hose		2	
4	997 106 525 01	support water tube cross tube centre		1	
5	997 106 574 02	support distributor tube right		1	
6	997 106 526 01	support cross tube upper		2	
7	997 106 573 02	support distributor tube left		1	
8	997 106 752 04	distributor tube supply		1	
9	997 106 751 04	distributor tube return line		1	
10	997 106 413 01	support distributor tube		2	
(10)	997 106 413 01	support distributor tube	/R	1	I601
(10)	997 106 414 00	support distributor tube	/L	1	I601
11	900 378 013 09	hexagon-head bolt M6 X 25		2	
12	900 378 036 09	hexagon-head bolt M6 X 12		2	
13	997 106 767 02	vent line transverse		1	
14	997 106 227 03	vent line tunnel		1	

Pos	Part Number	Description	Remark	Qty	Model
15	997 106 651 03	water tube supply tunnel		1	
16	997 106 652 03	return pipe tunnel		1	
17	997 106 520 02	support bulkhead right		1	
18	997 106 521 01	support bulkhead left		1	
19	900 378 035 01	hexagon-head bolt M6 X 16		2	
20	997 106 512 03	connection piece vent line		1	
21	997 106 540 02	support tunnel		2	
22	997 106 551 03	sleeve		2	
23		see illustrations 1/05/05		X	
24		see illustrations 1/05/05		X	
25	997 106 865 02	line	/L	1	
26	997 106 866 02	line	/R	1	
27	997 106 623 03	water hose supply	/L	1	
28	997 106 627 03	water hose supply	/R	1	
29	997 106 728 03	water hose return line	/L	1	
30	997 106 624 03	water hose return line	/R	1	
31		see illustrations 1/05/15		1	

Pos	Part Number	Description	Remark	Qty	Model

Model	Year	MG	SG	Illustration	Restrictions	UPD	20:03	06.02.2010
997T2	2010	1	05	105-15		248	USA / CANADA	

Pos	Part Number	Description	Remark	Qty	Model
		water cooling 3			
1	996 106 131 74	radiator	/L	1	
(1)	996 106 132 72	radiator	/R	1	
(2)	997 624 127 02	fan	/L	1	
(2)	997 624 128 02	fan	/R	1	
3	997 624 141 00	air box		2	
4	999 507 085 40	clip		2	
5	996 624 175 00	bush		6	
6	996 624 173 00	rubber mounting		6	
7	996 573 711 01	frame		2	
8	900 377 010 09	hexagon nut		6	
9	999 209 049 02	spacer sleeve		6	
10	997 106 165 02	bracket	/L	1	
(10)	997 106 166 02	bracket	/R	1	
11	997 106 265 01	bracket	/L	1	
(11)	997 106 266 01	bracket	/R	1	
12	997 106 365 02	support	/L	1	
(12)	997 106 366 02	support	/R	1	
13	997 106 631 01	water hose supply	/L	1	
(13)	997 106 632 01	water hose supply	/R	1	
14	997 106 635 02	water hose return line	/L	1	
(14)	997 106 636 01	water hose return line	/R	1	
15	996 106 802 16	retainer spring SC 32		4	
16	996 106 802 15	retainer spring SC 08		2	
17	997 106 255 02	connecting piece		2	
18	997 575 321 01	air duct	/L	1	
(18)	997 575 322 01	air duct	/R	1	

Model	Year	MG	SG	Illustration	Restrictions	UPD	20:03	06.02.2010
997T2	2010	1	05	105-15		248	USA / CANADA	

Pos	Part Number	Description	Remark	Qty	Model
19	997 106 455 00	support	/L	1	
20	997 106 456 00	support	/R	1	
21	999 702 214 40	grommet 14 X 20,5 X 7,5		4	
22	999 025 255 02	washer		12	
23	999 166 017 01	kl-lock		6	
24	997 575 341 01	air duct	/L	1	
(24)	997 575 342 01	air duct	/R	1	
25	999 919 134 09	oval-head screw 6,0 X 16		12	
26	900 378 123 01	hexagon-head bolt M 8 X 12		2	
27	900 378 035 01	hexagon-head bolt M 6 X 16		6	
28	999 073 231 09	tapping screw 4,8 X 16		12	
29	999 591 329 01	speed nut ST 4,8		10	
30	999 591 350 01	speed nut ST 4,8		2	
31	999 591 699 01	speed nut ST 4,8		8	
32		control unit see group 9/01/03 Pos.22		1	
33	900 377 010 01	hexagon nut M 6		2	
34	997 106 565 00	adapter		2	
35	999 507 126 40	hose holder		1	
36	996 106 801 02	o-ring		4	
37	996 624 157 00	air flap	/L	1	
(37)	996 624 158 00	air flap	/R	1	
38	996 624 159 00	air flap	/L	1	
(38)	996 624 160 00	air flap	/R	1	
39	996 624 161 00	air flap	/L	1	
(39)	996 624 162 00	air flap	/R	1	

Model	Year	MG	SG	Illustration	Restrictions	UPD	20:03	06.02.2010
997T2	2010	1	05	105-15		248	USA / CANADA	

Pos	Part Number	Description	Remark	Qty	Model
40	996 624 163 00	air flap	/L	1	
(40)	996 624 164 00	air flap	/R	1	
41	N 906 487 02	tapping screw ST 4,8 X 16		4	
--	997 106 113 70	protection cover radiator	/L	1	
--	997 106 114 70	protection cover radiator	/R	1	

Model	Year	MG	SG	Illustration	Restrictions	UPD	20:03	06.02.2010
997T2	2010	1	05	105-17		248	USA / CANADA	

PORSCHE PET PORSCHE

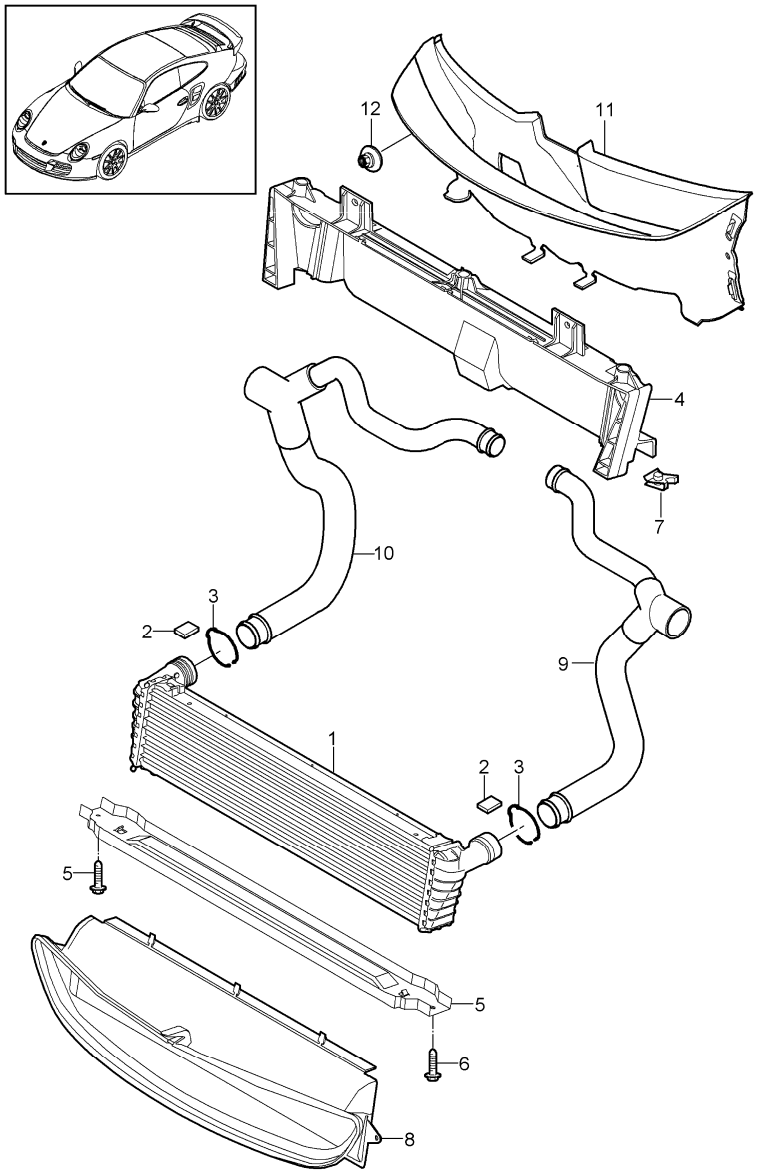

Pos	Part Number	Description	Remark	Qty	Model
		radiator centre			
1	997 106 038 04	radiator		1	
2	997 106 437 02	rubber mounting		4	
3	997 106 802 00	spring SCB-26		2	
4	997 504 487 01	frame radiator		1	
5	997 504 485 01	profile rail radiator lower		1	
6	900 378 035 01	hexagon-head bolt M 6 X 16		2	
7	999 591 882 01	speed nut M 6		2	
8	997 575 141 01	air duct		1	
9	997 106 635 02	water hose return line		1	
10	997 106 632 01	water hose supply		1	

Model	Year	MG	SG	Illustration	Restrictions	UPD	20:04	06.02.2010
997T2	2010	1	05	105-20		248	USA / CANADA	

PORSCHE PET PORSCHE

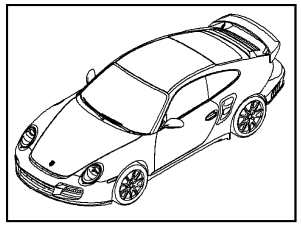

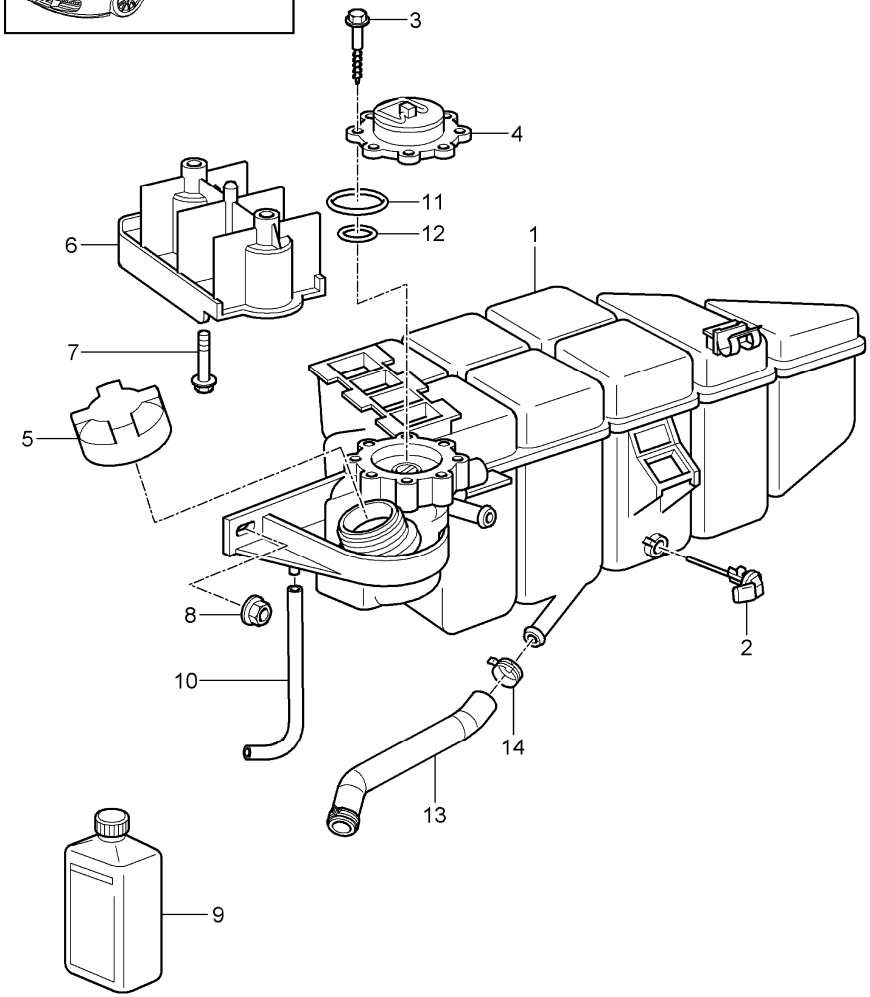

Pos	Part Number	Description	Remark	Qty	Model
		water cooling 4			
1	996 106 157 03	water reservoir		1	
2	997 641 503 00	switch		1	
3	999 919 058 02	hexagon-head bolt 5,0 X 40		8	
4	996 106 347 02	bleeder valve		1	
5	996 106 447 01	lid see technical manual group 1 Nr.190101		1	
6	996 106 405 52	support		1	
7	900 378 141 09	hexagon-head bolt M 6 X 35		2	
8	999 076 071 02	hexagon nut M 6		1	
9	000 043 301 03	antifreeze 1 LTR. container		X	
(9)	000 043 301 05	antifreeze 1 GALLON container		X	
(9)	000 043 301 04	antifreeze 20 LTR. container		X	
10	996 106 297 05	overflow hose		1	
11	999 707 370 40	o-ring 47 X 4		1	
12	999 707 371 40	o-ring 17 X 4		1	
13	997 106 851 34	water hose		1	
14	999 512 660 09	hose clamp 29 X 12		1	

Model	Year	MG	SG	Illustration	Restrictions	UPD	20:04	06.02.2010
997T2	2010	1	06	106-00		248	USA / CANADA	

PORSCHE PET PORSCHE

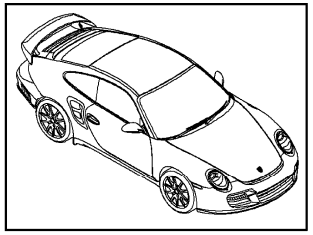

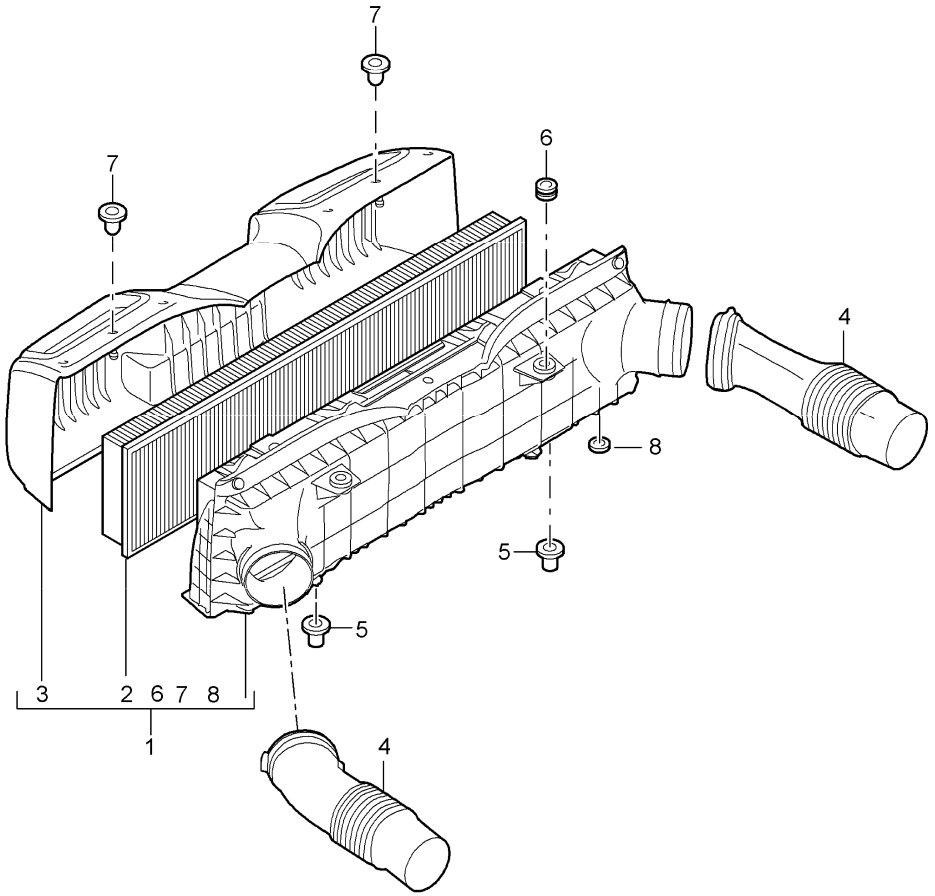

Pos	Part Number	Description	Remark	Qty	Model
		air cleaner			
1	997 110 028 30	air cleaner		1	
2	997 110 131 30	air cleaner cartridge		1	
3	997 110 122 30	air cleaner		1	
4	997 606 125 00	mass air flow meter		2	
5		oval-head screw 5 X 21 part number in preparation		8	
6	999 701 089 40	o-ring		1	
7	999 702 246 40	grommet 12,0 X 17,0 X 3		2	
8	999 703 267 40	bush		1	
9	997 110 239 00	mounting		4	
10	997 110 238 00	rubber stop		3	

Model	Year	MG	SG	Illustration	Restrictions	UPD	20:04	06.02.2010
997T2	2010	1	07	107-00		248	USA / CANADA	

Pos	Part Number	Description	Remark	Qty	Model
		throttle body			
1	**997 605 115 01**	**throttle body**		**1**	
2	**997 110 319 00**	**gasket**		**1**	

Model	Year	MG	SG	Illustration	Restrictions	UPD	20:04	06.02.2010
997T2	2010	1	07	107-05		248	USA / CANADA	

PORSCHE PET PORSCHE

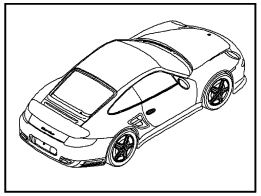

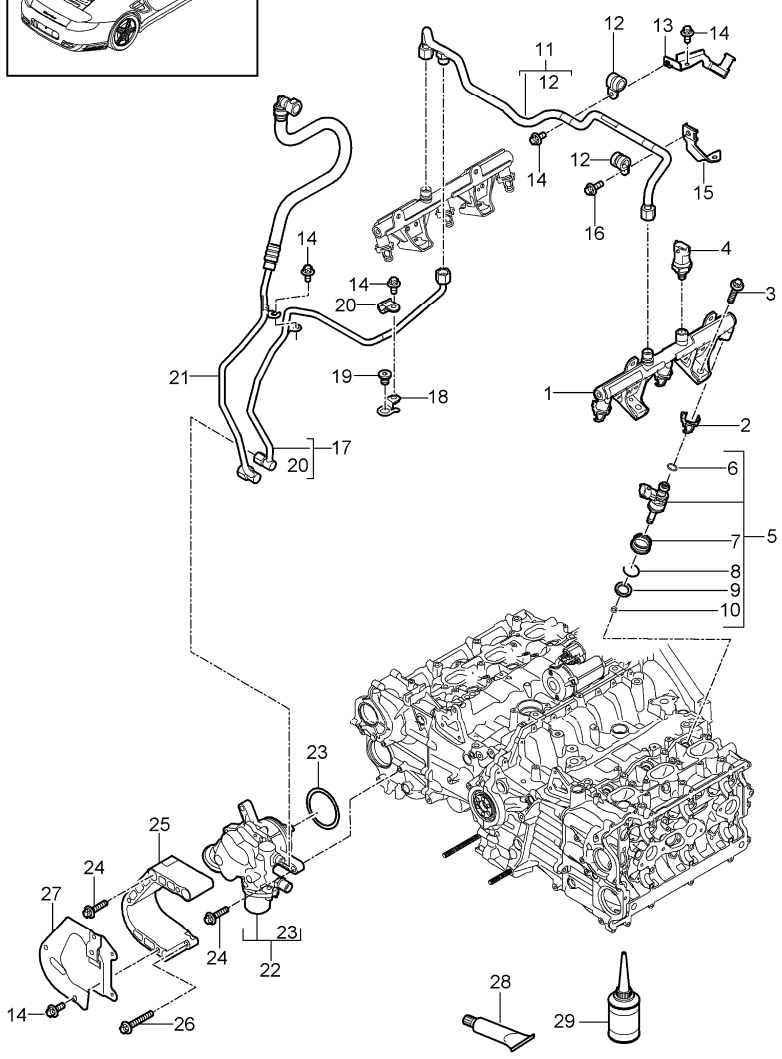

Pos	Part Number	Description	Remark	Qty	Model
		fuel collection pipe high-pressure pump			
1	9A1 110 859 71	fuel collection pipe cyl. 1 - 3		1	
1	9A1 110 860 72	fuel collection pipe cyl. 4 - 6		1	
2	9A1 110 866 01	fixing device fuel collection pipe high-pressure injector		6	
3	900 385 048 01	torx screw M6 X 30		8	
5	9A1 110 128 70	high-pressure injector		6	
6	999 701 112 40	o-ring 7,52 X 3,51 see technical manual group 24		6	
7	9A1 110 524 02	bellows high-pressure injector		6	
8	900 906 011 02	circlip A 14		6	
9	9A1 110 520 01	spacer ring		6	
10	999 704 020 90	sealing ring 6,3 X 2,8		6	
11	9A1 110 092 70	pressure line fuel collection pipe see technical manual group 24		1	
12	999 511 803 01	hose clamp D1 11X 15		2	
13	9A1 110 945 70	support pressure line		1	
14	900 385 009 01	torx screw M6 X 16		X	
15	9A1 110 947 01	support pressure line		1	
16	900 385 009 01	torx screw M6 X 16		1	

Pos	Part Number	Description	Remark	Qty	Model
17	9A1 110 095 70	pressure line high-pressure pump t-piece see technical manual group 24		1	
18	9A1 110 940 01	support pressure line		1	
19	900 219 006 01	screw plug M12 X 1,5		1	
20	999 511 153 01	hose clamp D1 8 X 15		1	
21	9A1 110 905 71	fuel line see technical manual group 24		1	
22	9A1 110 315 70	high-pressure pump		1	
23	999 707 643 40	o-ring 55,25 x 2,62		1	
24	900 385 072 01	torx screw M6 X 25		4	
25	9A1 110 880 70	cover high-pressure pump		1	
26	900 385 045 01	torx screw M6 X 40		1	
27	9A1 110 881 70	heat protection high-pressure pump		1	
28	000 043 207 35	grease 30 ml		1	
29	000 043 207 36	lubricants 50 ml		1	

Pos	Part Number	Description	Remark	Qty	Model

Model	Year	MG	SG	Illustration	Restrictions	UPD	20:04	06.02.2010
997T2	2010	1	07	107-10		248	USA / CANADA	

PORSCHE PET PORSCHE

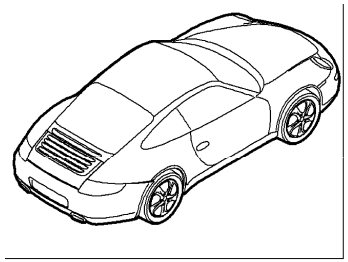

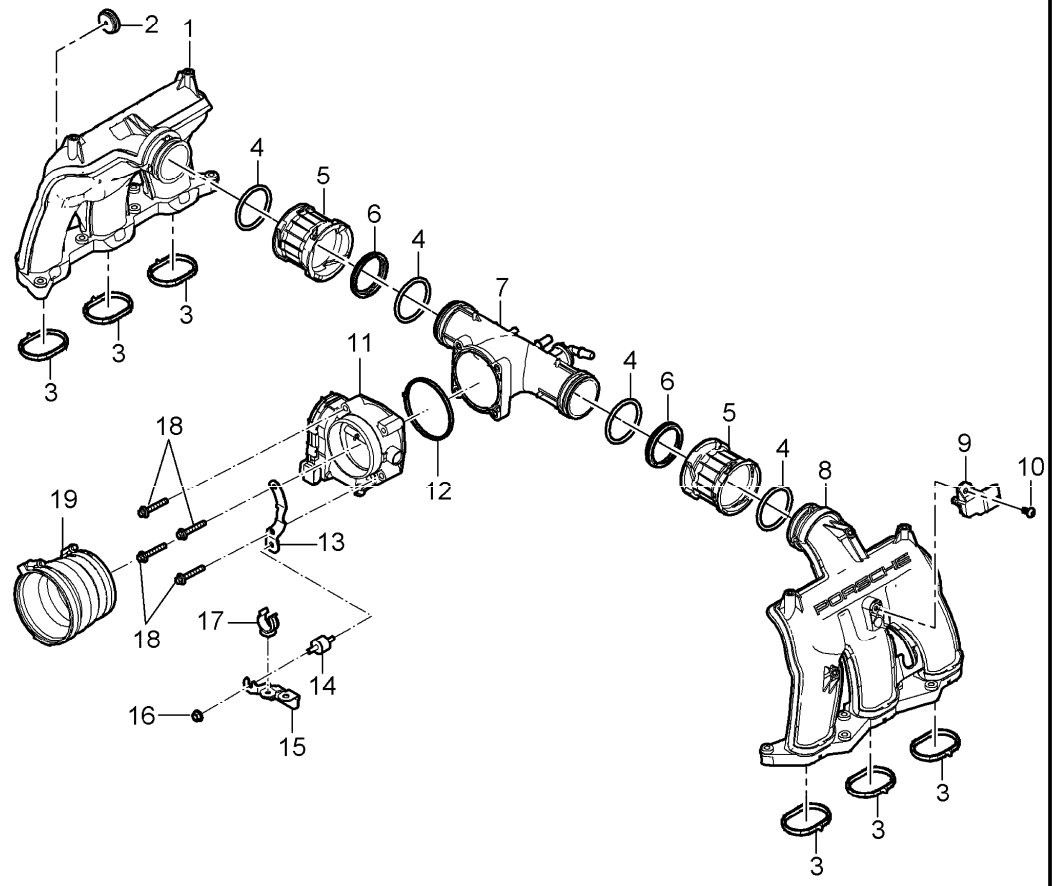

Pos	Part Number	Description	Remark	Qty	Model
		intake distributor throttle body			
1	9A1 110 117 72	intake distributor		1	
2	993 110 530 01	grommet		1	
3	9A1 110 215 01	gasket		6	
4	999 707 642 40	o-ring 53,00 x 5,00		4	
5	9A1 110 222 71	sleeve		2	
6	9A1 110 223 70	sealing ring		2	
7	9A1 110 120 74	distributor tube		1	
8	P 9A1 110 118 71	intake distributor		1	
9	996 606 180 00	sensor boost pressure		1	
10	999 919 241 01	lens-head screw M 6 x 15		1	
11	997 605 115 01	throttle body		1	
12	997 110 319 00	gasket for distributor tube		1	
13	9A1 110 290 71	bracket		1	
14	999 703 239 01	damping piece		1	
15	9A1 110 292 70	support		1	
16	900 377 010 01	hexagon nut M6		1	
17	999 507 930 40	hose holder 21,0 - 23,0		1	
18	900 385 045 01	torx screw M 6 x 40		4	
19	997 110 647 73	rubber sleeve		1	

Model	Year	MG	SG	Illustration	Restrictions	UPD	20:05	06.02.2010
997T2	2010	1	07	107-20		248	USA / CANADA	

PORSCHE PET PORSCHE

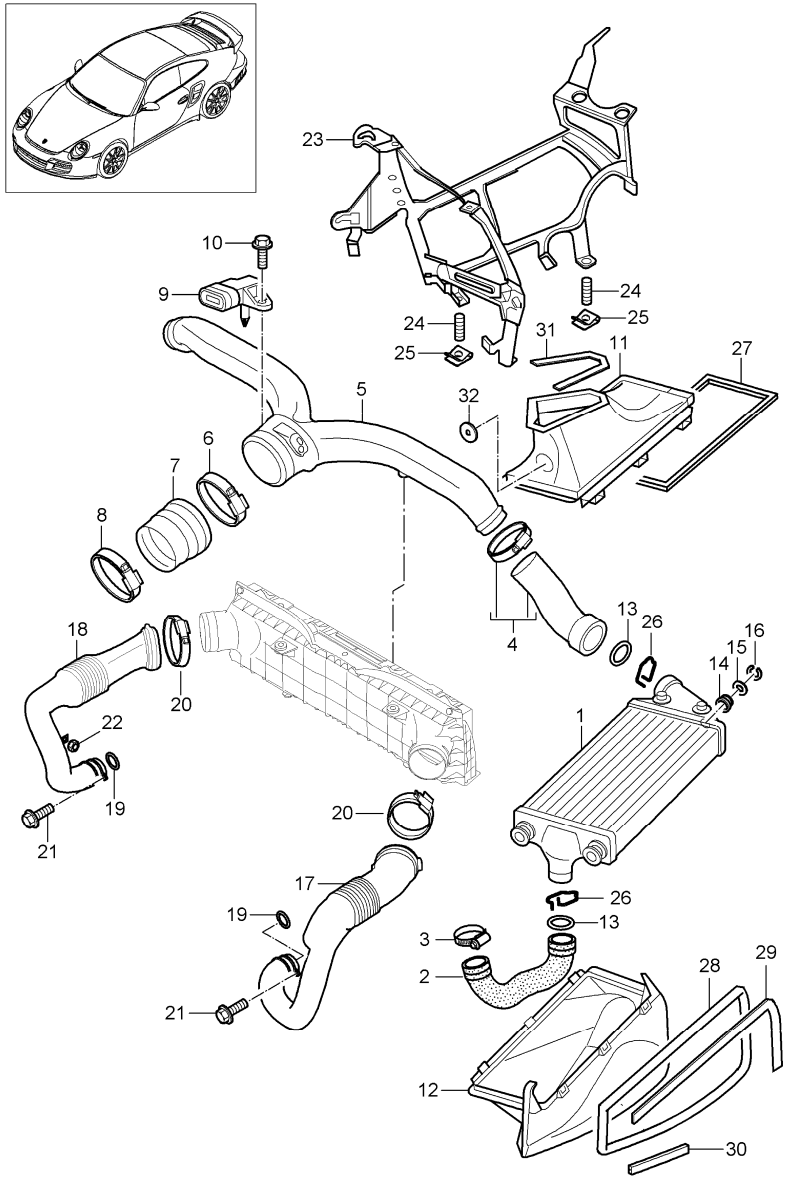

Pos	Part Number	Description	Remark	Qty	Model
		turbocharging			
1	997 110 639 70	charge air cooler	/L	1	
(1)	997 110 640 70	charge air cooler	/R	1	
2	997 110 635 71	pressure hose	/L	1	
(2)	997 110 636 71	pressure hose	/R	1	
3	999 512 348 01	hose clamp 40 - 60		2	
4	997 110 645 70	pressure hose for pressure pipe	/L	1	
(4)	997 110 644 70	pressure hose for pressure pipe	/R	1	
5	997 110 646 73	pressure pipe		1	
6	999 512 629 00	hose clamp 90 - 110		1	
(7)	997 110 647 73	rubber sleeve		1	
8	999 512 542 00	hose clamp 80 - 100		1	
9	996 606 180 00	sensor		1	
10	999 919 241 01	lens-head screw M 6 X 15		2	
11	997 575 657 01	air duct	/L	1	
(11)	997 575 658 01	air duct	/R	1	
12	997 575 471 01	air duct	/L	1	
	01C	satin black			
(12)	997 575 472 01	air duct	/R	1	
	01C	satin black			
13	996 106 801 06	sealing ring		4	
14	996 110 638 70	rubber mounting		8	
15	999 025 255 01	washer 16 X 32 X 0,5		8	
16	900 116 015 09	lock washer		8	

Pos	Part Number	Description	Remark	Qty	Model
17	9A1 110 623 73	intake pipe	/L	1	
18	9A1 110 624 73	intake pipe	/R	1	
19	999 707 564 40	o-ring 50.00 X 2,50		2	
20	999 512 698 01	hose clamp 70 - 90/9		2	
21	900 385 019 01	torx screw M 6 X 20		4	
22	900 377 010 02	hexagon nut M 6		1	
23	997 504 253 01	bracket	/L	1	
(23)	997 504 254 01	bracket	/R	1	
24	999 516 023 05	threaded bolt		8	
25	999 507 668 02	speed nut ST 4,8		12	
26	997 106 802 05	retainer spring D 41		4	
27	997 575 869 01	gasket charge air cooler	/L/R	1	
28	997 575 890 00	gasket air-guide cowl 1110 mm	/L/R	1	
31	997 575 789 00	plastic foam strip air-guide cowl	/L/R	1	
32	997 575 777 00	lid air-guide cowl	/L/R	1	

Pos	Part Number	Description	Remark	Qty	Model

Model	Year	MG	SG	Illustration	Restrictions	UPD	20:05	06.02.2010
997T2	2010	1	08	108-05		248	USA / CANADA	

PORSCHE PET PORSCHE

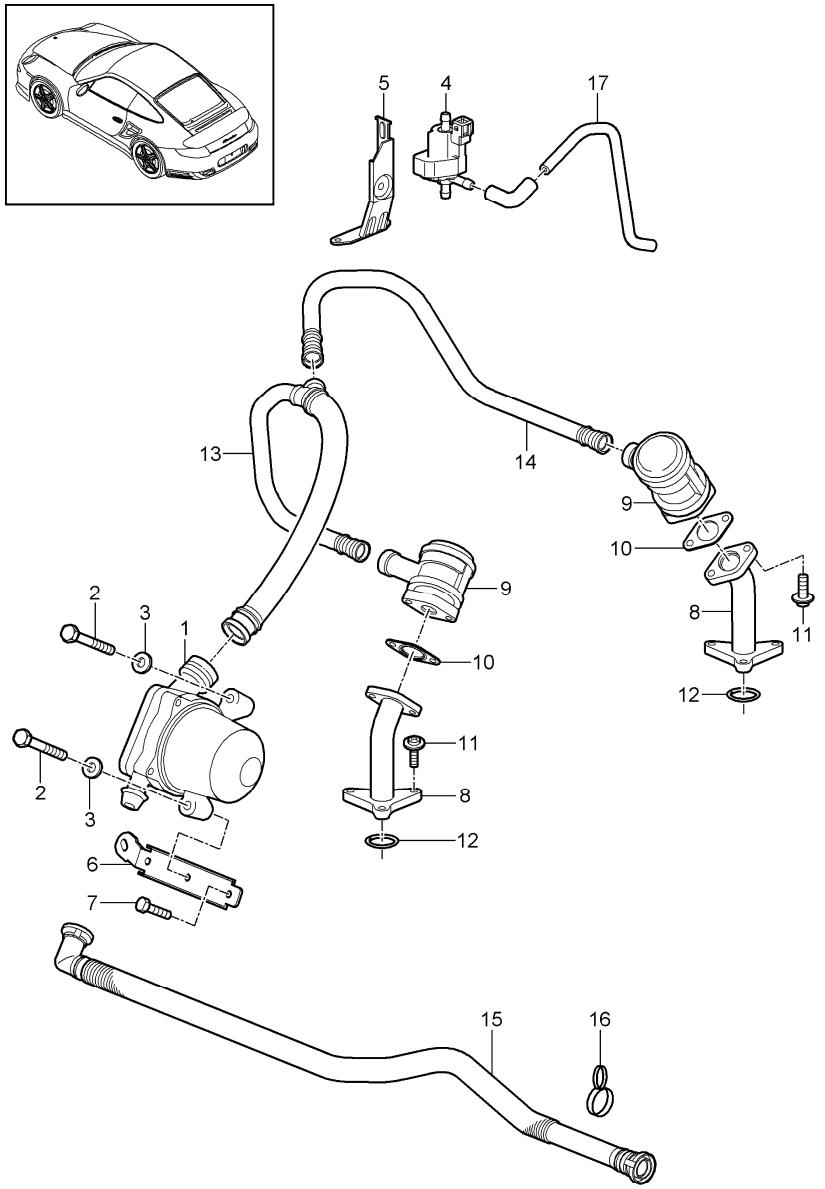

Pos	Part Number	Description	Remark	Qty	Model
		air injection			
1	9A1 605 104 71	secondary pump		1	
2	9A1 113 340 71	pressure line		1	
3	997 113 203 71	valve		2	
4	993 113 258 51	gasket		2	
5	9A1 113 118 74	connecting line cyl. 4 - 6		1	
6	900 385 019 01	torx screw M 6 x 20		6	
7	900 385 009 01	torx screw M 6 x 16		8	
8	9A1 113 258 00	gasket		2	
9	9A1 113 017 72	connecting line cyl. 1 - 3		1	
10	9A1 113 106 76	support upper		1	
11	900 385 041 01	torx screw M 6 X 12		6	
12	9A1 113 105 75	support lower		1	
13	9A1 113 101 72	bracket lower		1	
14	999 025 268 01	washer 6,4 x 18 x 1,2		2	

Model	Year	MG	SG	Illustration	Restrictions	UPD	20:05	06.02.2010
997T2	2010	1	09	109-00		248	USA / CANADA	

PORSCHE PET PORSCHE

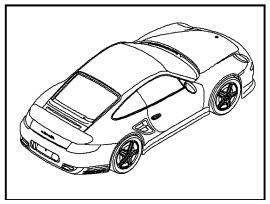

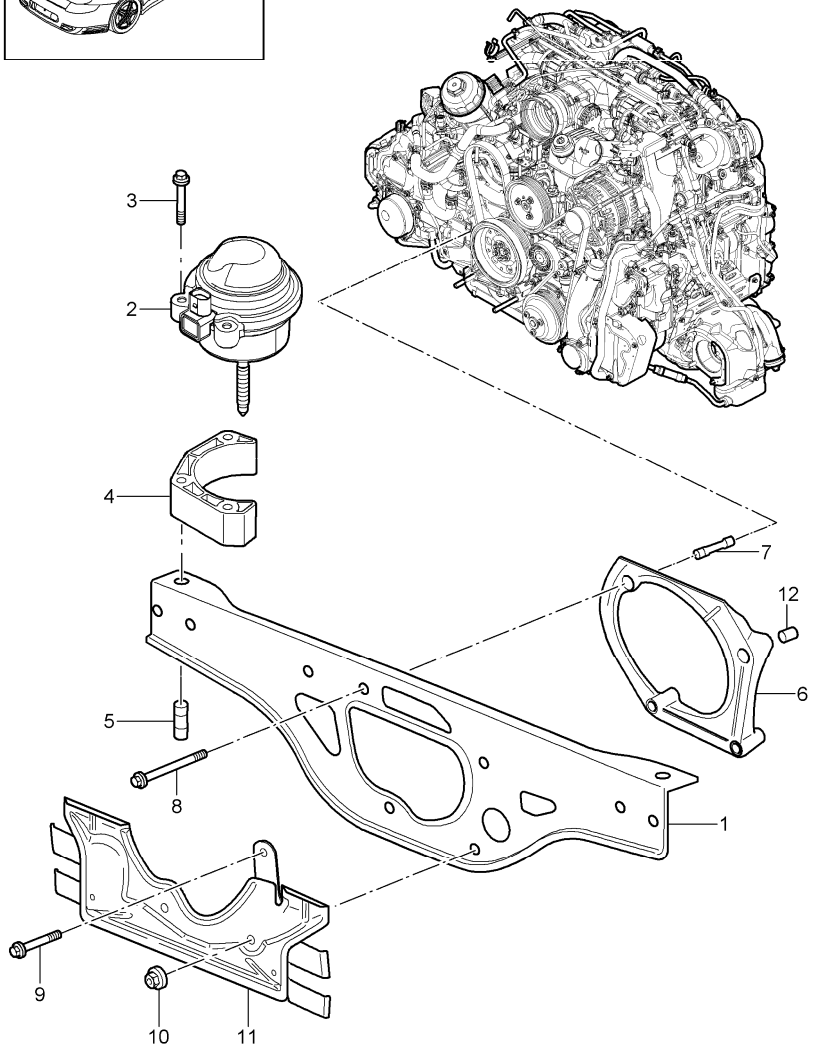

Pos	Part Number	Description	Remark	Qty	Model
		engine suspension			
1	996 375 013 01	engine carrier		1	
2	997 375 049 07	hydraulic mount		2	CABRIO
(2)	997 375 049 08	hydraulic mount		2	COUPE
(2)	997 375 059 02	hydraulic mount		2	CABRIO I140
(2)	997 375 060 02	hydraulic mount		2	COUPE I140
3	900 378 159 01	hexagon-head bolt M 8 X 60		6	
4	996 375 221 02	adapter		2	
5	9A1 375 425 01	sleeve M 12 X 1,5		2	
6	9A1 375 235 02	intermediate flange		1	
7	9A1 375 245 01	spacer sleeve		1	
8	900 378 283 01	torx screw M 10 x 130		1	
9	900 378 261 01	hexagon-head bolt M 10 x 65		1	
10	900 380 021 01	hexagon nut M 12 x 1,5		2	
11		support front muffler see group 2/02/00			

Model	Year	MG	SG	Illustration	Restrictions	UPD	20:05	06.02.2010
997T2	2010	2	01	201-00		248	USA / CANADA	

PORSCHE PET PORSCHE

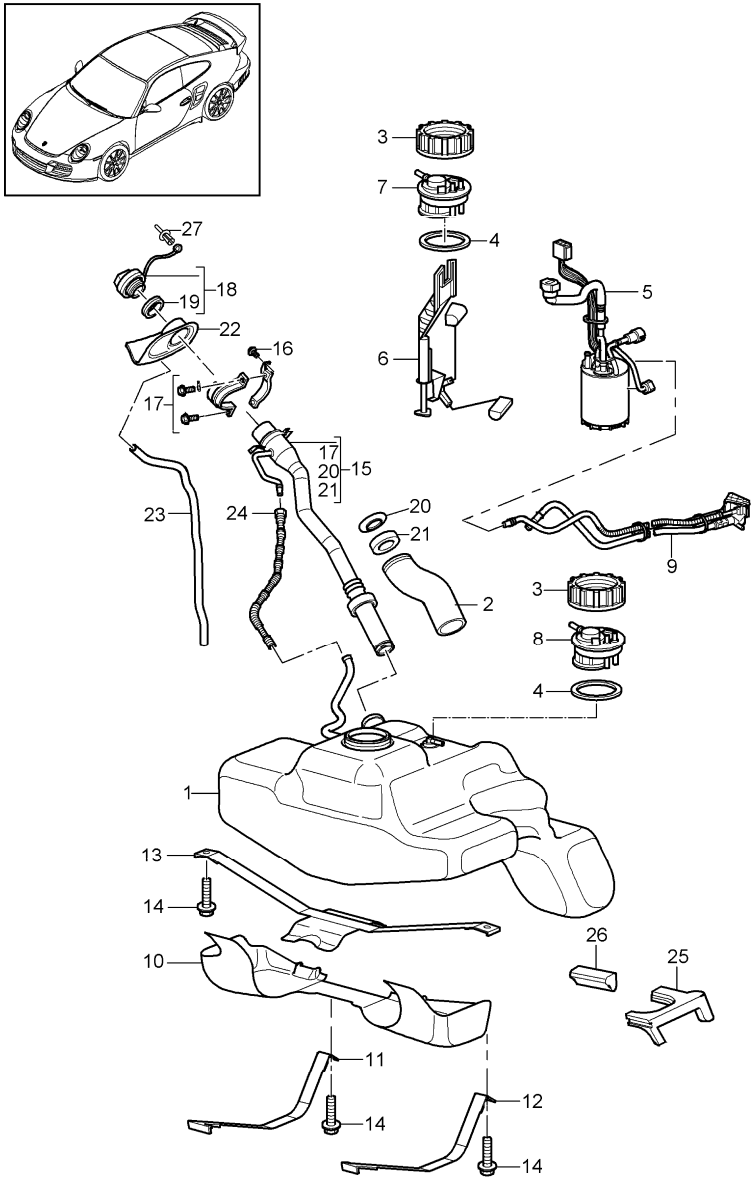

Pos	Part Number	Description	Remark	Qty	Model
		fuel tank			
1	997 201 021 04	fuel tank		1	I664
2	997 201 543 01	pipe inner		1	I664
(3)	997 201 623 00	union nut		1	
(4)	997 201 733 00	sealing ring		1	
5	997 620 148 00	fuel pump		1	
6	997 620 833 00	tank gauge without flange		1	
7	997 201 421 02	flange for tank gauge		1	I664
9	997 620 117 00	venturi tube		1	
10	997 201 331 00	protective plate		1	
11	997 201 106 00	restraining strap right		1	
12	997 201 105 00	restraining strap left		1	
13	997 201 107 00	restraining strap		1	
14	900 075 479 01	combination screw M 8 X 40		4	
15	997 201 043 11	filler neck		1	I664
16	999 073 348 09	oval-head screw M 6 X 20		1	
17	997 201 951 02	support		1	
18	996 201 241 03	fuel tank cap with clip		1	
19	191 201 557	gasket		1	
20	996 201 755 00	support washer		1	
21	996 201 753 00	gasket		1	
22	997 201 667 00	sleeve		1	
23	996 201 153 00	hose		1	

Pos	Part Number	Description	Remark	Qty	Model
(24)	997 201 721 00	vent line in-tank fuel pump to inner pipe		1	
25	997 201 811 00	foam part		1	I664
26	997 201 813 00	foam part		1	
27	999 507 499 40	expansion rivet 5,0 X 11,5		1	

Model	Year	MG	SG	Illustration	Restrictions	UPD	20:05	06.02.2010
997T2	2010	2	01	201-05		248	USA / CANADA	

PORSCHE PET PORSCHE

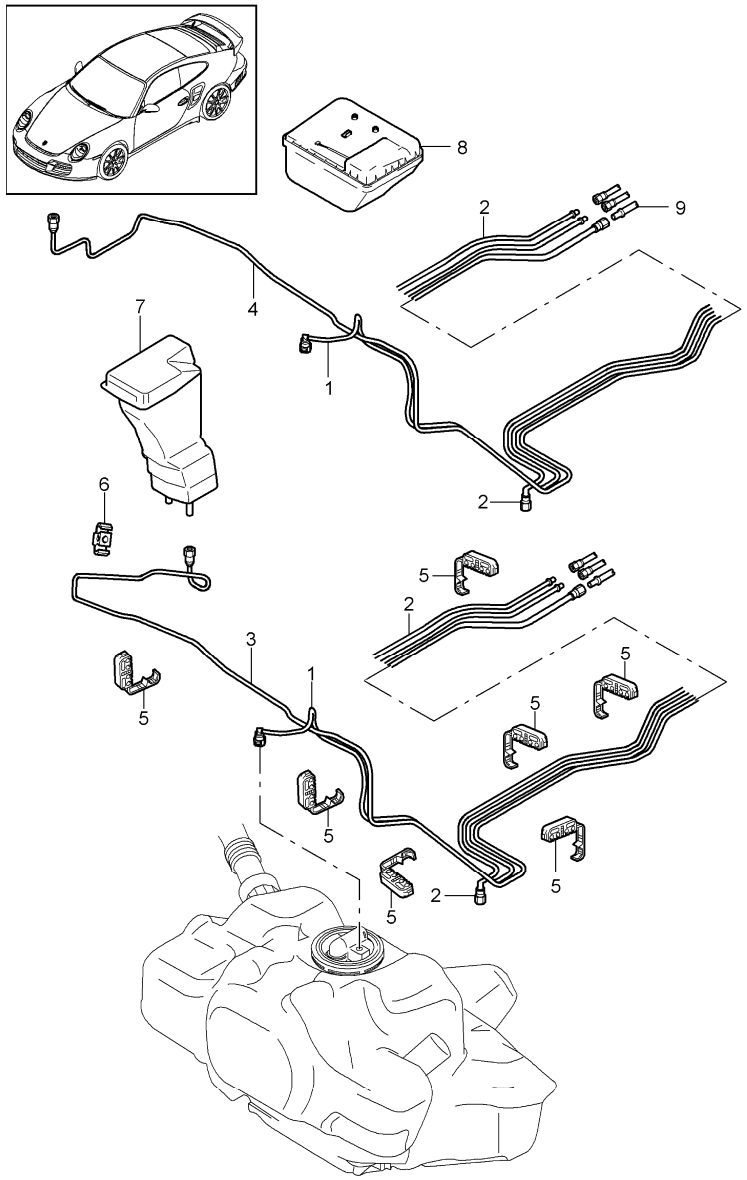

Pos	Part Number	Description	Remark	Qty	Model
		fuel system front			
(1)	997 201 261 01	fuel line front fuel pump for engine		1	I664
4	997 201 351 01	purge-air line front carbon canister for engine		1	I664
5	999 507 521 40	cable holder 8,0/8/10		8	
8		carbon canister see illustrations 2/01/30		1	
9		lines rear see illustrations 2/01/10		1	

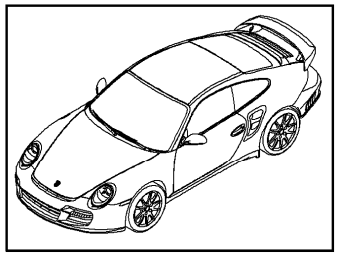

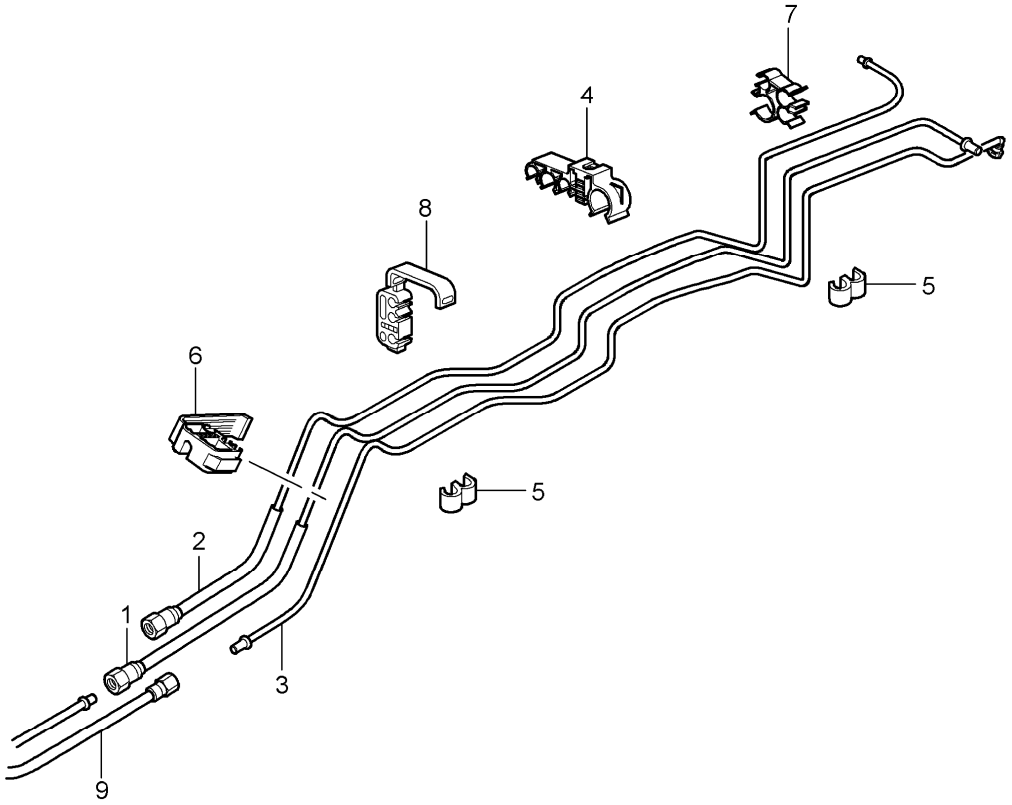

Pos	Part Number	Description	Remark	Qty	Model
		fuel system rear			
1	997 201 265 02	fuel line rear fuel pump for engine		1	
3	997 201 355 02	purge-air line rear carbon canister for engine		1	
4	999 507 833 40	cable holder 15/8/10/8		1	
5	999 507 488 40	cable holder 5,0/10,0		4	
6	999 507 521 40	cable holder 8/8/10		1	
7	999 507 850 40	cable holder 8,0/15,0		1	
8	999 507 727 40	cable holder 8/10		1	
9		lines front see illustrations 201-05			

Model	Year	MG	SG	Illustration	Restrictions	UPD	20:06	06.02.2010
997T2	2010	2	02	202-00		248	USA / CANADA	

PORSCHE PET PORSCHE

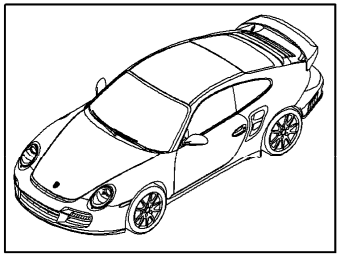

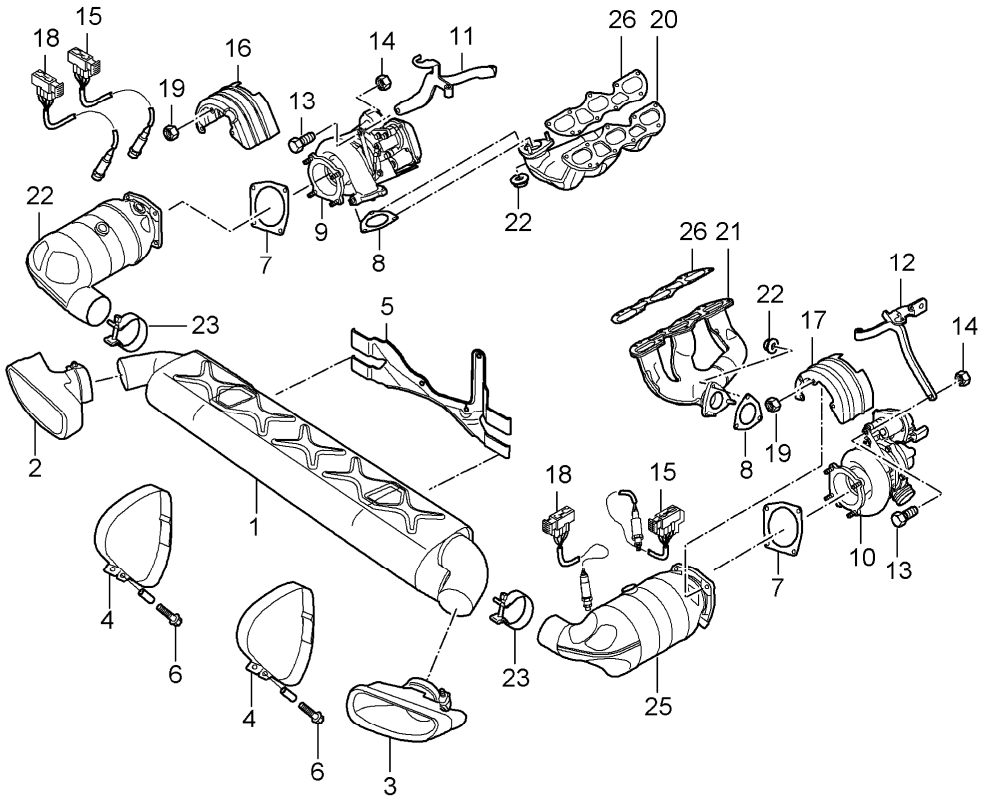

Pos		Part Number	Description	Remark	Qty	Model
			exhaust system with heat protection			
1		997 111 027 30	main exhaust muffler		1	
2		997 111 251 32	tail pipe chrome	/L	1	
3		997 111 252 32	tail pipe chrome	/R	1	
4		997 113 119 31	restraining strap		2	
5		997 113 027 31	support muffler		1	
6		900 067 362 01	pan-head screw M 8 x 50		2	
7		997 111 217 70	gasket turbocharger muffler		2	
8		997 111 215 70	gasket exhaust manifold turbocharger		2	
9	>	9A1 123 013 74	turbocharger cyl. 1 - 3	/L	1	
10	>	9A1 123 014 73	turbocharger cyl. 4 - 6	/R	1	
11		9A1 111 213 70	bracket turbocharger cyl. 1 - 3	/L	1	
12		9A1 111 214 70	bracket turbocharger cyl. 4 - 6	/R	1	
13		900 378 074 09	hexagon-head bolt M 8 x 16		2	
14		999 084 052 02	lock nut M 8		2	
15		9A1 606 128 00	oxygen sensor in front of catalytic converter		2	
16		9A1 123 215 71	heat shield cyl. 1 - 3	/L	1	
17		9A1 123 216 71	heat shield cyl. 4 - 6	/R	1	

Pos	Part Number	Description	Remark	Qty	Model
18	9A1 606 138 01	oxygen sensor after catalytic converter		1	
19	999 084 642 02	hexagon nut M 8		8	
20	997 111 171 32	exhaust manifold cyl. 1 - 3		1	
21	997 111 172 32	exhaust manifold cyl. 4 - 6		1	
22	999 084 052 02	lock nut M 8		6	
23	997 111 230 80	clamp		2	
25	997 113 010 30	catalytic converter cyl. 4 - 6		1	
(25)	997 113 009 30	catalytic converter cyl. 1 - 3		1	
26	997 111 107 30	gasket		2	
--	9A1 123 211 70	cover turbocharger cyl. 1 - 3		1	
--	999 073 501 02	torx screw M 8 x 27		18	
--	000 043 207 07	grease for oxygen sensor		1	
--	999 702 246 40	grommet 12,0 x 17,0 x 3,0		2	

Pos	Part Number	Description	Remark	Qty	Model

Model	Year	MG	SG	Illustration	Restrictions	UPD	20:08	06.02.2010
997T2	2010	2	02	202-05		248	USA / CANADA	

Pos	Part Number	Description	Remark	Qty	Model
		turbocharger with heat protection and oil pipe water line			
1	> 9A1 123 013 74	turbocharger cyl. 1 - 3		1	
1	9A1 123 013 X	turbocharger cyl. 1 - 3		1	
2	> 9A1 123 014 73	turbocharger cyl. 4 - 6		1	
2	9A1 123 014 X	turbocharger cyl. 4 - 6		1	
3	997 111 213 76	bracket cyl. 1 - 3		1	
4	997 111 214 77	bracket cyl. 4 - 6		1	
5	900 378 074 09	hexagon-head bolt M 8 x 18		2	
6	999 084 052 02	lock nut M 8		2	
7	900 336 005 00	washer 8.4		2	
8	9A1 123 215 71	heat shield cyl. 1 - 3		1	
(8)	9A1 123 216 71	heat shield cyl. 4 - 6		1	
9	900 031 032 02	washer		8	
10	999 084 052 02	lock nut		8	
11	9A1 106 073 70	water line supply cyl. 1 - 3		1	
12	9A1 106 074 70	water line supply cyl. 4 - 6		1	
13	9A1 106 075 70	water line return line cyl. 1 - 3		1	
14	9A1 106 076 70	water line return line cyl. 4 - 6		1	

Model	Year	MG	SG	Illustration	Restrictions	UPD	20:08	06.02.2010
997T2	2010	2	02	202-05		248	USA / CANADA	

Pos	Part Number	Description	Remark	Qty	Model
15	999 707 597 40	o-ring 12,0 X 2,5		8	
16	999 073 236 0A	oval-head screw M 6 X 10		4	
17	997 107 329 70	intake pipe cyl. 1 - 3		1	
18	997 107 328 70	intake pipe cyl. 4 - 6		1	
19	999 701 789 40	o-ring 12,0 X 2,0		8	
20	997 107 219 76	pressure line cyl. 1 - 3		1	
21	997 107 220 75	pressure line cyl. 4 - 6		1	
22	999 707 614 40	o-ring 9,25 X 1,78		6	
23	997 107 239 76	vent line cyl. 1 - 3		1	
24	997 107 240 74	vent line cyl. 4 - 6		1	
25	900 385 041 01	torx screw M 6 X 12		5	
26	999 512 686 09	hose clamp		4	
27	997 107 327 72	oil collection container cyl. 1 - 3		1	
28	997 107 326 72	oil collection container cyl. 4 - 6		1	
29	999 707 387 40	o-ring 15,00 X 2,5		2	
30	900 385 019 01	torx screw M 6 X 20		4	
31	999 702 246 40	grommet		2	
32	9A1 106 649 72	t-piece water line supply turbocharger		1	
33	900 081 059 00	stud M 8 X 22		14	
34	9A1 606 250 04	sensor exhaust gas		1	

Model	Year	MG	SG	Illustration	Restrictions	UPD	20:08	06.02.2010
997T2	2010	2	02	202-05		248	USA / CANADA	

Pos	Part Number	Description	Remark	Qty	Model
35	9A1 620 251 00	water pump turbocharger		1	
--	9A1 106 201 70	support ring water pump turbocharger		1	
--	997 106 211 72	support water pump turbocharger		1	
--	900 385 009 01	torx screw M 6 X 16		1	
36	997 107 216 70	return line		1	
37	999 701 789 40	o-ring 12 X 2		2	
38	900 175 022 09	banjo bolt M 16 X 1,5 X 36		1	
39	900 123 152 30	sealing ring A16 X 22		2	
40	900 385 009 01	torx screw M 6 X 16		1	
41	999 512 658 09	hose clamp B 27 X 12		1	
42	999 512 652 09	hose clamp B 19 X 12		1	
43	999 512 655 09	hose clamp B 22 X 12		1	
44	999 651 122 01	cable clamp 7 - 1		2	
45	9A1 605 315 02	adjusting motor cyl. 1 - 3		1	
(45)	9A1 605 316 01	adjusting motor cyl. 4 - 6		1	
46	997 123 124 70	operating rod cyl. 1 - 3 cyl. 4 - 6		2	
47	000 043 207 53	pan-head screw M 6 X 25,6 -8.8		3	

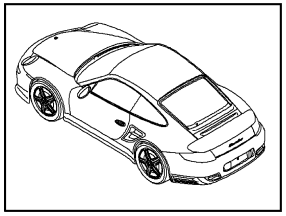

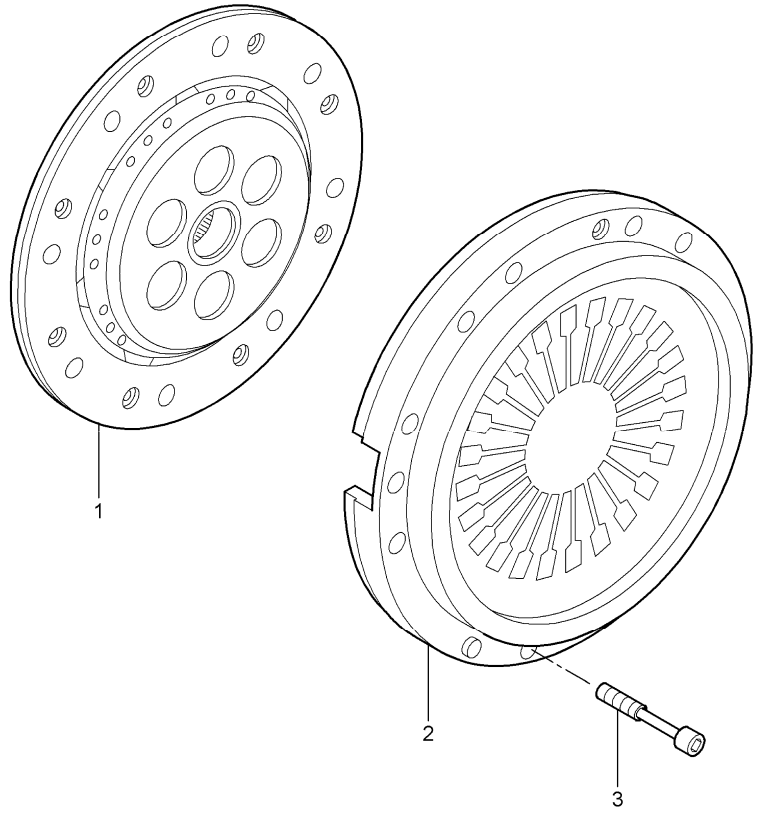

Pos	Part Number	Description	Remark	Qty	Model
		clutch			
1	997 116 013 51	clutch plate		1	
2	997 116 027 50	pressure plate		1	
3	999 510 015 01	pan-head screw M 8 X 40		9	

Model	Year	MG	SG	Illustration	Restrictions	UPD	20:08	06.02.2010
997T2	2010	3	01	301-05		248	USA / CANADA	

PORSCHE PET PORSCHE

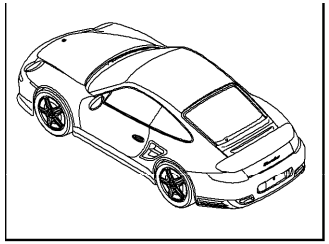

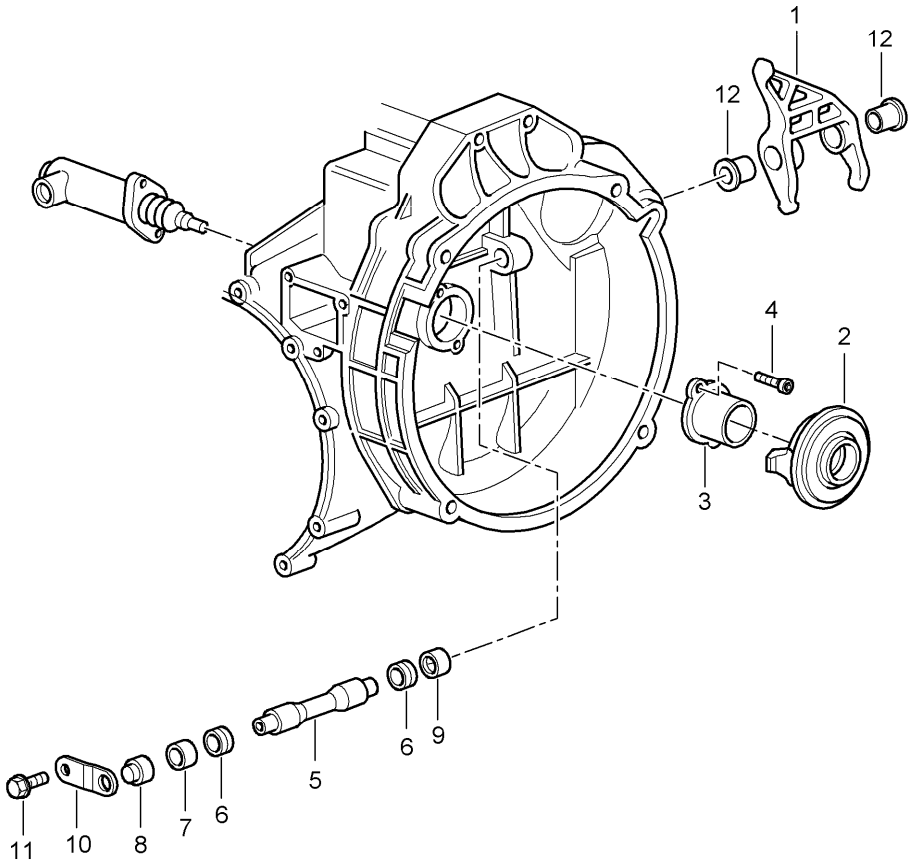

Pos	Part Number	Description	Remark	Qty	Model
		clutch release clutch operating cylinder see group 7/02/08			G97.55
1	950 116 086 06	release fork with bush		1	
2	950 116 080 08	clutch release bearing		1	
3	950 116 813 06	guide tube		1	
4	999 270 070 01	oval-head screw M 6 X 14		2	
5	950 116 710 04	clutch control shaft		1	
6	999 113 418 40	gasket 12,3 X 16,4		2	
7	999 201 339 00	articulated bush		1	
8	950 116 725 00	cover		1	
9	999 201 365 00	articulated bush		1	
10	950 116 713 02	retaining bracket		1	
11	900 075 057 03	hexagon-head bolt M 6 X 16		1	
12	950 116 715 01	bush		2	

Model	Year	MG	SG	Illustration	Restrictions	UPD	20:09	06.02.2010
997T2	2010	3	02	302-00		248	USA / CANADA	

PORSCHE PET PORSCHE

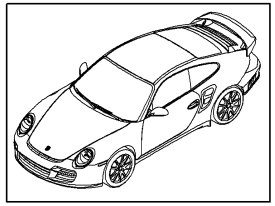

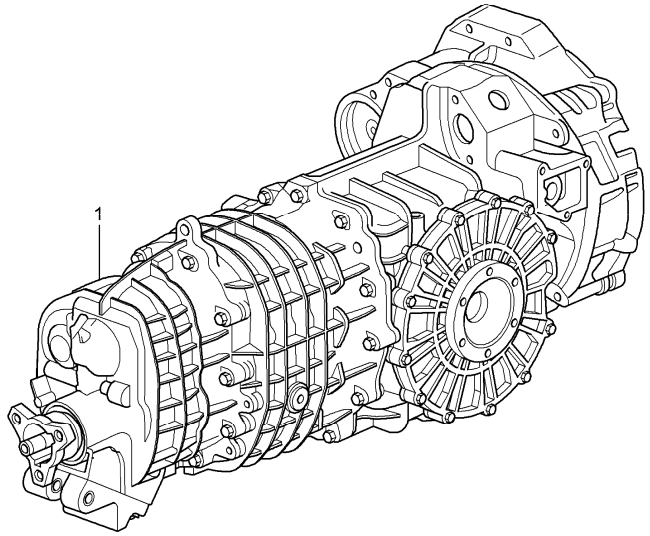

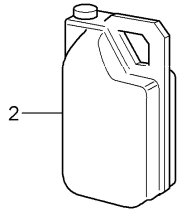

Pos		Part Number	Description	Remark	Qty	Model
			replacement transmission			G97.55
1	>	997 300 010 56	manual transmission without limited-slip differential		1	G97.55 I219
1		997 300 010 2X	manual transmission without limited-slip differential		1	G97.55 I219
1	>	997 300 020 56	manual transmission with limited-slip differential		1	G97.55 I220
1		997 300 020 2X	manual transmission with limited-slip differential		1	G97.55 I220
3		000 043 204 20	transmission oil MOBILUBE PTX 75 W 90 container 20 LTR.		X	

Model	Year	MG	SG	Illustration	Restrictions	UPD	20:09	06.02.2010
997T2	2010	3	02	302-01		248	USA / CANADA	

PORSCHE PET PORSCHE

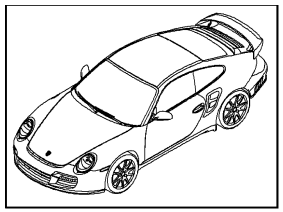

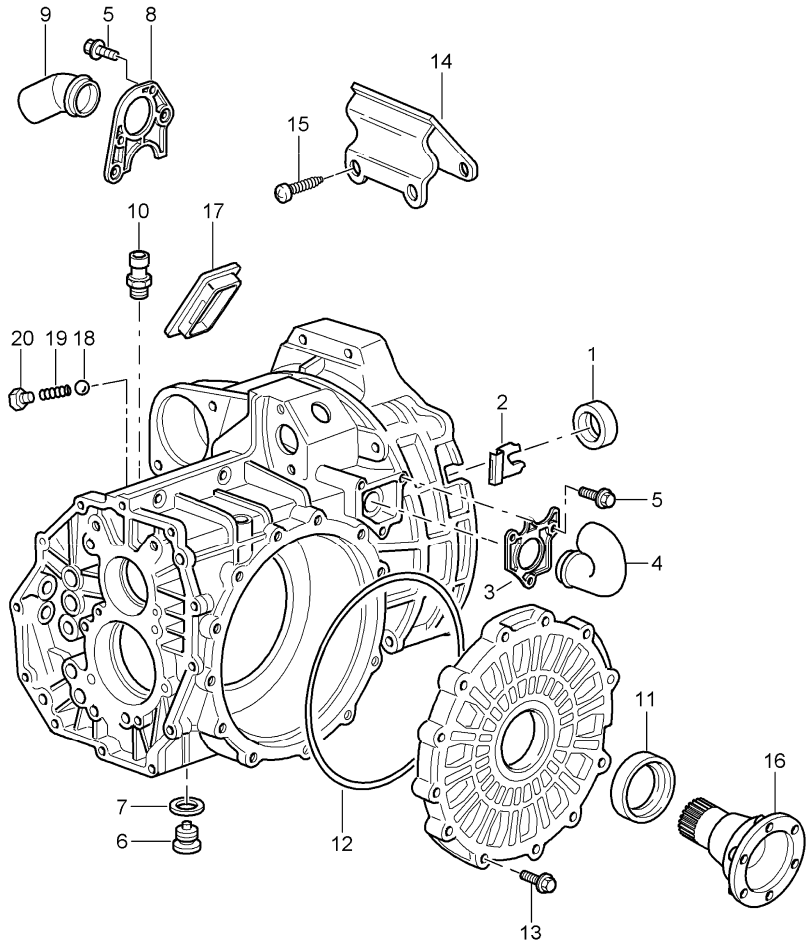

Pos	Part Number	Description	Remark	Qty	Model
		transmission case			G97.55
1	999 113 326 41	shaft sealing ring 26,5 X 40		1	
2	993 116 630 00	cap		1	
3	996 116 612 00	flange		1	
4	993 116 610 00	intake manifold		1	
5	900 378 035 09	hexagon-head bolt M 6 X 16		5	
6	999 063 008 02	screw plug with magnet M 22 X 1,5		1	
7	900 123 118 30	sealing ring		1	
8	996 116 710 00	flange socket		1	
9	993 116 610 00	intake manifold		1	
10	996 301 071 00	bleeder 17 X 12 X 28,1		1	
11	999 113 356 40	shaft sealing ring 48 X 68 X 10		2	
12	999 701 008 40	o-ring 215 X 3,5		1	
13	999 141 048 01	hexagon socket head bolt M 8 X 40		12	
14	997 449 101 50	hook		1	
15	999 073 190 09	oval-head screw M 8 X 60		2 2	
16	997 332 209 51	joint flange		2	
17	950 301 151 01	cap		1	
18	900 108 064 00	ball 8		4	
19	996 303 245 00	compression spring		4	
20	900 124 027 01	screw plug CM 10 X 1		4	
--	996 606 133 00	switch back-up light		1	

Model	Year	MG	SG	Illustration	Restrictions	UPD	20:09	06.02.2010
997T2	2010	3	05	305-10		248	USA / CANADA	

PORSCHE PET PORSCHE

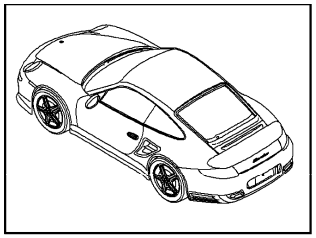

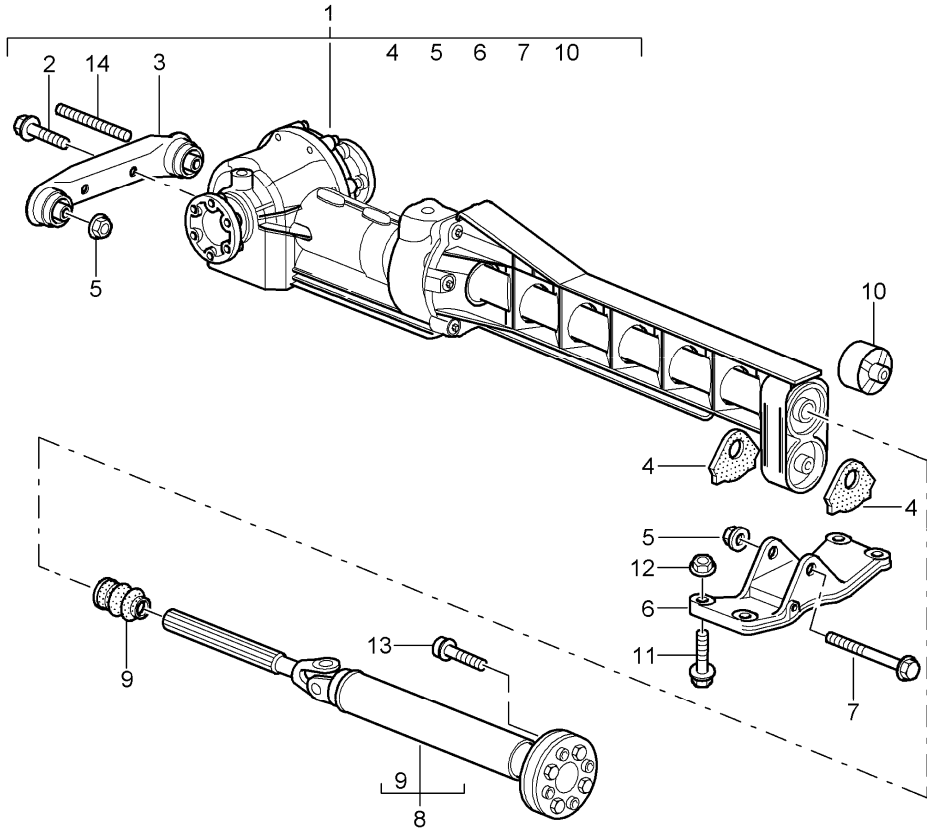

Pos	Part Number	Description	Remark	Qty	Model
		front-axle final drive cardan shaft			
1	997 349 020 53	front-axle final drive ready for installation		1	
2	999 072 034 01	conical screw M 10 X 28		2	
3	997 375 934 00	transmission carrier front		1	
4	997 375 257 00	stop		2	
5	900 380 008 01	hexagon nut M 10		1	
6	997 375 343 00	transmission carrier rear		1	
7	900 378 142 01	hexagon-head bolt M 10 X 90		1	
8	997 421 020 01	cardan shaft		1	
9	996 421 145 01	boot		1	
10	996 375 054 03	transmission mounting rear		1	
11	900 385 123 01	combination screw M 10 X 25		4	
12	999 076 053 09	hexagon nut M 10		4	
13	900 385 097 01	torx screw M 10 X 35		3	
14	999 061 111 99	stud M 10 X 121		2	

Model	Year	MG	SG	Illustration	Restrictions	UPD	20:10	06.02.2010
997T2	2010	3	05	305-15		248	USA / CANADA	

PORSCHE PET PORSCHE

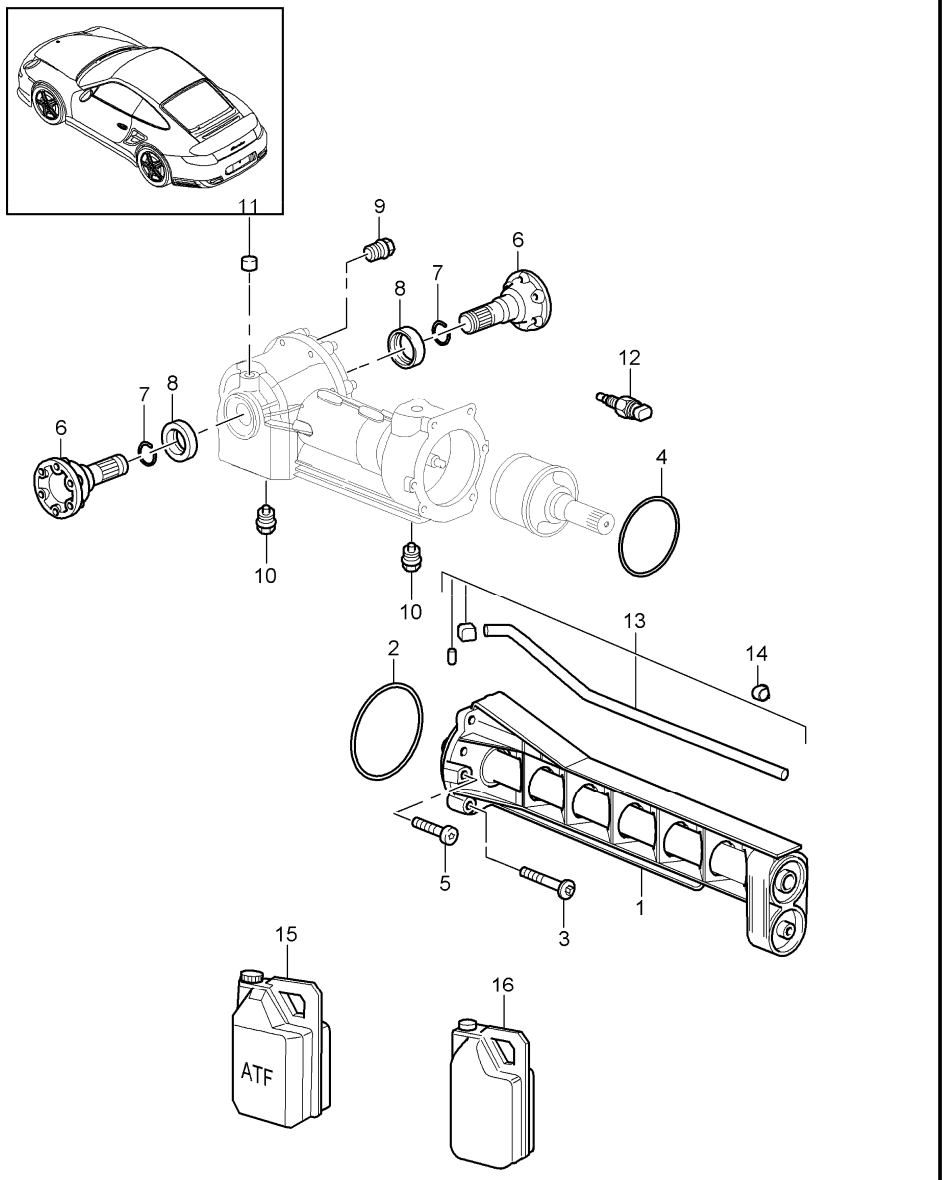

Pos	Part Number	Description	Remark	Qty	Model
		front-axle final drive			
		clutch single parts			
1	997 337 041 50	bracket		1	
2	999 707 455 40	o-ring 123 X 3		1	
3	900 385 141 01	torx screw M 8 X 40		5	
5	900 067 018 04	pan-head screw M 8 X 25		1	
6	997 332 309 00	joint flange		2	
7	996 332 311 00	circlip 20 X 2,5		2	
8	999 113 454 40	shaft sealing ring 40 X 60 X 9		2	
9	900 124 013 01	screw plug M 18 X 1,5 oil filler screw		2	
10	900 124 014 01	screw plug M 18 X 1,5 drain plug		2	
11	997 337 710 00	cap bleeder 17 X 13,5		1	
12	997 606 303 00	temperature sensor		1	
13	997 337 071 00	breather hose		1	
14	999 507 339 01	cable terminal		4	
15	000 043 303 00	transmission oil for clutch 1 LTR. container		1	
16		transmission oil front-axle final drive see illustrations 3/02/00			

Model	Year	MG	SG	Illustration	Restrictions	UPD	20:11	06.02.2010
997T2	2010	3	06	306-00		248	USA / CANADA	

PORSCHE PET PORSCHE

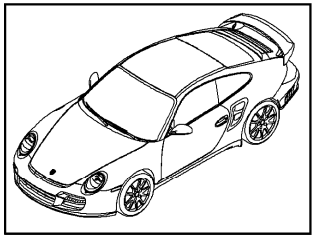

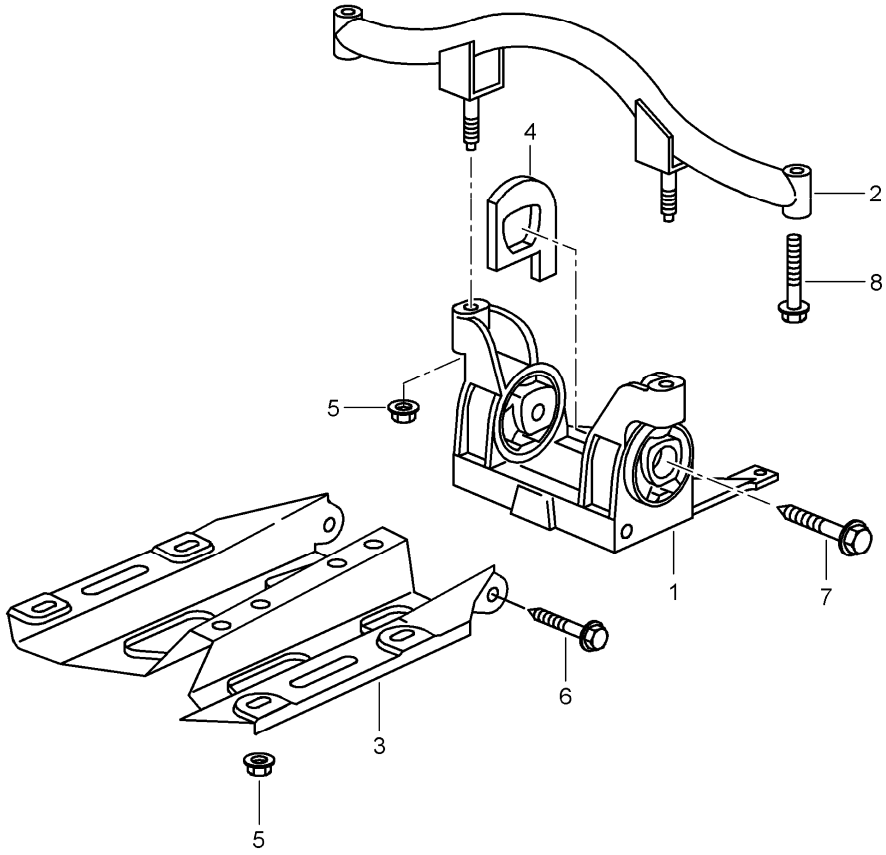

Pos	Part Number	Description	Remark	Qty	Model
		transmission suspension			G97.55
1	996 375 033 03	transmission carrier		1	
2	996 375 317 06	bracket upper		1	
3	996 375 015 00	side member		1	
4	996 375 259 08	stop		2	
5	900 378 167 09	hexagon-head bolt M 10 X 110		2	
5	999 061 106 09	stud M 10 X 83		2	
6	900 380 008 09	hexagon nut M 10		2	
(6)	999 076 053 09	hexagon nut M 10		6	
7	999 072 010 09	hexagon-head bolt M 12 X 1,5 X 100		2	
8	999 072 008 09	hexagon-head bolt M 12 X 1,5 X 70		3	
9	900 378 061 09	hexagon-head bolt M 12 X 1,5 X 50		1	
10	900 378 076 09	hexagon-head bolt M 10 X 50		1	
11	900 377 011 09	hexagon nut M 10		1	

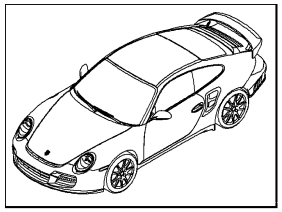

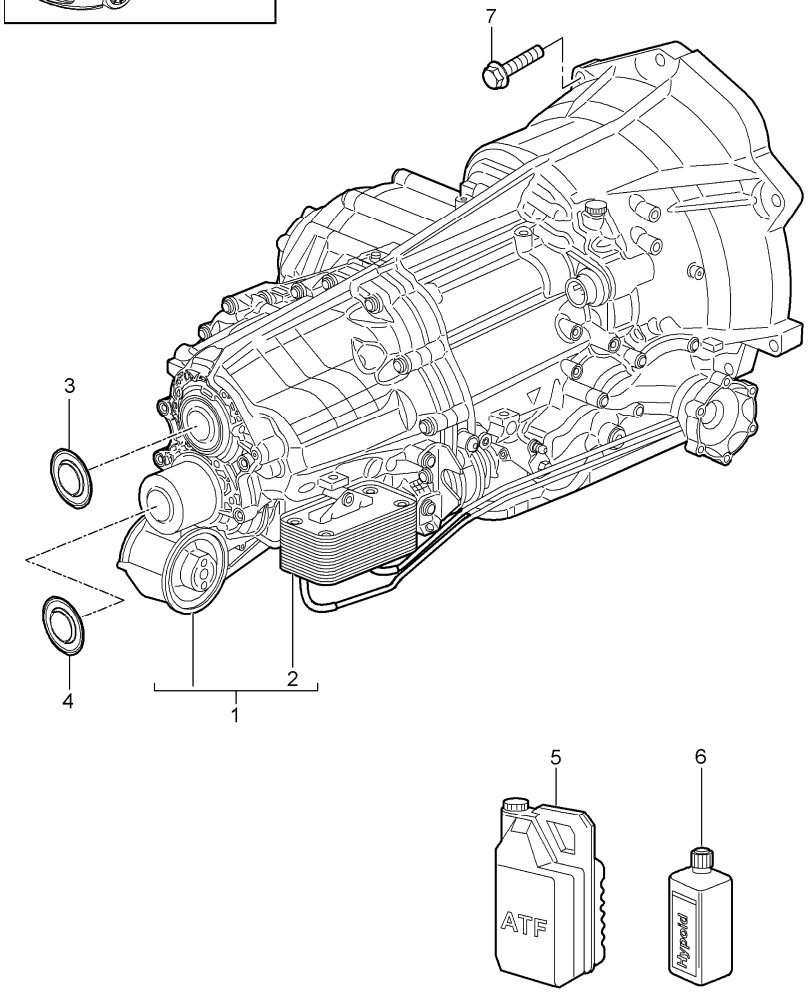

Pos		Part Number	Description	Remark	Qty	Model
			- pdk - transmission replacement transmission			
1	>	9G1 300 011 50	transmission		1	I219
1		9G1 300 011 CX	transmission		1	I219
1	>	9G1 300 021 50	transmission		1	I220
1		9G1 300 021 CX	transmission		1	I220
2			heat exchanger see group 3/60/00		1	
3		9G1 321 360 00	lid transmission case rear		2	
4		9G1 321 360 00	lid transmission case rear		1	
5		000 043 207 30	transmission oil Pentosin FFL 3 20 LTR. container		X	
(5)		000 043 207 29	transmission oil Pentosin FFL 3 1 LTR. container		X	
6		999 917 546 00	transmission oil 75 W 90 differential 1 LTR. container		X	
7		999 385 009 01	Outer hexagon round screw M12 X 1,5 X 55 threaded joint engine and transmission		6	

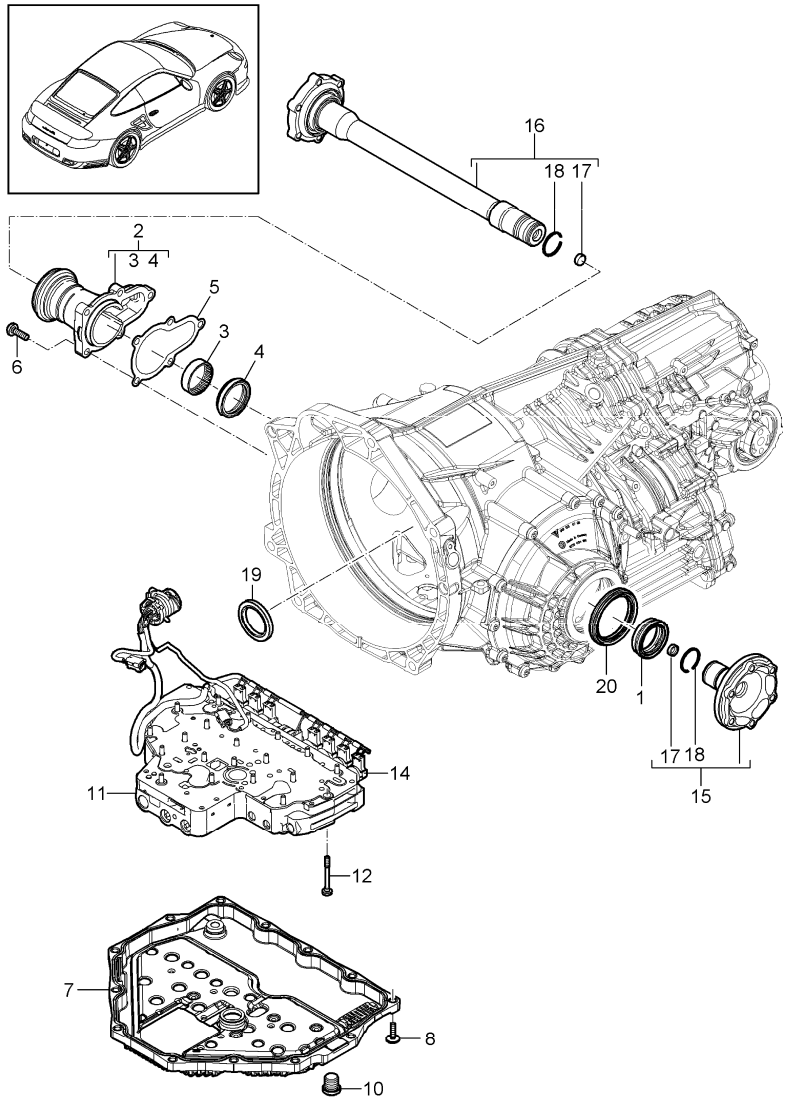

Pos	Part Number	Description	Remark	Qty	Model
		- pdk - transmission single parts			
1	U 9G1 332 806 00	shaft sealing ring 40X52 / 55X40		1	
2	9G1 321 959 00	Housing neck complete		1	
5	9G1 321 259 00	gasket flange		1	
6	9G1 332 801 00	torx screw M8 X 25		5	
7	9G1 321 025 00	oil pan complete		1	
8	9G1 321 801 00	torx screw M6 X 25		13	
9	9G1 321 805 00	screw plug included sealing ring		1	
10	9G1 321 825 00	screw plug included sealing ring		1	
11	9G1 317 015 00	control unit hydraulic pdk		1	
12	9G1 317 801 00	Flachkopfschraube M6x55		20	
13	9G1 317 697 00	connector housing pressure regulator		2	
14	9G1 317 698 00	connector housing solenoid valve		6	
(15)	9G1 332 028 50	joint flange short		1	
(16)	9G1 332 029 50	joint flange long		1	
17	9G1 332 821 00	lid		2	
18	9G1 332 820 00	circlip D36 x 2,6		2	
19	9G1 116 807 00	shaft sealing ring 40 x 57 x 6		1	

Pos	Part Number	Description	Remark	Qty	Model	Pos	Part Number	Description	Remark	Qty	Model
20	N 9G1 332 803 00	shaft sealing ring 64X82X8		1							

Model	Year	MG	SG	Illustration	Restrictions	UPD	20:11	06.02.2010
997T2	2010	3	60	360-00		248	USA / CANADA	

PORSCHE PET PORSCHE

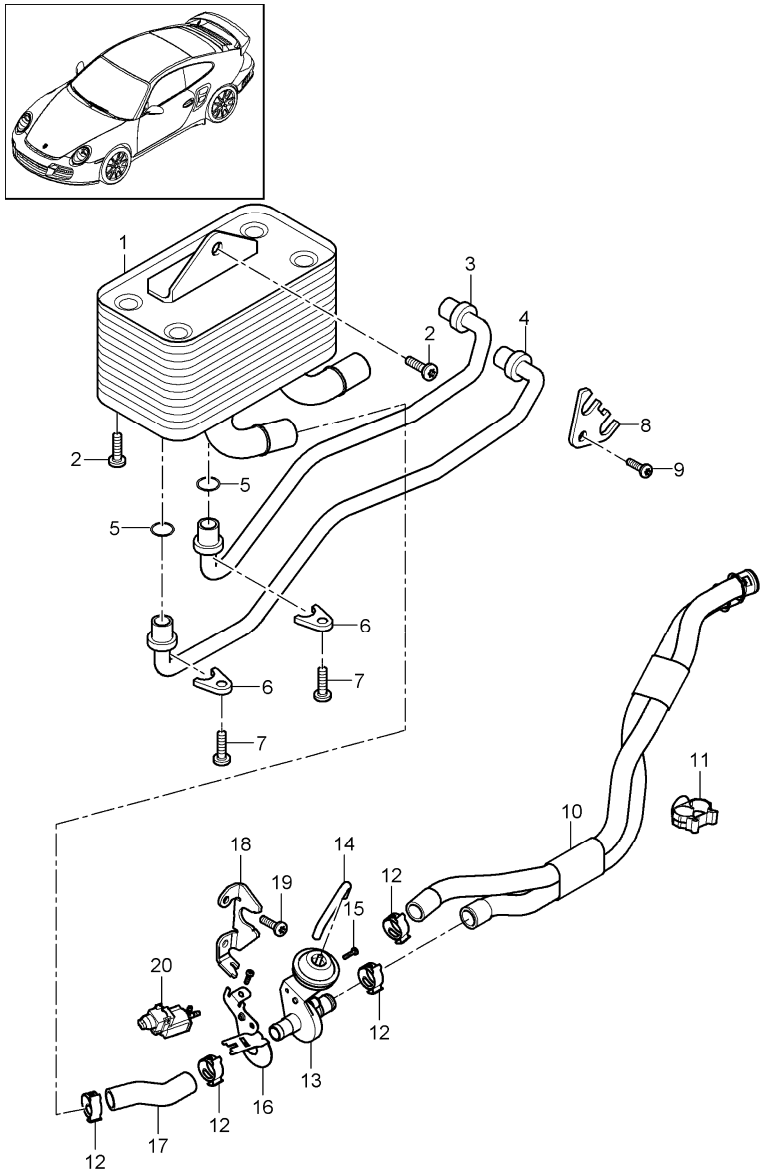

Pos	Part Number	Description	Remark	Qty	Model
		- pdk - transmission heat exchanger oil tube water tube			
1	9G1 307 017 00	heat exchanger		1	
2	9G1 307 813 00	torx screw M6 X 12		3	
3	9G1 307 087 00	oil pipe heat exchanger supply		2	
4	9G1 307 085 00	oil pipe heat exchanger return line		1	
5	9G1 307 891 00	sealing ring oil pipe heat exchanger		4	
6	9G1 307 245 00	retaining bracket oil pipe heat exchanger		2	
7	9G1 307 813 00	torx screw M6 X 12		2	
8	9G1 307 255 00	retaining bracket oil pipe transmission		1	
9	9G1 307 802 00	torx screw M8 X 15		1	
10	9G1 307 711 01	hose line		1	
11	999 507 855 40	cable holder 22,0 / 22,0		1	
12	999 512 656 09	hose clamp B25 X 12		4	
13	928 574 573 03	disc valve		1	
14	9G1 307 673 00	moulded hose		1	
15	999 073 415 01	round head screw M4 X 16		2	
16	9G1 307 401 02	support disc valve		1	
17	9G1 307 713 00	water hose		1	

Pos	Part Number	Description	Remark	Qty	Model
18	9G1 426 211 00	support		1	
19	9G1 426 801 00	torx screw M8 X 20		2	
20	996 605 123 01	change-over valve		1	

Model	Year	MG	SG	Illustration	Restrictions	UPD	20:11	06.02.2010
997T2	2010	4	01	401-00		248	USA / CANADA	

PORSCHE PET PORSCHE

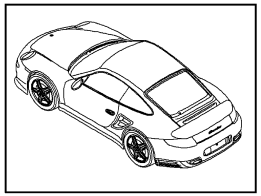

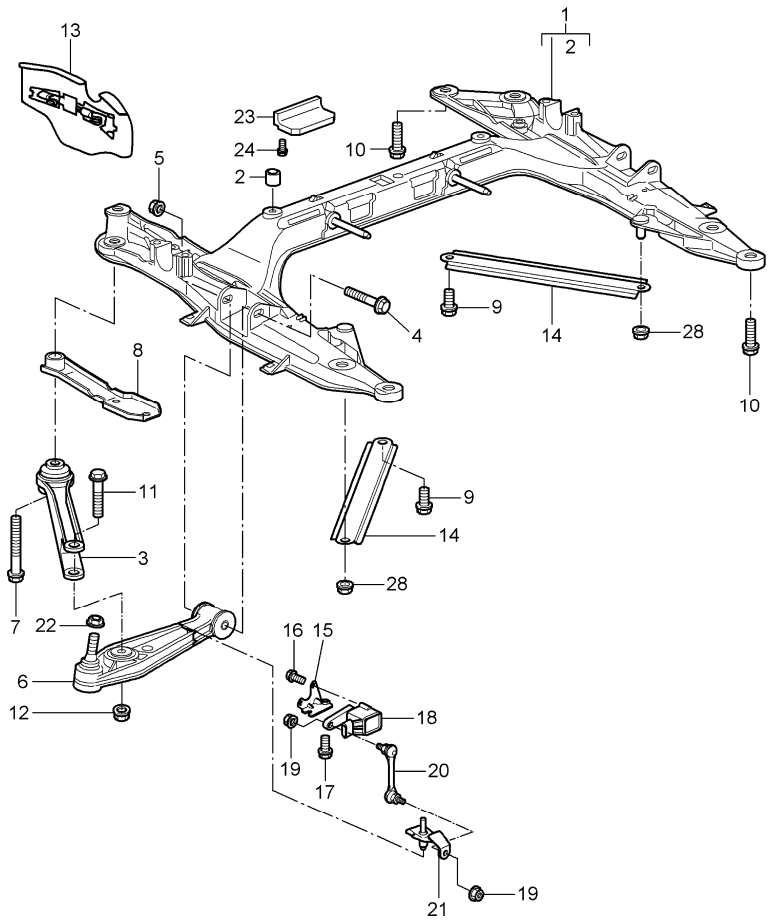

Pos	Part Number	Description	Remark	Qty	Model
		cross member wishbone cross member		1	
1	997 341 081 11	cross member		1	
2	900 197 070 00	roll pin 13 X 14		1	
3	997 341 043 00	control arm		2	
4	900 378 165 01	hexagon-head bolt M 12 X 1,5 X 95		2	
5	999 084 445 01	lock nut M 12 x 1,5		2	
6	997 341 053 04	wishbone		2	
7	999 072 050 01	hexagon-head bolt M 14 X 1,5 X 120		2	
8	997 341 145 05	plate		2	
9	999 072 047 01	hexagon-head bolt M 12 x 1,5 x 30		4	
10	900 378 192 01	hexagon-head bolt M 14 x 1,5 x 50		2	
11	900 378 279 01	hexagon-head bolt M 14 X 1,5 X 95		2 2	
12	A 900 380 012 09	hexagon nut M 14 X 1,5		2	
12	900 380 012 01	hexagon nut M 14 X 1,5		2	
13	997 341 483 01	spoiler	/L	1	
(13)	997 341 484 01	spoiler	/R	1	
14	997 504 433 01	strut		2	
15		support see illustrations 1/05/10		1	I603
16	900 146 003 03	oval-head screw M 5 x 10		2	I603
17	900 378 036 01	hexagon-head bolt M 6 x 12		1	I603
18	997 631 121 00	sensor		1	I603

Pos	Part Number	Description	Remark	Qty	Model
19	900 380 015 01	hexagon nut VM 6		2	I603
20	997 341 375 01	strut		1	I603
21	996 341 371 03	support		1	I603
22	999 084 449 09	hexagon nut M 12 X 1,5		2	I603
23	997 341 431 02	stop		1	
24	999 072 047 01	hexagon-head bolt M 12 x 1,5 x 30		4	
28	999 084 445 01	hexagon nut M 12 X 1,5		2	

Pos	Part Number	Description	Remark	Qty	Model

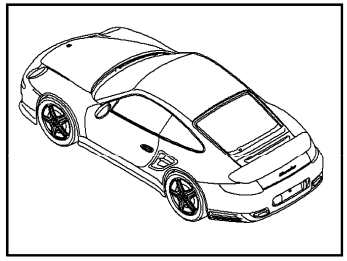

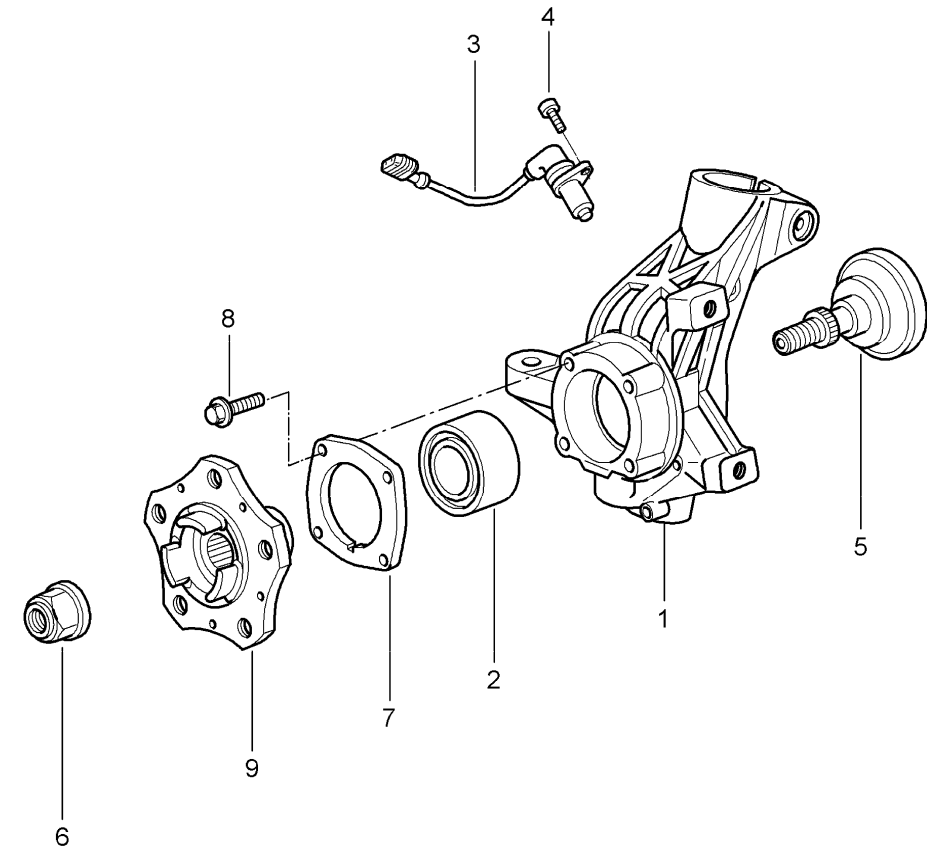

Pos	Part Number	Description	Remark	Qty	Model
		wheel carrier wheel hub			
1	997 341 165 24	wheel carrier	/L	1	
(1)	997 341 166 24	wheel carrier	/R	1	
2	999 053 054 05	angular-contact bearing		2	
3	997 606 407 01	speed sensor		2	
-	997 341 321 90	support cable speed sensor		2	
4	900 067 117 04	pan-head screw M 6 x 16		2	
6	999 084 641 02	lock nut M 22 x 1,5		2	
7	986 331 661 20	lid		2	
8	999 217 042 09	hexagon-head bolt M 8 X 35		8	
9	997 341 605 01	wheel hub		2	
(9)	997 341 607 02	wheel hub		2	I422

Model	Year	MG	SG	Illustration	Restrictions	UPD	20:12	06.02.2010
997T2	2010	4	01	401-10		248	USA / CANADA	

PORSCHE PET PORSCHE

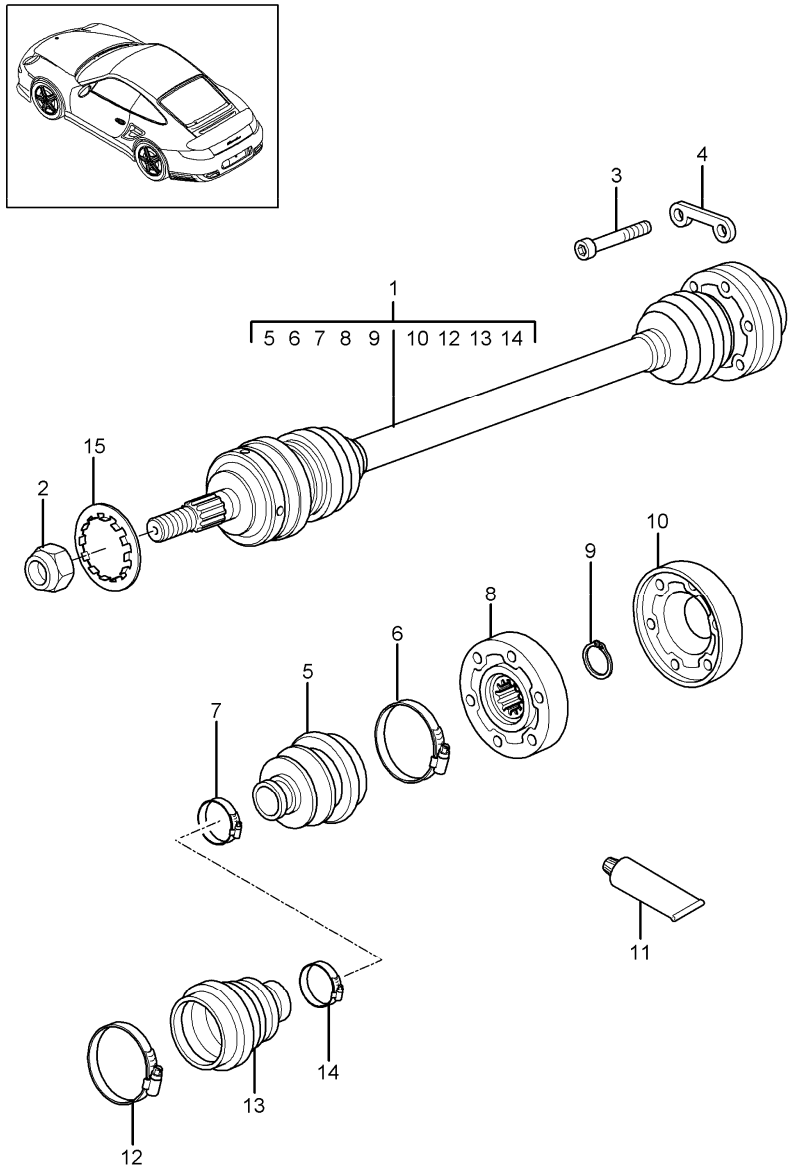

Pos	Part Number	Description	Remark	Qty	Model
		drive shaft			
1	997 349 038 01	drive shaft		2	
2	999 084 641 01	lock nut M 22 X 1,5		2	
3	900 067 073 02	pan-head screw M 8 X 45		12	
(4)	996 349 191 01	plate		6	
5	996 349 293 00	dust bellows		2	
-	997 349 955 00	bellow support with dust bellows		2	
6	997 349 957 00	clip		2	
7	996 349 257 03	clip		2	
8	996 349 030 00	joint		2	
9	900 041 011 01	circlip		2	
10	996 349 267 00	lid		2	
11	000 043 110 01	grease 1 100-gramme tube		X	
(11)	000 043 205 36	sealing compound drive shaft 1 100-gramme tube		X	
12	996 349 257 00	clip		2	
13	996 349 291 00	dust bellows		2	
14	996 349 257 01	clip		2	
15	997 349 269 00	protective ring		2	

Model	Year	MG	SG	Illustration	Restrictions	UPD	20:12	06.02.2010
997T2	2010	4	02	402-00		248	USA / CANADA	

PORSCHE PET PORSCHE

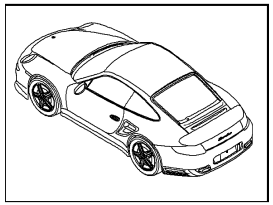

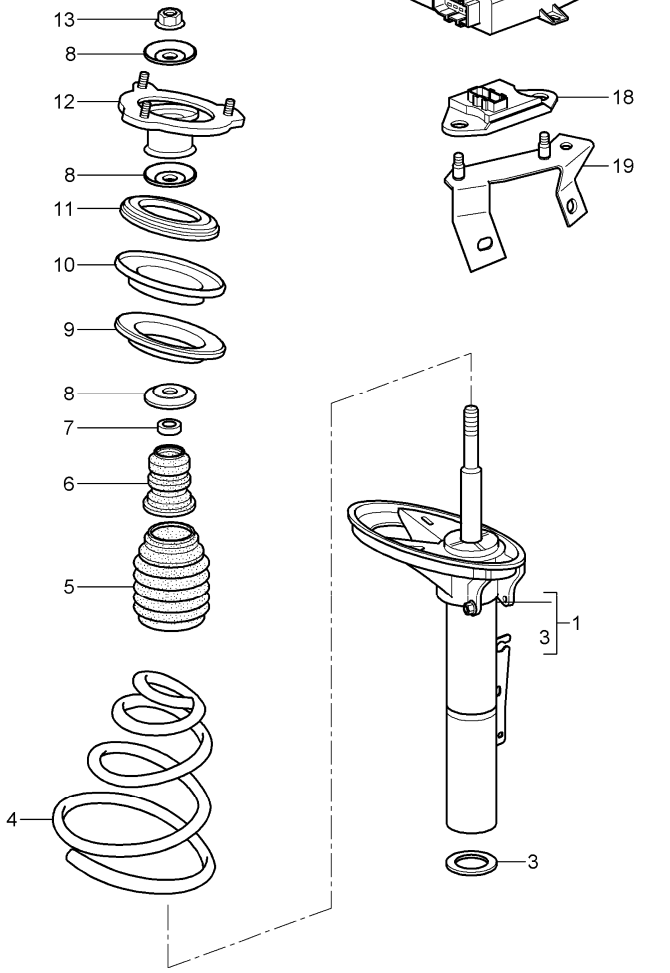

Pos	Part Number	Description	Remark	Qty	Model
		suspension shock absorber strut			
1	997 343 047 35	vibration damper	/L	1	
(1)	997 343 048 35	vibration damper	/R	1	
		mount shock absorber			
-	900 378 138 01	hexagon-head bolt M 12 X 1,5 X 70		2	
-	999 084 445 01	lock nut M 12 xs 1,5		2	
4	997 343 533 41	coil spring 1 set		1	
	504	identification white green			
5	996 343 509 01	bellows		2	
6	996 343 301 02	additional spring		2	
7	996 343 513 00	washer		2	
8	997 343 107 00	stop plate upper		2	
(8)	997 343 107 01	stop plate lower		4	
9	996 343 525 00	compensating plate 3,0 MM		X	
(9)	996 343 525 01	compensating plate 6,5 MM		X	
10	996 343 523 00	support ring		2	
11	996 343 501 00	angular-contact bearing		2	
12	997 343 015 02	supporting mount	/L	1	
(12)	997 343 016 02	supporting mount	/R	1	
-	999 084 447 01	hexagon nut M 8		12	
13	900 380 012 01	hexagon nut M 14 X 1,5		2	
15	999 703 457 40	lid		2	

Pos	Part Number	Description	Remark	Qty	Model
(17)	997 618 460 01	control unit		1	
18	997 606 111 01	acceleration sensor body		1	
19	997 606 212 01	support acceleration sensor		1	

Model	Year	MG	SG	Illustration	Restrictions	UPD	20:12	06.02.2010	PORSCHE	PET	PORSCHE
997T2	2010	4	02	402-05		248	USA / CANADA				

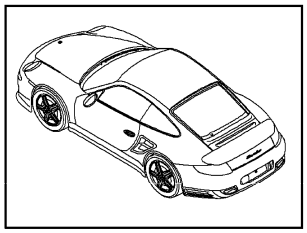

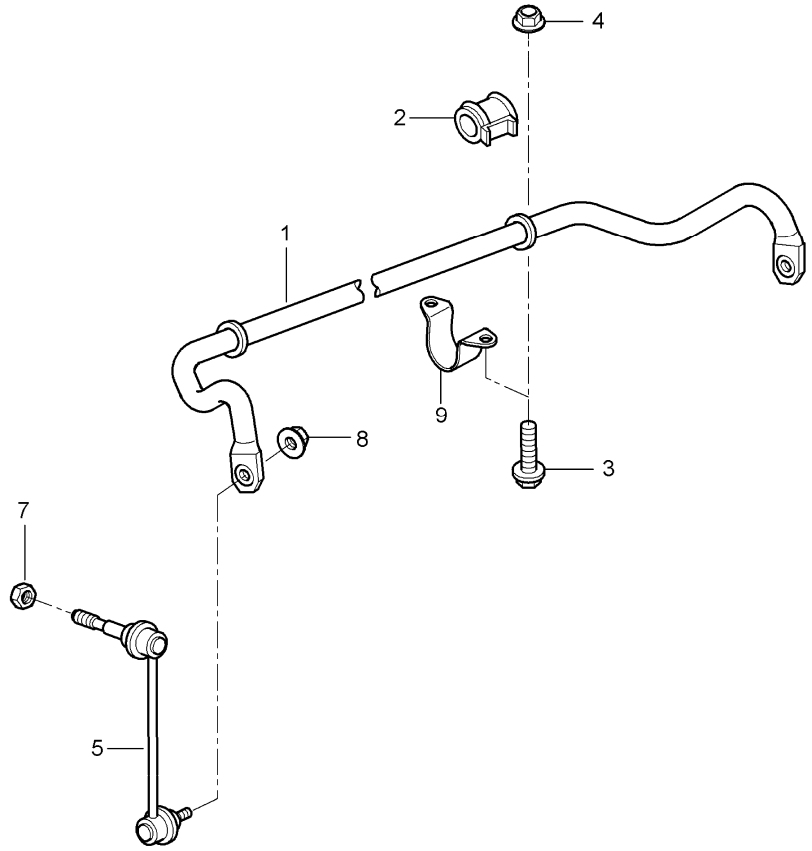

Pos	Part Number	Description	Remark	Qty	Model
		stabiliser			
(1)	997 343 703 10	stabiliser		1	COUPE CABRIO
(1)	997 343 703 07	stabiliser		1	COUPE I220 CABRIO
(2)	996 343 792 17	stabiliser mounting		2	COUPE CABRIO
(2)	997 343 792 00	stabiliser mounting		2	COUPE I220 CABRIO
3	900 378 098 01	hexagon-head bolt m 10 x 60		2	
4	900 380 008 01	hexagon nut M 10		4	
5	997 343 073 03	stabiliser mounting	/L	1	
(5)	997 343 074 03	stabiliser mounting	/R	1	
7	999 084 643 09	hexagon nut M 10		4	
8	999 084 643 09	hexagon nut M 10		4	
9	997 343 777 01	clip		2	

Model	Year	MG	SG	Illustration	Restrictions	UPD	20:12	06.02.2010
997T2	2010	4	03	403-00		248	USA / CANADA	

PORSCHE PET PORSCHE

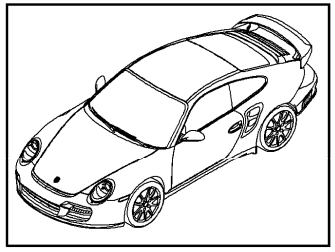

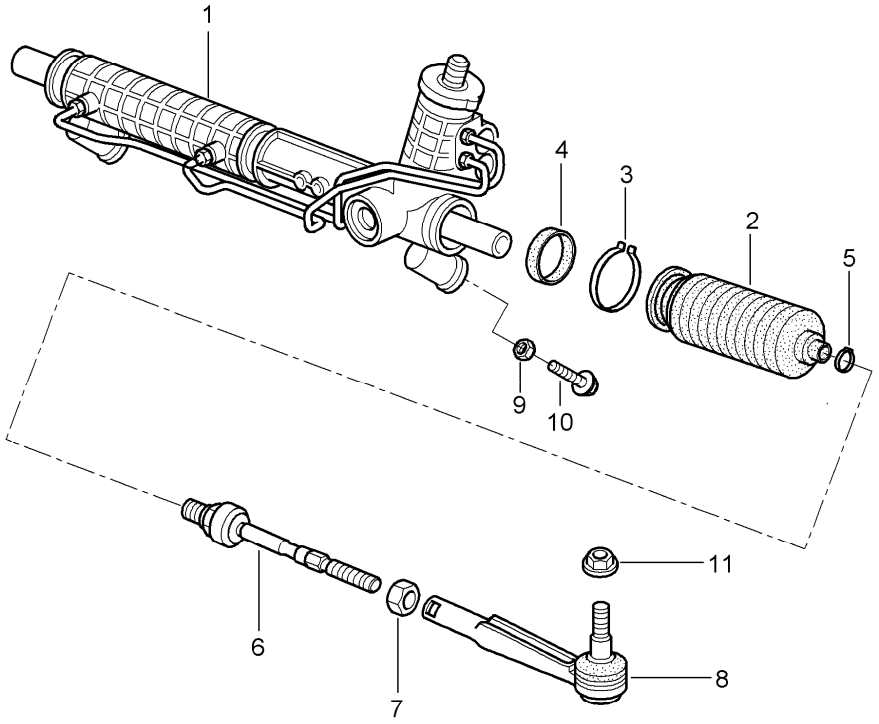

Pos	Part Number	Description	Remark	Qty	Model
		power steering steering gear steering parts			
(1)	> 997 347 011 06	steering gear power steering	/LL	1	I098
2	997 347 191 00	bellows	/LL	2	I098
3	996 347 293 05	clamping ring	/LL	2	I098
4	997 347 373 00	sealing ring	/LL	2	I098
5	999 512 645 09	hose clamp		2	
6	997 347 322 01	joint		2	
7	999 034 037 09	hexagon nut M 14 X 1,5		2	
8	996 347 131 04	track rod		2	
9		see illustrations 4/01/00 POS.2			
10	900 378 100 01	hexagon-head bolt AM 10 X 45		2	
11	999 084 449 09	hexagon nut M 12 X 1,5		2	

Model	Year	MG	SG	Illustration	Restrictions	UPD	20:13	06.02.2010
997T2	2010	4	03	403-01		248	USA / CANADA	

PORSCHE PET PORSCHE

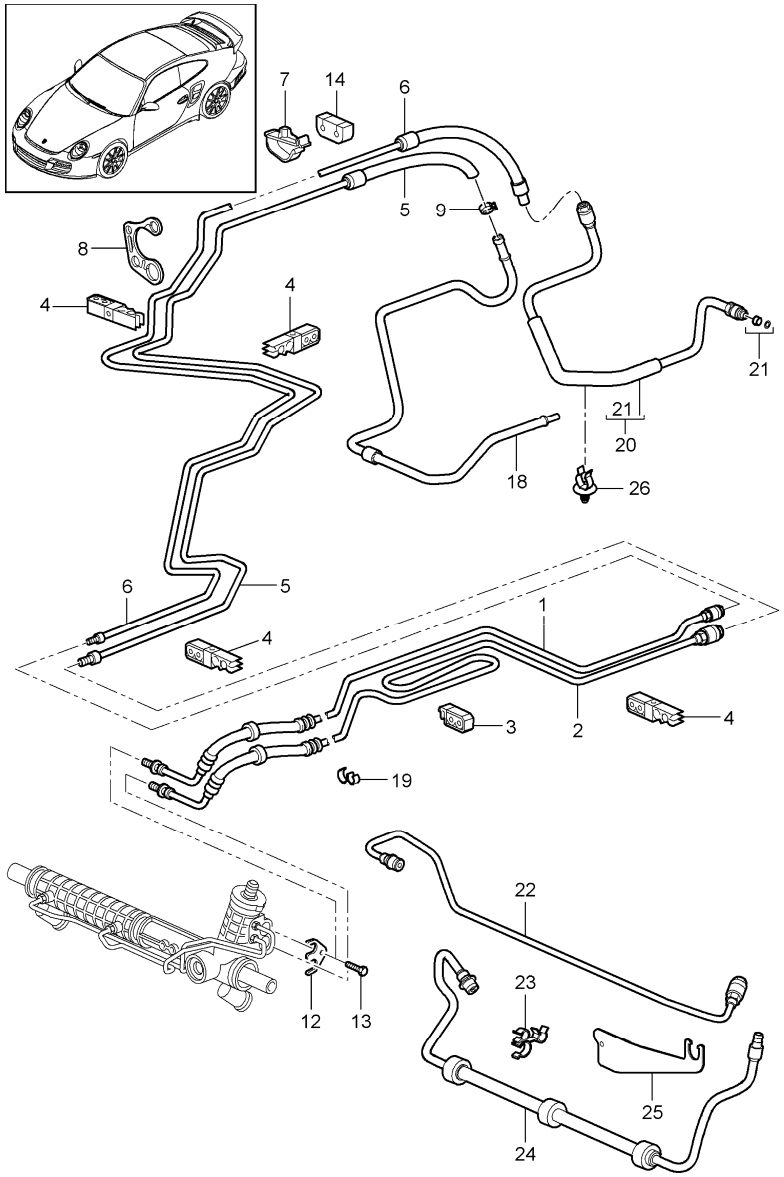

Pos	Part Number	Description	Remark	Qty	Model
		power steering lines			
1	997 347 451 11	pressure line		1	I098
2	997 347 449 11	return line		1	I098
3	996 347 543 00	cable holder		X	
4	996 355 543 00	support		1	
5	997 347 439 12	return line centre		1 1	
6	997 347 445 12	pressure line centre		1 1	
7	996 347 549 01	support		2	
8	997 347 544 00	support		1	
9	999 512 639 09	spring clamp		1	
12	996 347 769 01	tension shackle		1	
13	900 067 063 03	pan-head screw M 10 x 20		1	
14	996 347 551 01	retainer plate		1	
18	9A1 347 441 03	return line		1	
19	999 507 091 40	cable holder		3	
20	9A1 347 443 02	pressure line		1	
21	997 347 945 00	repair kit -PENTOSIN-		X	
26	999 507 136 41	cable holder		1	

Model	Year	MG	SG	Illustration	Restrictions	UPD	20:13	06.02.2010	PORSCHE	PET	PORSCHE
997T2	2010	4	03	403-03		248	USA / CANADA				

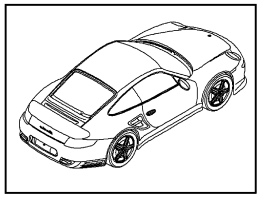

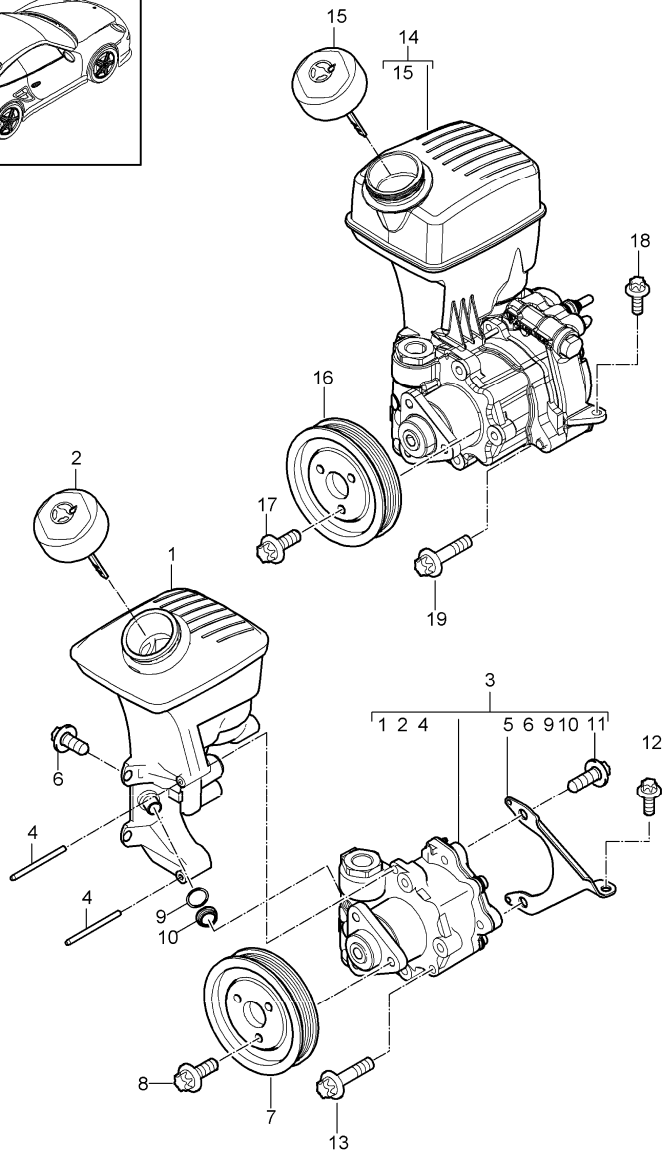

Pos	Part Number	Description	Remark	Qty	Model
		power steering power-steering pump container			
1	9A1 314 220 05	oil tank		1	I250
2	9A1 314 223 02	lid		1	I250
(3)	9A1 314 020 04	power-steering pump		1	I250
4	996 314 320 03	straight pin		2	I250
5	9A1 314 430 02	bracket		1	I250
6	900 385 044 01	torx screw BM 8 X 16		2	I250
7	9A1 147 123 00	pulley		1	I250
8	900 385 099 01	torx screw BM 8 X 12		3	I250
9		sealing ring 12,5 X 2,15		1	I250
10		guide		1	I250
11	900 385 044 01	torx screw BM 8 X 16		2	I250
12	900 385 009 01	torx screw BM 6 X 16		1	I250
13	900 385 042 01	torx screw BM 8 X 35		2	I250
-	000 043 203 33	pentosin 1000 ML		X	
14	9A1 314 020 33	power-steering pump		1	I480
15	9A1 314 223 32	lid		1	I480
16	9A1 147 123 00	pulley		1	I480
17	900 385 099 01	torx screw BM 8 X 12		3	I480
18	900 385 009 01	torx screw BM 6 X 16		1	I480
19	900 385 042 01	torx screw BM 8 X 35		2	I480

Model	Year	MG	SG	Illustration	Restrictions	UPD	20:13	06.02.2010
997T2	2010	4	03	403-04		248	USA / CANADA	

PORSCHE PET PORSCHE

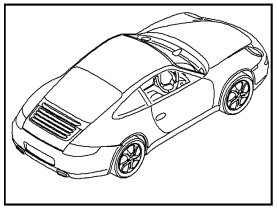

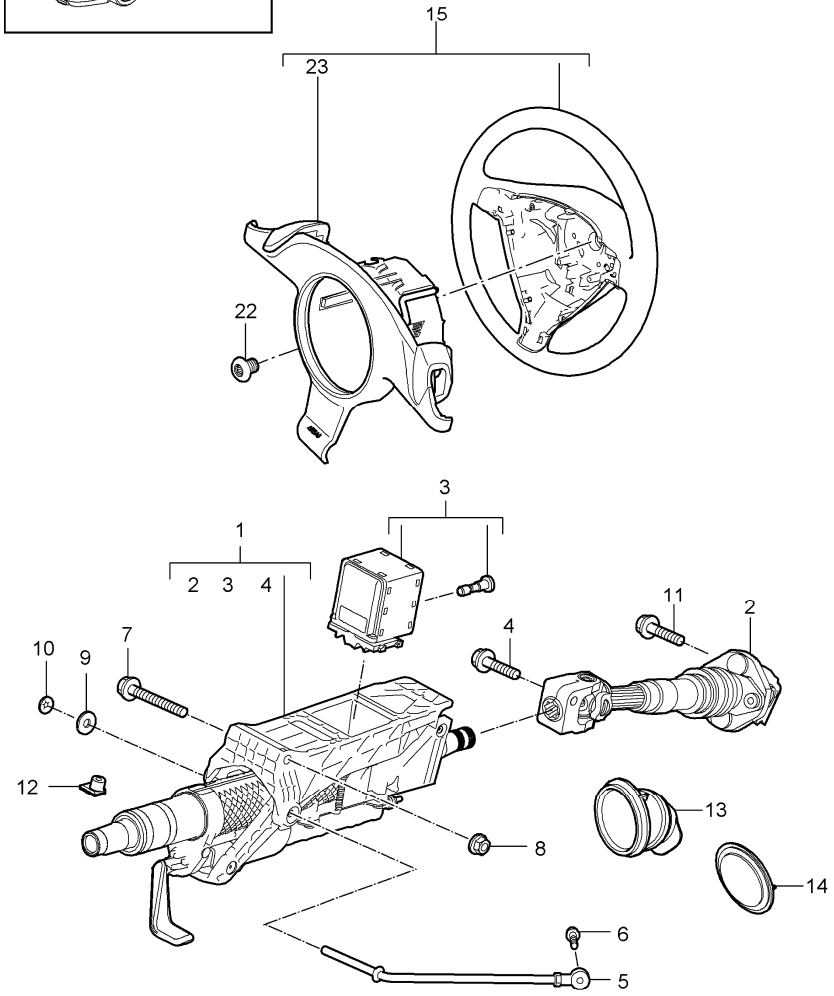

Pos	Part Number	Description	Remark	Qty	Model
		steering outer tube steering shaft steering wheels			I250
(1)	997 347 007 10	steering column complete steering shaft		1	
2	997 347 023 04	intermed. steering shaft		1	
3	997 618 158 04	control unit steering column with screw		1	
4	A 999 217 042 03	hexagon-head bolt M 8 X 35		1	
4	999 217 042 04	hexagon-head bolt M 8 X 35		1	
5	997 347 243 00	support		1	
6	900 378 173 01	hexagon-head bolt M 6 x 20		1	
7	900 378 095 01	hexagon-head bolt M 10 X 100		1	
8	900 380 008 01	hexagon nut M 10		1	
9	900 151 006 03	washer		1	
10	999 507 217 07	clamping washer		1	
11	A 999 217 042 03	hexagon-head bolt M 8 X 35		1	
11	999 217 042 04	hexagon-head bolt M 8 X 35		1	
12	999 920 019 40	plug-in nut 3,5 X 2,5 X 9		1	
13	986 347 037 01	bellows		1	
14	996 347 339 02	rubber seal bulkhead		1	
15	997 347 803 32	steering wheel plain leather		1	I841
	A34	black			
	B24	stone grey			

Pos	Part Number	Description	Remark	Qty	Model
	T24	sand beige			
	E24	sea blue			
	M24	terracotta			
	R24	cocoa			
	D14	dark grey/natural			
	T34	brown/natural			
	N14	carrera red			
(15)	997 347 803 37	steering wheel plain leather		1	I841 I345
	A34	black			
	B24	stone grey			
	T24	sand beige			
	E24	sea blue			
	M24	terracotta			
	R24	cocoa			
	D14	dark grey/natural			
	T34	brown/natural			
	N14	carrera red			
(15)	997 347 803 33	steering wheel plain leather multi-function		1	I844
	A34	black			
	B24	stone grey			
	T24	sand beige			
	E24	sea blue			
	M24	terracotta			
	R24	cocoa			
	D14	dark grey/natural			
	T34	brown/natural			
	N14	carrera red			

Pos	Part Number	Description	Remark	Qty	Model
(15)	997 347 803 36	steering wheel plain leather multi-function		1	I844 I345
	A34	black			
	B24	stone grey			
	T24	sand beige			
	E24	sea blue			
	M24	terracotta			
	R24	cocoa			
	D14	dark grey/natural			
	T34	brown/natural			
	N14	carrera red			
(15)	997 347 803 34	steering wheel multi-function carbon		1	I845 I345
	A34	black			
	B24	stone grey			
	T24	sand beige			
	E24	sea blue			
	M24	terracotta			
	R24	cocoa			
	D14	dark grey/natural			
	T34	brown/natural			
	N14	carrera red			
(15)	997 347 803 35	steering wheel multi-function macassar		1	I847 I345
	A34	black			
	B24	stone grey			
	T24	sand beige			
	E24	sea blue			
	M24	terracotta			

Pos	Part Number	Description	Remark	Qty	Model
	R24	cocoa			
	D14	dark grey/natural			
	T34	brown/natural			
	N14	carrera red			
(15)	997 347 980 09	steering wheel multi-function aluminium look		1	IXPU I345
	A34	black			
	B24	stone grey			
	T24	sand beige			
	E24	sea blue			
	M24	terracotta			
	R24	cocoa			
	D14	dark grey/natural			
	T34	brown/natural			
	N14	carrera red			
15	997 347 803 03	steering wheel plain leather		1	I841 I639/640
	A34	black			
	B24	stone grey			
	T24	sand beige			
	E24	sea blue			
	M24	terracotta			
	R24	cocoa			
	D14	dark grey/natural			
	T34	brown/natural			
	N14	carrera red			
(15)	997 347 803 16	steering wheel plain leather		1	I841 I639/640
	A34	black			I345
	B24	stone grey			
	T24	sand beige			
	E24	sea blue			
	M24	terracotta			
	R24	cocoa			
	D14	dark grey/natural			
	T34	brown/natural			
	N14	carrera red			
(15)	997 347 803 10	steering wheel plain leather multi-function		1	I844 I639/640
	A34	black			
	B24	stone grey			
	T24	sand beige			
	E24	sea blue			
	M24	terracotta			
	R24	cocoa			
	D14	dark grey/natural			
	T34	brown/natural			
	N14	carrera red			
(15)	997 347 803 15	steering wheel plain leather multi-function		1	I844 I639/640 I345
	A34	black			
	B24	stone grey			
	T24	sand beige			
	E24	sea blue			
	M24	terracotta			
	R24	cocoa			
	D14	dark grey/natural			
	T34	brown/natural			
	N14	carrera red			

Pos	Part Number	Description	Remark	Qty	Model
(15)	997 347 803 11	steering wheel multi-function carbon		1	I845 I639/640 I345
	A34	black			
	B24	stone grey			
	T24	sand beige			
	E24	sea blue			
	M24	terracotta			
	R24	cocoa			
	D14	dark grey/natural			
	T34	brown/natural			
	N14	carrera red			
(15)	997 347 803 13	steering wheel multi-function macassar		1	I847 I639/640 I345
	A34	black			
	B24	stone grey			
	T24	sand beige			
	E24	sea blue			
	M24	terracotta			
	R24	cocoa			
	D14	dark grey/natural			
	T34	brown/natural			
	N14	carrera red			
(15)	997 347 980 06	steering wheel multi-function aluminium look		1	IXPU I639/640 I345
	A34	black			
	B24	stone grey			
	T24	sand beige			
	E24	sea blue			
	M24	terracotta			
	R24	cocoa			
	D14	dark grey/natural			
	T34	brown/natural			
	N14	carrera red			
(15)	997 347 803 30	steering wheel paddle		1	I840
	A34	black			
	B24	stone grey			
	T24	sand beige			
	E24	sea blue			
	M24	terracotta			
	R24	cocoa			
	D14	dark grey/natural			
	T34	brown/natural			
	N14	carrera red			
(15)	997 347 803 31	steering wheel Paddle		1	I840 I639/640
	A34	black			
	B24	stone grey			
	T24	sand beige			
	E24	sea blue			
	M24	terracotta			
	R24	cocoa			
	D14	dark grey/natural			
	T34	brown/natural			
	N14	carrera red			
22	N 910 207 01	screw M 18 X 1,5 X 26		1	
23	997 613 461 00	module		1	I841

Pos	Part Number	Description	Remark	Qty	Model
	FUP	volcano grey/galvanosilver			
(23)	997 613 465 00	module		1	I844/845/847
	FUQ	volcano grey/galvanosilver			
			.		
-	000 043 207 50	mixing tube		X	
-	000 043 207 48	adhesive set steering wheel see technical manual suspension group 48 12 55		1	

Pos	Part Number	Description	Remark	Qty	Model

Model	Year	MG	SG	Illustration	Restrictions	UPD	20:13	06.02.2010
997T2	2010	4	03	403-05		248	USA / CANADA	

PORSCHE PET PORSCHE

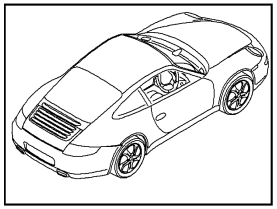

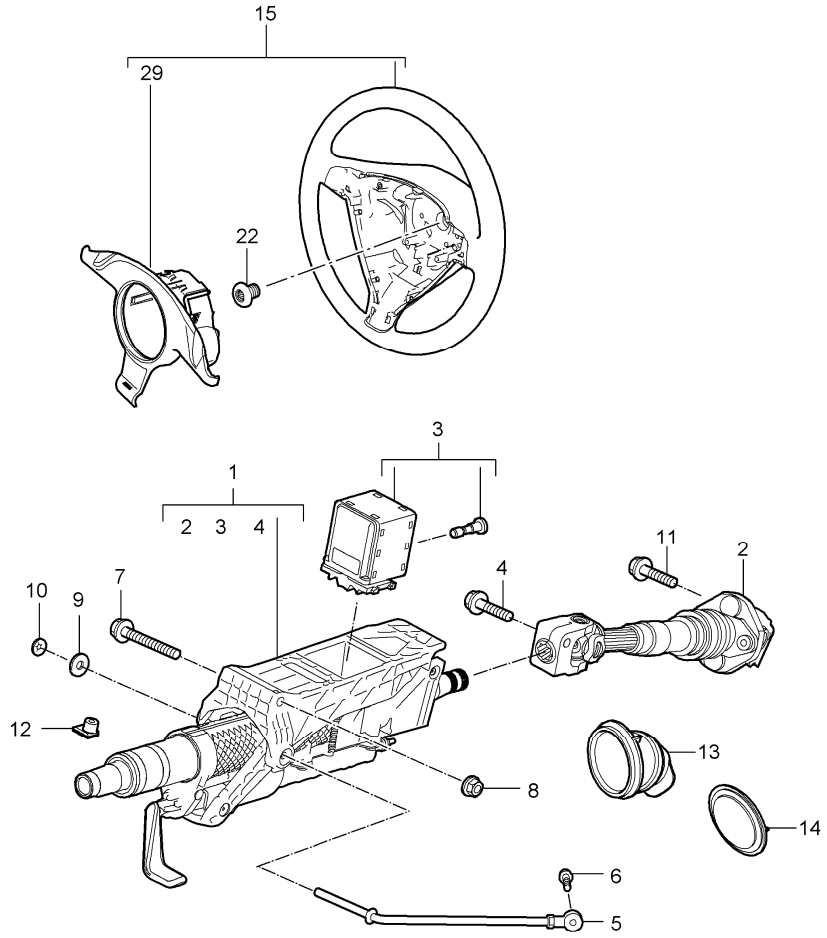

Pos	Part Number	Description	Remark	Qty	Model
		steering outer tube steering shaft steering wheels			I480
1	997 347 007 10	steering column complete steering shaft		1	
2	997 347 023 04	intermed. steering shaft		1	
3	997 618 158 04	control unit steering column with screw		1	
4	A 999 217 042 03	hexagon-head bolt M 8 X 35		1	
4	999 217 042 04	hexagon-head bolt M 8 X 35		1	
5	997 347 243 00	support		1	
6	900 378 173 01	hexagon-head bolt M 6 x 20		1	
7	900 378 095 01	hexagon-head bolt M 10 X 100		1	
8	900 380 008 01	hexagon nut M 10		1	
9	900 151 006 03	washer		1	
10	999 507 217 07	clamping washer		1	
11	A 999 217 042 03	hexagon-head bolt M 8 X 35		1	
11	999 217 042 04	hexagon-head bolt M 8 X 35		1	
12	999 920 019 40	plug-in nut 3,5 X 2,5 X 9		1	
13	986 347 037 01	bellows		1	
14	996 347 339 02	rubber seal bulkhead		1	
(15)	997 347 803 51	steering wheel leather		1	I841
	A34	black			
	B24	stone grey			

Pos	Part Number	Description	Remark	Qty	Model
	T24	sand beige			
	E24	sea blue			
	R24	cocoa			
	M24	terracotta			
	D14	dark grey			
	T34	brown/natural			
	N14	carrera red			
(15)	997 347 803 57	steering wheel leather		1	I345/841
	A34	black			
	B24	stone grey			
	T24	sand beige			
	E24	sea blue			
	R24	cocoa			
	M24	terracotta			
	D14	dark grey			
	T34	brown/natural			
	N14	carrera red			
(15)	997 347 803 52	steering wheel leather		1	I844
	A34	black			
	B24	stone grey			
	T24	sand beige			
	E24	sea blue			
	R24	cocoa			
	M24	terracotta			
	D14	dark grey			
	T34	brown/natural			
	N14	carrera red			
(15)	997 347 803 58	steering wheel leather		1	I345/844
	A34	black			
	B24	stone grey			
	T24	sand beige			
	E24	sea blue			
	R24	cocoa			
	M24	terracotta			
	D14	dark grey			
	T34	brown/natural			
	N14	carrera red			
(15)	997 347 803 53	steering wheel leather		1	I345/845
	A34	black			
	B24	stone grey			
	T24	sand beige			
	E24	sea blue			
	R24	cocoa			
	M24	terracotta			
	D14	dark grey			
	T34	brown/natural			
	N14	carrera red			
(15)	997 347 803 55	steering wheel leather		1	I345/847
	A34	black			
	B24	stone grey			
	T24	sand beige			
	E24	sea blue			
	R24	cocoa			
	M24	terracotta			

Pos	Part Number	Description	Remark	Qty	Model
	D14	dark grey			
	T34	brown/natural			
	N14	carrera red			
(15)	997 347 980 08	steering wheel leather		1	IXPU/345
	A34	black			
	B24	stone grey			
	T24	sand beige			
	E24	sea blue			
	R24	cocoa			
	M24	terracotta			
	D14	dark grey			
	T34	brown/natural			
	N14	carrera red			
22	N 910 207 01	screw M 18 X 1,5 X 26		1	
29	997 613 463 01	model		1	I480
	FUR	volcano grey/black mat			
			.		
-	000 043 207 50	mixing tube		X	
-	000 043 207 48	adhesive set steering wheel see technical manual suspension group 48 12 55		1	

Model	Year	MG	SG	Illustration	Restrictions	UPD	20:13	06.02.2010	PORSCHE	PET	PORSCHE
997T2	2010	4	03	403-06		248	USA / CANADA				

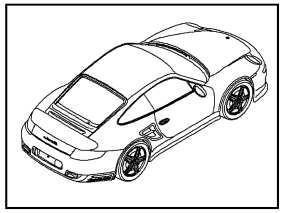

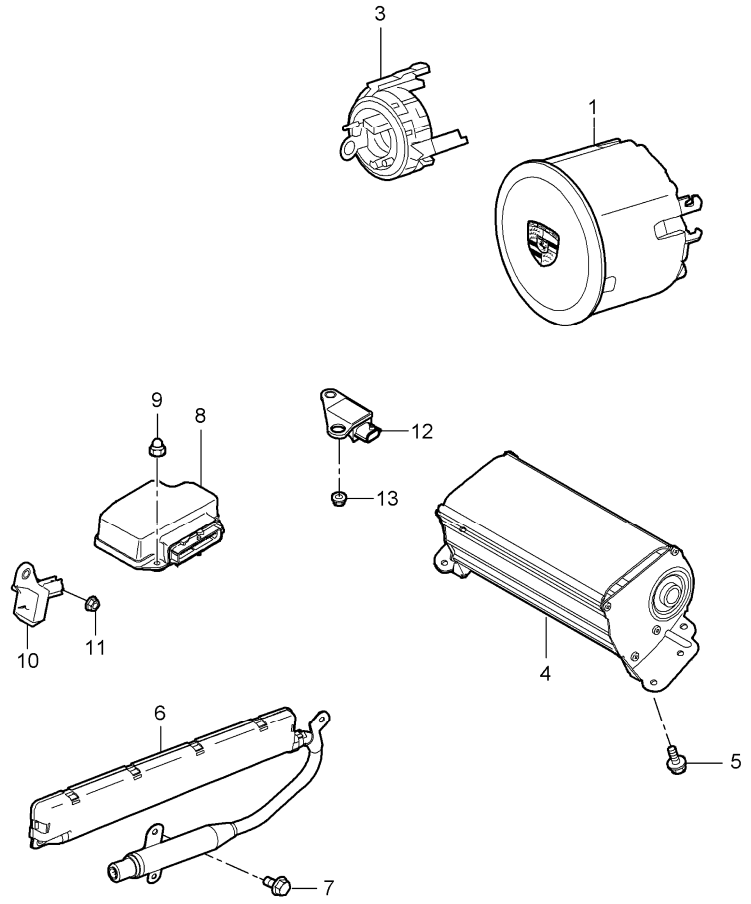

Pos	Part Number	Description	Remark	Qty	Model
		airbag			
1	997 803 089 12	airbag unit leather		1	
	A34	black			
	B24	stone grey			
	T24	sand beige			
	E24	sea blue			
	M24	terracotta			
	R24	cocoa			
	D14	dark grey/natural			
	T34	brown/natural			
	N14	carrera red			
3	955 652 211 11	spring with steering-angle sensor		1	
4	997 803 071 08	airbag unit passenger's side		1	
5	900 378 222 01	hexagon-head bolt M 6 X 16		4	
6	997 803 091 04	side airbag for head airbag	/L	1	
(6)	997 803 092 04	side airbag for head airbag	/R	1	
7	900 378 035 01	hexagon-head bolt M 6 X 16		6	
8	997 618 217 08	control unit		1	COUPE
(8)	997 618 219 09	control unit		1	CABRIO
9	999 070 015 02	cap nut M 6		3	
10	997 618 221 01	sensor side airbag		2	
11	999 084 629 01	hexagon nut M 6		8	

Pos	Part Number	Description	Remark	Qty	Model
12	997 618 223 02	acceleration sensor airbag front		2	
13	999 084 638 01	hexagon nut M 6 SB		2	

Model	Year	MG	SG	Illustration	Restrictions	UPD	20:14	06.02.2010	PORSCHE	PET	PORSCHE
997T2	2010	5	01	501-00		248	USA / CANADA				

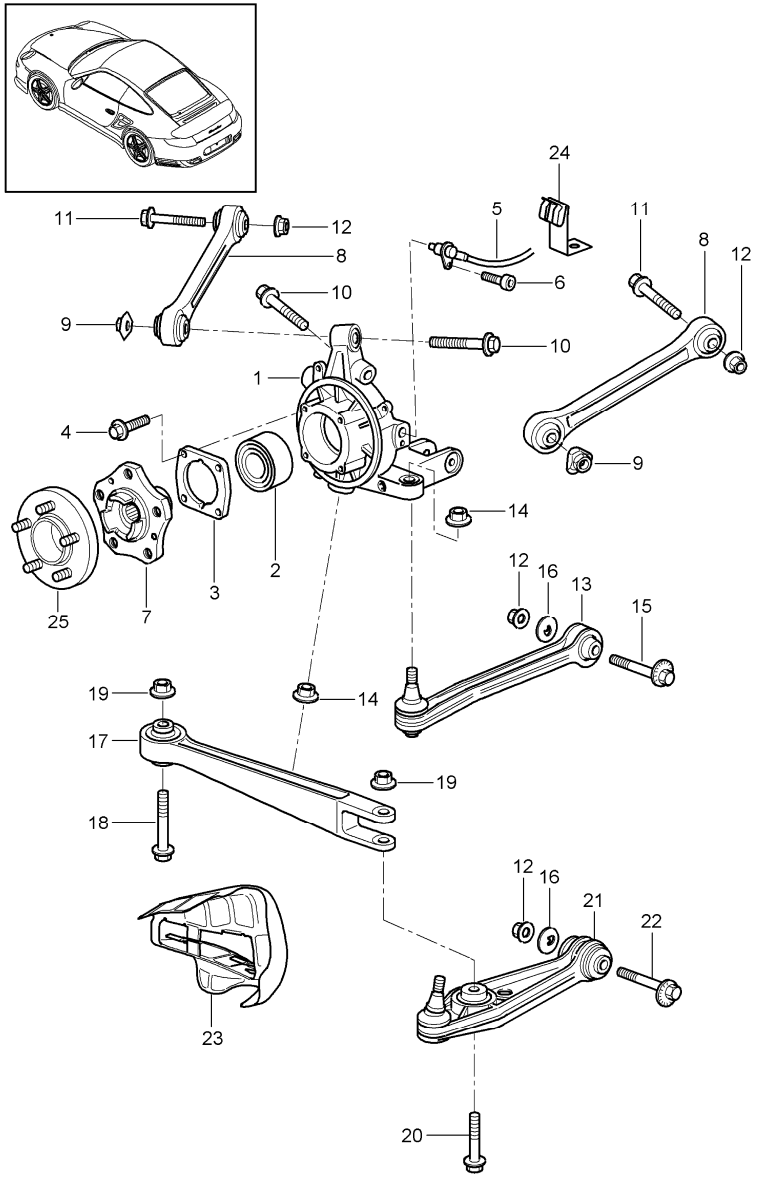

Pos	Part Number	Description	Remark	Qty	Model
		rear axle wheel carrier control arm wheel hub			
1	997 331 111 07	wheel carrier	/L	1	
(1)	997 331 112 07	wheel carrier	/R	1	
2	999 053 055 02	angular-contact bearing		2	
3	996 331 661 01	lid		2	
(4)	999 217 042 04	hexagon-head bolt M 8 X 35		8	
5	997 606 407 01	speed sensor		2	
(6)	900 067 117 04	pan-head screw M 6 x 16		2	
7	997 331 605 00	wheel hub		2	
(7)	997 331 607 02	wheel hub		2	I422
8	997 331 047 01	wishbone		2	
(9)	999 084 445 01	lock nut M 12 x 1,5		4	
10	900 378 138 01	hexagon-head bolt M 12 X 70		4	
11	900 378 165 01	hexagon-head bolt M 12 X 95		4	
(12)	999 084 445 01	lock nut M 12 x 1,5		10	
13	997 331 045 04	track rod		2	
14	999 084 449 09	hexagon nut M 12 X 1,5		4	
15	997 331 217 02	eccentric screw M 12 X 83		2	
16	996 331 219 00	eccentric washer		2	
17	997 331 043 01	control arm		2	
(18)	900 378 051 01	hexagon-head bolt M 14 x 100		2	
19	A 900 380 012 09	hexagon nut M 14 X 1,5		4	

Pos	Part Number	Description	Remark	Qty	Model
19	900 380 012 01	hexagon nut M 14 X 1,5		4	
(20)	900 378 135 01	hexagon-head bolt M 14 x 1,5 x 75		2	
21	997 331 053 02	wishbone		2	
22	997 331 217 03	eccentric screw		2	
23	997 331 487 02	spoiler	/L	1	
(23)	997 331 488 02	spoiler	/R	1	
24	999 507 530 00	cable holder speed sensor		2	

Pos	Part Number	Description	Remark	Qty	Model

Model	Year	MG	SG	Illustration	Restrictions	UPD	20:14	06.02.2010	PORSCHE	PET	PORSCHE
997T2	2010	5	01	501-01		248	USA / CANADA				

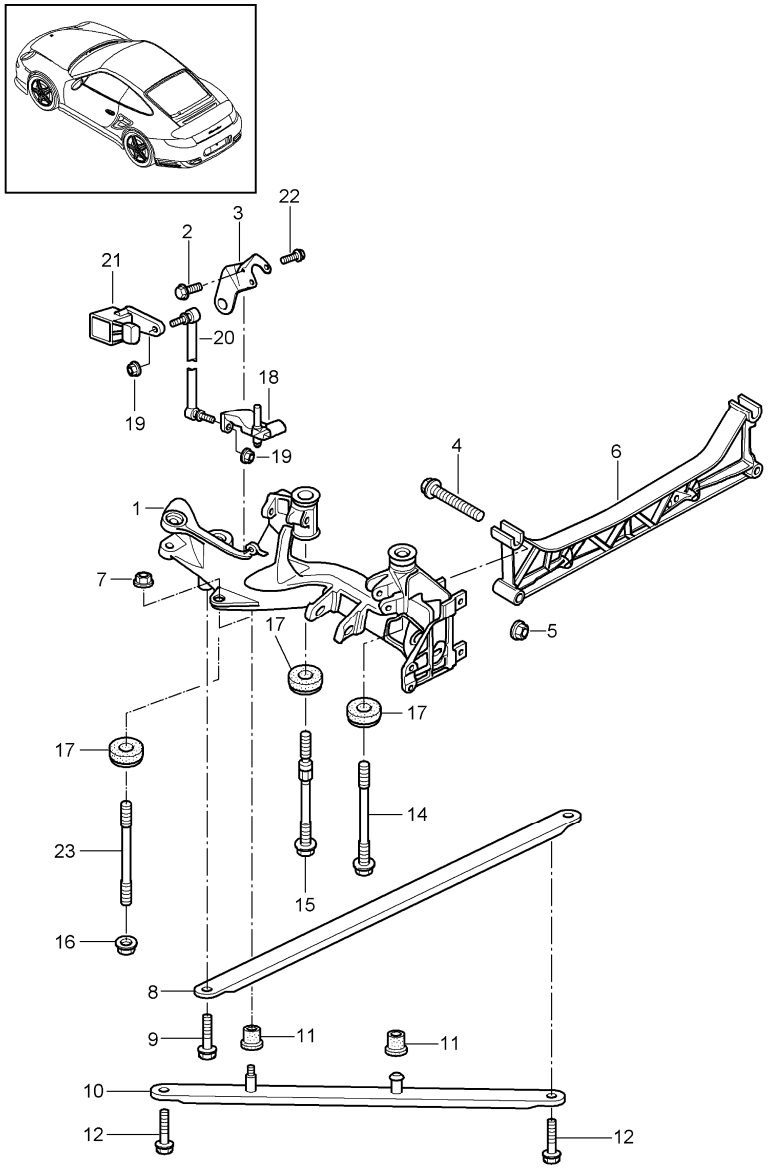

Pos	Part Number	Description	Remark	Qty	Model
		rear axle side section bracket			
1	997 331 051 05	side section	/L	1	
(1)	997 331 052 05	side section	/R	1	
2	900 067 117 04	pan-head screw m 6 x 16		2	
3	997 355 505 02	support for brake hose	/L	1	
(3)	997 355 506 02	support for brake hose	/R	1	
4	900 378 139 01	hexagon-head bolt M 12 x 1,5 x 80		4	
5	999 084 445 01	lock nut M 12 x 1,5		4	
6	997 331 061 00	cross member		1	
7	999 076 053 01	hexagon nut M 10		2	
8	997 331 171 20	transverse strut front		1	
-	999 591 629 01	captive nut underbody protection		X	
9	999 073 443 01	combination screw M 10 X 1,5 X 40		2	
10	997 331 081 02	strut		2	
-	999 591 629 01	captive nut underbody protection		X	
11	996 331 385 00	rubber mounting		6	
12	A 900 378 072 09	hexagon-head bolt M 12 X 1,5 X 30		2	
12	900 378 072 01	hexagon-head bolt M 12 X 1,5 X 30		2	
14	900 178 010 01	hexagon-head bolt M 12 x 130		2	
15	900 178 010 01	hexagon-head bolt M 12 x 130		2	

Pos	Part Number	Description	Remark	Qty	Model
16	999 084 445 01	lock nut M 12 x 1,5		2	
17	997 331 291 00	washer		6	
18	996 341 371 03	support		1	I603
19	900 380 015 01	hexagon nut VM 6		2	I603
20	997 331 375 03	strut		1	I603
21	997 631 121 00	sensor		1	I603
22	900 146 003 03	oval-head screw M 5 x 10		2	I603
23	999 061 103 01	stud M 12 X 1,5		2	

Pos	Part Number	Description	Remark	Qty	Model

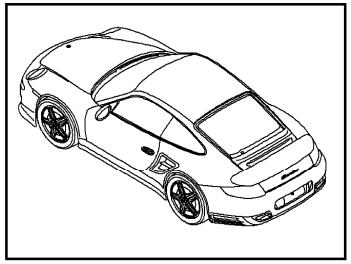

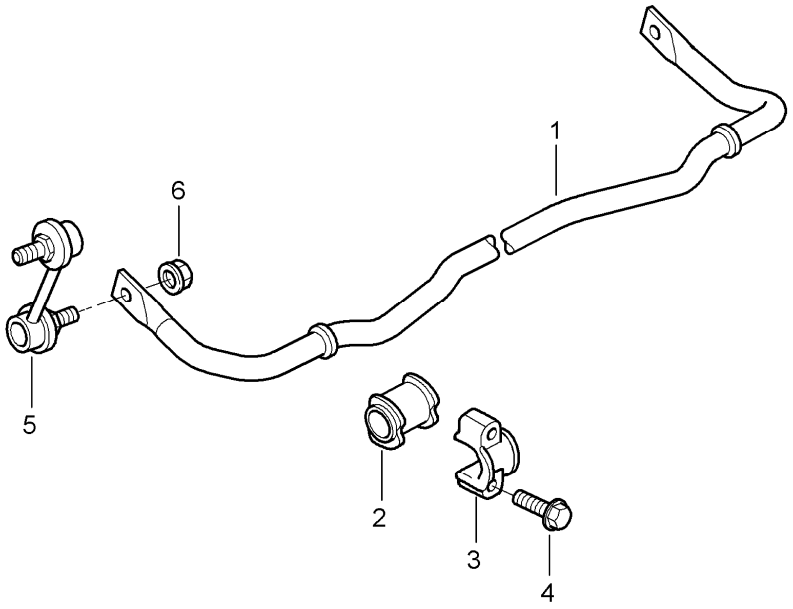

Pos	Part Number	Description	Remark	Qty	Model
		stabiliser			
1	997 333 703 03	stabiliser		1	
2	996 333 792 26	stabiliser mounting		2	
3	996 333 777 01	bearing clamp		2	
4	900 378 055 01	hexagon-head bolt AM 8 X 40		4	
5	997 333 069 06	stabiliser mounting	/L	1	
(5)	997 333 070 06	stabiliser mounting	/R	1	
6	999 084 643 09	hexagon nut M 10		2	

Model	Year	MG	SG	Illustration	Restrictions	UPD	20:14	06.02.2010	PORSCHE PET PORSCHE
997T2	2010	5	01	501-05		248	USA / CANADA		

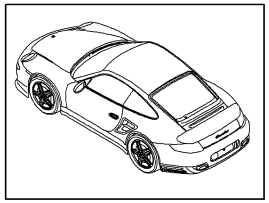

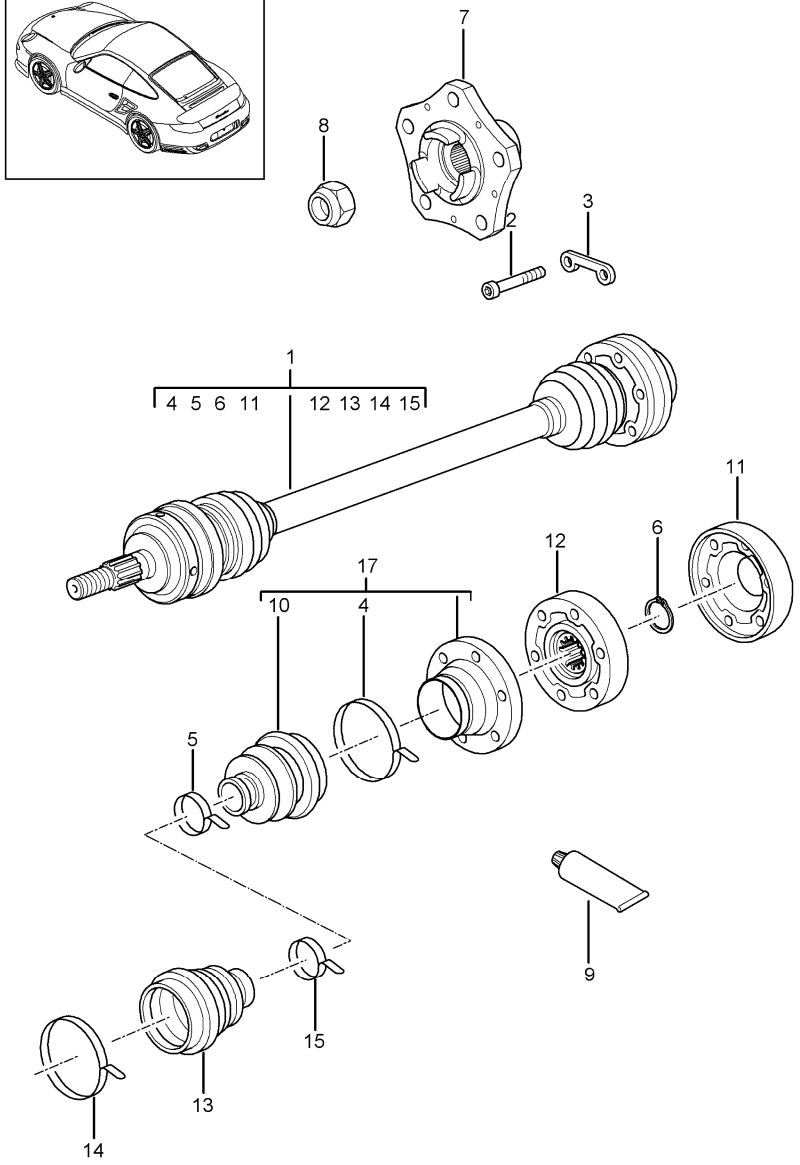

Pos	Part Number	Description	Remark	Qty	Model
		drive shaft wheel hub			
1	997 332 024 42	drive shaft		2	I480
(1)	997 332 024 56	drive shaft		2	I250
2	999 073 517 01	pan-head screw M 10 X 1 X 46,5		12	
3	996 332 191 00	plate		6	
4	997 332 257 00	clip		2	
5	996 332 957 00	clip		2	
6	900 041 055 01	circlip		2	
7	997 331 605 00	wheel hub		2	I421
(7)	997 331 607 02	wheel hub		2	I422
8	999 084 641 01	lock nut M 22 X 1,5		2	
9	000 043 110 01	grease 1 100-gramme tube		X	
(9)	000 043 205 36	sealing compound drive shaft 1 100-gramme tube		X	
10	997 332 293 00	dust bellows		2	
11	997 332 267 00	lid		2	
12	997 332 033 00	joint		2	
13	997 332 293 00	dust bellows		2	
14	997 332 257 00	clip		2	
15	996 332 957 00	clip		2	
17	997 332 955 01	bellow support with bellows		2	

Model	Year	MG	SG	Illustration	Restrictions	UPD	20:14	06.02.2010	PORSCHE PET PORSCHE
997T2	2010	5	02	502-00		248	USA / CANADA		

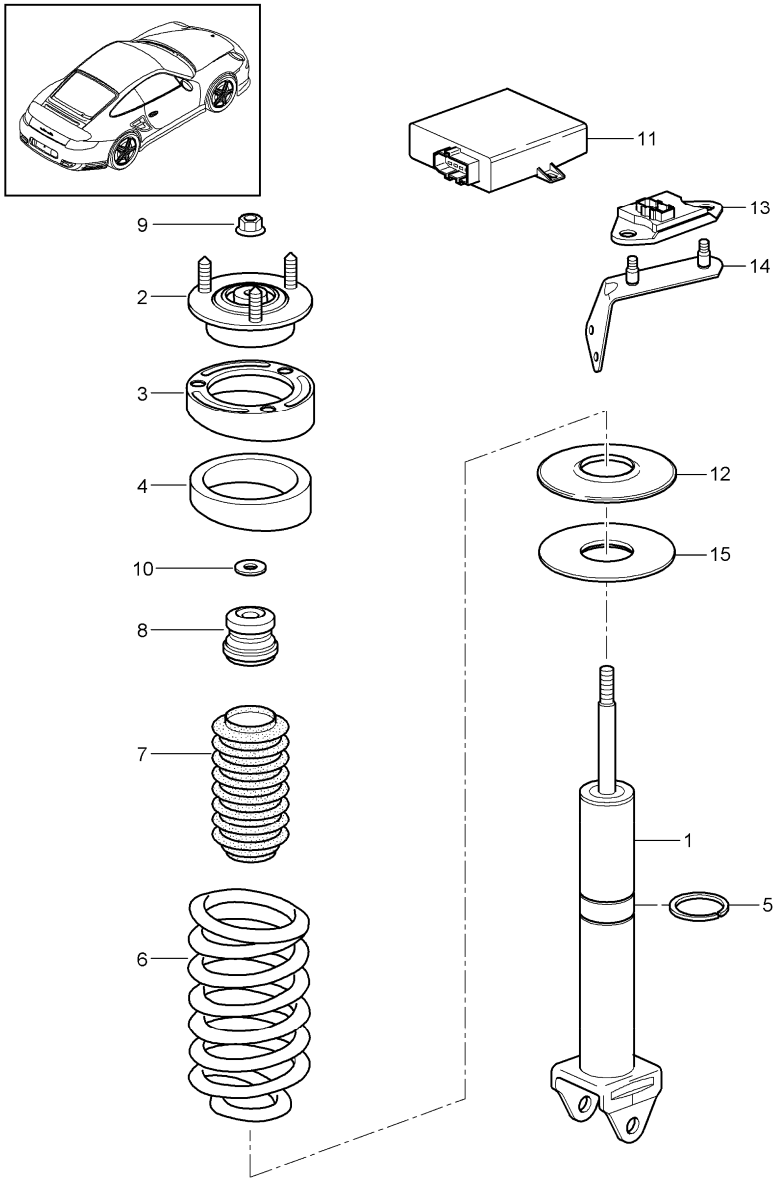

Pos	Part Number	Description	Remark	Qty	Model
		shock absorber coil spring			
1	997 333 053 26	vibration damper		2	
		mount shock absorber			
-	900 378 138 01	hexagon-head bolt M 12 X 1,5 X 70		2	
-	999 084 445 01	lock nut M 12 x 1,5		2 2	
2	997 333 061 01	supporting mount		2	
-	900 380 008 01	hexagon nut M 10		12	
3	996 333 511 02	compensating plate 0,5 MM		X	
(3)	996 333 511 03	compensating plate 4,0 MM		X	
4	997 333 504 01	base		2	
5	999 152 163 00	circlip SW 52		2	
6	997 333 531 68	coil spring 1 set		1	
	504	identification white white green			
7	993 333 107 01	bellows		2	
8	997 333 105 01	additional spring		2	
9	999 084 050 02	hexagon nut M 12 X 1		2	
10	999 025 271 02	washer		2	
11	997 618 460 01	control unit shock absorber		1	
-	997 618 205 00	support for control unit		1	
12	997 333 513 03	concave washer		2	

Pos	Part Number	Description	Remark	Qty	Model
13	997 606 111 01	acceleration sensor body		1	
14	997 606 214 01	support acceleration sensor		1 1	
15	997 333 523 02	concave washer		2	

Pos	Part Number	Description	Remark	Qty	Model

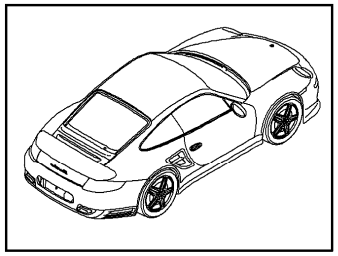

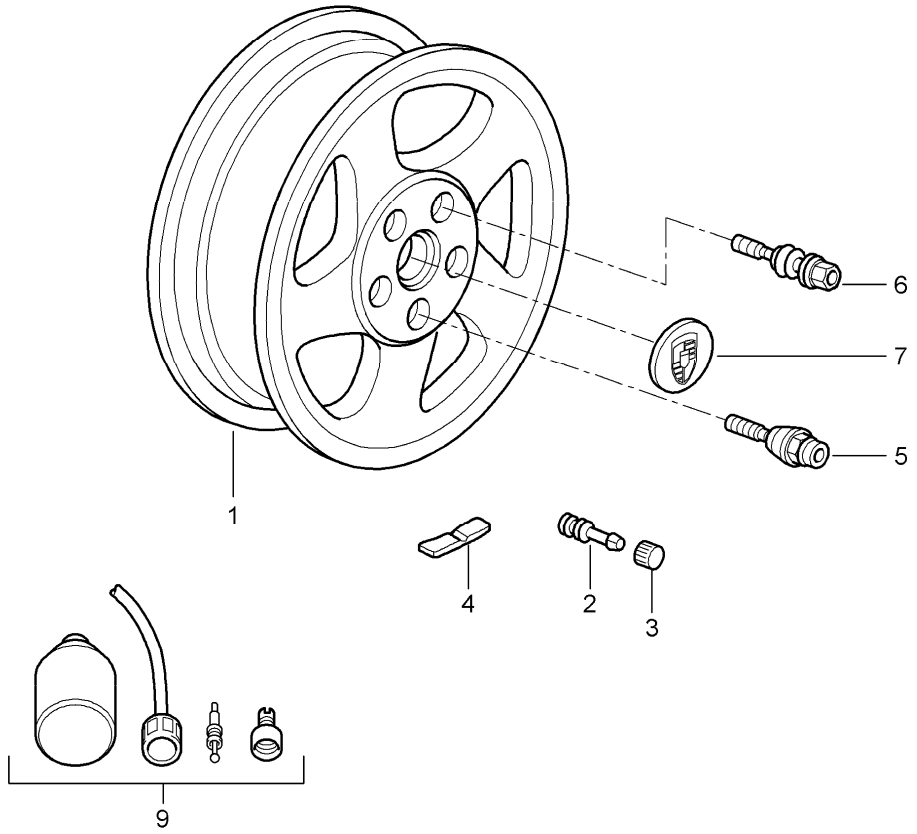

Pos	Part Number	Description	Remark	Qty	Model
		wheels			
(1)	997 362 156 55	disc wheel 8,5 J X 19 ET 55	/V	2	IXRR
1	997 362 157 05	disc wheel 8,5 J X 19 ET 56	/V	2	I421
(1)	997 362 162 56	disc wheel 11,5 J x 19 ET 50	/H	2	IXRR
(1)	997 362 163 02	disc wheel 11 J x 19 ET 51	/H	2	I421
2	900 265 001 50	rubber valve rubber		4	
-		valve tyre pressure monitoring see group 6/01/05			I482/483
3	955 361 163 00	cap for rubber valve		4	
(4)	997 361 405 00	balance stick-on weight 5.G.		X	
(4)	997 361 410 00	balance stick-on weight 10 G.		X	
(4)	997 361 415 00	balance stick-on weight 15 G.		X	
(4)	997 361 420 00	balance stick-on weight 20 G.		X	
(4)	997 361 425 00	balance stick-on weight 25 G.		X	
(4)	997 361 430 00	balance stick-on weight 30 G.		X	
(4)	997 361 435 00	balance stick-on weight 35 G.		X	
(4)	997 361 440 00	balance stick-on weight 40 G.		X	
(4)	997 361 445 00	balance stick-on weight 45 G.		X	

Pos	Part Number	Description	Remark	Qty	Model
(4)	997 361 450 00	balance stick-on weight 50 G.		X	
(4)	997 361 455 00	balance stick-on weight 55 G.		X	
(4)	997 361 460 00	balance stick-on weight 60 G.		X	
(4)	997 361 465 00	balance stick-on weight 65 G.		X	
(4)	997 361 470 00	balance stick-on weight 70 G.		X	
(4)	997 361 475 00	balance stick-on weight 75 G.		X	
(4)	997 361 480 00	balance stick-on weight 80 G.		X	
(4)	997 361 485 00	balance stick-on weight 85 G.		X	
(4)	997 361 490 00	balance stick-on weight 90 G.		X	
5	997 361 057 02	set anti-theft protection 1 set		1	COUPE CABRIO
6	997 361 203 01	wheel bolt		16	COUPE CABRIO
7	7PP 601 149	hub cap		4	I421
7	7PP 601 149 A	hub cap		4	I421/446
-	999 914 001 40	plastic gloves		X	I447
(9)	955 722 631 00	compressed air bottle		1	
(9)	997 652 057 00	compressor for emergency wheel		1	I447
-	996 362 020 04	emergency wheel grey cast iron brake		1	I447
-	997 362 050 00	emergency wheel pccb brake		1	I447/450

Model	Year	MG	SG	Illustration	Restrictions	UPD	20:15	06.02.2010
997T2	2010	6	01	601-01		248	USA / CANADA	

PORSCHE PET PORSCHE

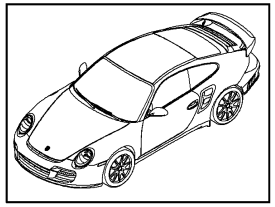

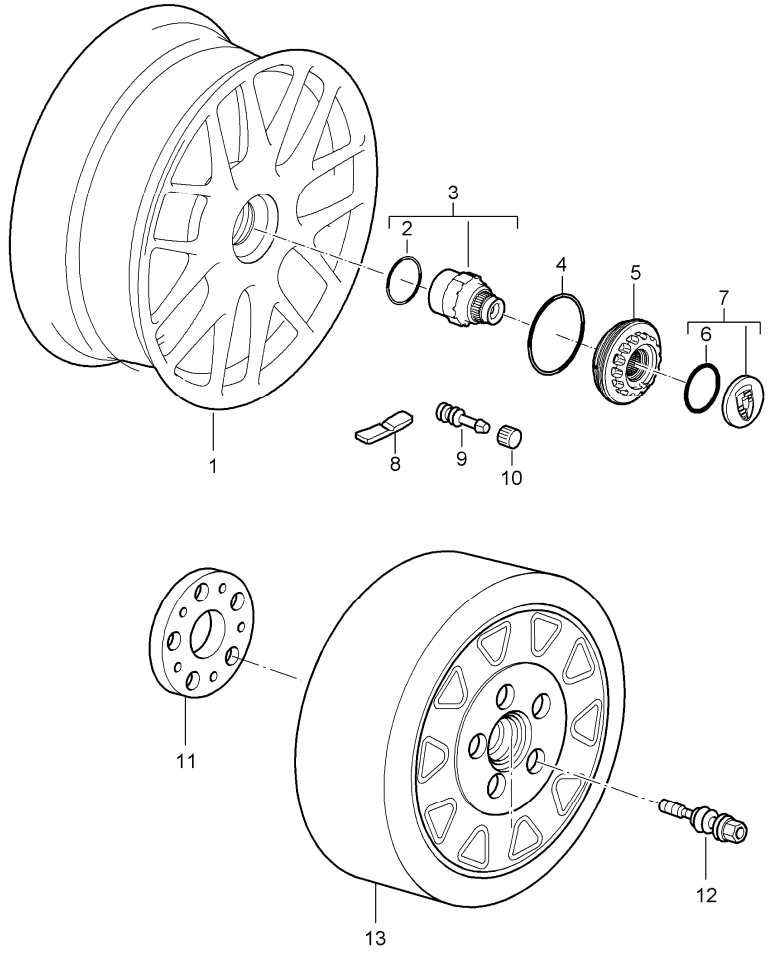

Pos	Part Number	Description	Remark	Qty	Model
		central locking			I422
					I447
1	997 362 157 06	disc wheel 8,5 J X 19 ET 56	/V	2	
(1)	997 362 163 04	disc wheel 11 J X 19 ET 51	/H	2	
2	999 707 012 40	o-ring 37 X 2,5 N		4	
3	997 341 251 04	locking device		2	
4	999 707 648 40	o-ring 92,00 X 3,5		4	
5	997 361 081 05	fastening screw		4	
6	999 701 045 40	o-ring 32 X 2,0 N		4	
7	997 361 207 03	hub cap		4	
8	997 361 405 00	balance stick-on weight 5.G.		X	
(8)	997 361 410 00	balance stick-on weight 10 G.		X	
(8)	997 361 415 00	balance stick-on weight 15 G.		X	
(8)	997 361 420 00	balance stick-on weight 20 G.		X	
(8)	997 361 425 00	balance stick-on weight 25 G.		X	
(8)	997 361 430 00	balance stick-on weight 30 G.		X	
(8)	997 361 435 00	balance stick-on weight 35 G.		X	
(8)	997 361 440 00	balance stick-on weight 40 G.		X	
(8)	997 361 445 00	balance stick-on weight 45 G.		X	
(8)	997 361 450 00	balance stick-on weight 50 G.		X	

Pos	Part Number	Description	Remark	Qty	Model
(8)	997 361 455 00	balance stick-on weight 55 G.		X	
(8)	997 361 460 00	balance stick-on weight 60 G.		X	
(8)	997 361 465 00	balance stick-on weight 65 G.		X	
(8)	997 361 470 00	balance stick-on weight 70 G.		X	
(8)	997 361 475 00	balance stick-on weight 75 G.		X	
(8)	997 361 480 00	balance stick-on weight 80 G.		X	
(8)	997 361 485 00	balance stick-on weight 85 G.		X	
(8)	997 361 490 00	balance stick-on weight 90 G.		X	
9	900 265 001 50	rubber valve rubber		4	
10	955 361 163 00	cap for rubber valve		4	
11	997 362 191 00	adapter emergency wheel		1	I447
12	997 361 203 01	wheel bolt adapter		5	I447
13	997 362 021 00	emergency wheel		1	I447
14	997 361 189 00	washer		4	
15	P	cone ring		4	
16	997 361 187 00	circlip 2,0		4	

Pos	Part Number	Description	Remark	Qty	Model

Model	Year	MG	SG	Illustration	Restrictions	UPD	20:15	06.02.2010	PORSCHE	PET	PORSCHE
997T2	2010	6	01	601-05		248	USA / CANADA				

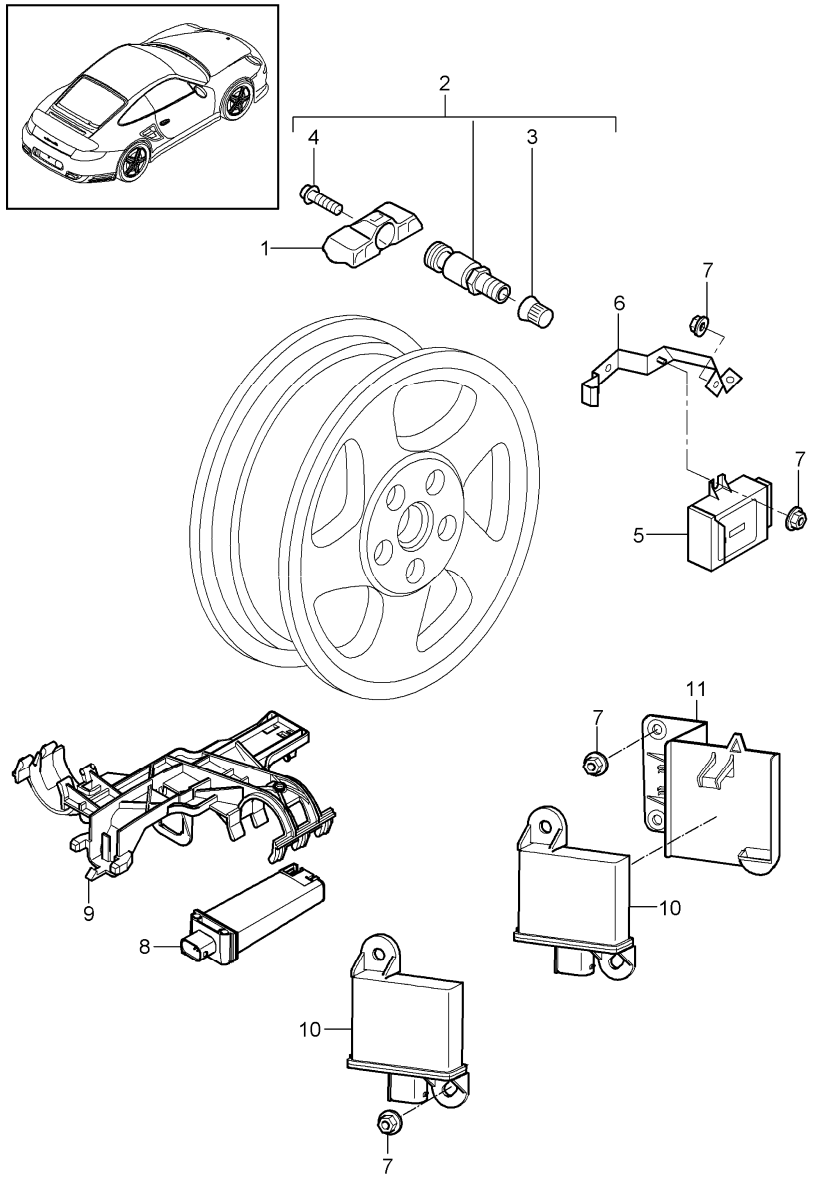

Pos	Part Number	Description	Remark	Qty	Model
		tyre pressure monitoring			I482/483
1	997 606 021 20	sensor tyre pressure monitoring use also: 955.361.053.00		4	I482
2	955 361 053 00	valve aluminium		4	
3	N 908 729 01	cap		4	
4	4D0 601 365	fastening screw		4	
5	997 618 191 02	control unit		1	
6	997 618 203 02	support control unit		1	
7	999 076 081 40	plastic nut T5 16 X 11, 2		8	
8	955 606 101 00	antenna 433 MHZ		1	I482
9	997 606 259 00	support antenna		1	
10	7PP 907 283	transmitter		4	
11	997 606 242 00	support front	/R	1	
(11)	997 606 241 00	support front	/L	1	
-	997 652 057 00	compressor for emergency wheel		1	

Model	Year	MG	SG	Illustration	Restrictions	UPD	20:15	06.02.2010
997T2	2010	6	02	602-00		248	USA / CANADA	

PORSCHE PET PORSCHE

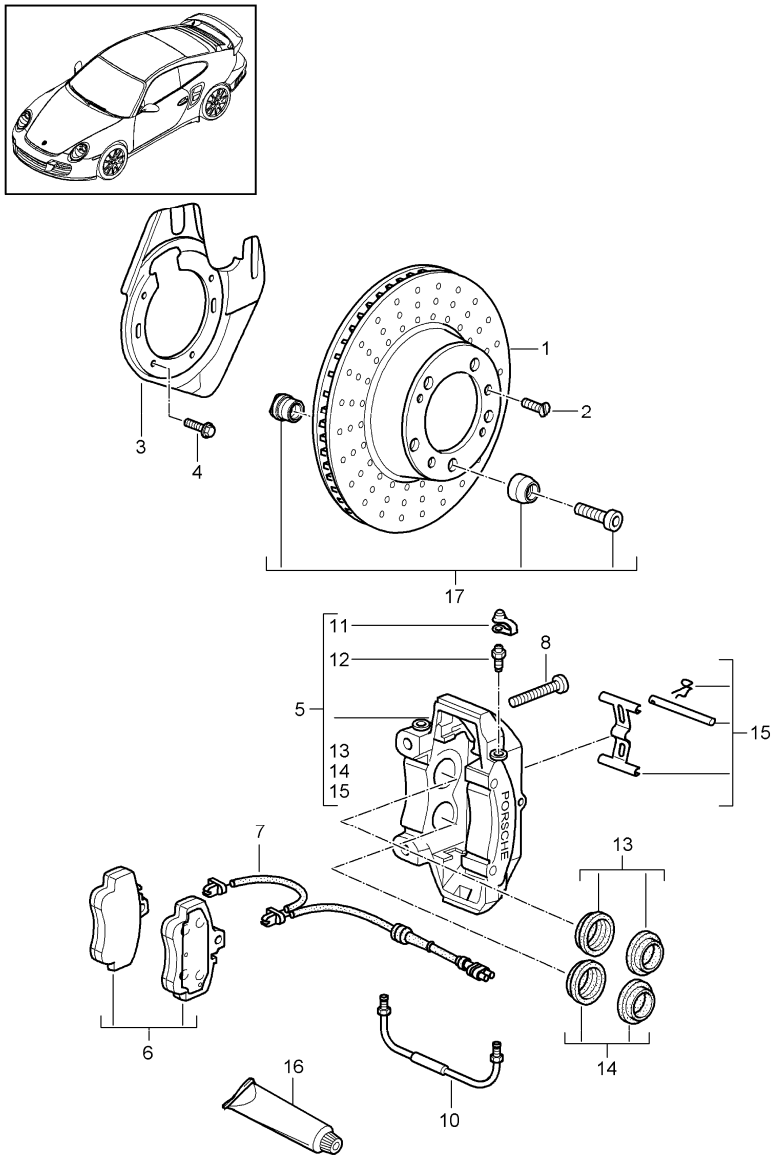

Pos	Part Number	Description	Remark	Qty	Model
		disc brake front axle			
		brake disc only in pairs replace technical manual attention			I450
1	997 351 405 01	brake disc	/L	1	
(1)	997 351 405 02	brake disc only together with with grey cast iron brake use also: 997.341.901.00 see technical manual group 46 50 19	/L	1 X	I422
1	997 351 031 33	brake disc	/L	1	I450
(1)	997 351 031 33	brake disc use also: 997.341.901.00 see technical manual group 46 51 19	/L	1 X	I422/450
(1)	997 351 406 01	brake disc	/R	1	
(1)	997 351 406 02	brake disc only together with with grey cast iron brake use also: 997.341.901.00 see technical manual group 46 50 19	/R	1 X	I422
(1)	997 351 032 33	brake disc	/R	1	I450
(1)	997 351 032 33	brake disc use also: 997.341.901.00 see technical manual grupp 46 51 19	/R	1 X	I422/450
(2)	900 269 047 01	countersunk-head screw M 6 X 12		4	

Pos	Part Number	Description	Remark	Qty	Model
3	997 351 805 05	cover plate	/L	1	
(3)	997 351 806 05	cover plate	/R	1	
4	999 217 116 01	hexagon-head bolt M 6 x 16		X	
5	997 351 431 10	fixed calliper without pad use also: mounting parts fastening screw 999.067.047.09	/L	1 2	
(5)	997 351 427 32	fixed calliper without pad use also: fastening screw 999.067.054.09	/L	1 2	I450
(5)	997 351 432 10	fixed calliper without pad mounting parts fastening screw 999.067.047.09	/R	1 2	
(5)	997 351 428 32	fixed calliper without pad use also: fastening screw 999.067.054.09	/R	1 2	I450
-	997 351 505 02	adapter		2	I450
-	999 073 313 09	round head screw M 12 x 1,5		4	I450
(6)	997 351 947 01	brake pad repair set use also: mounting parts see technical manual group 4 Nr.46 36 20		1	
(6)	997 351 948 02	brake pad repair set use also: mounting parts see technical manual group 4 Nr.46 34 20		1	I450
7	997 612 677 00	warning contact		2	
-	999 507 464 40	support		2	

Pos	Part Number	Description	Remark	Qty	Model
-	944 612 627 00	line bracket for warning contact		3	
(8)	999 067 053 09	pan-head screw M 12 x 1,5 x 85		4	
(8)	999 067 054 09	pan-head screw M 12 X 1,5 X 62		4	I450
(1)	996 351 961 30	connecting line		2	
(10)	980 351 961 00	connecting line		2	I450
11	930 351 927 00	dust boot		2	
12	997 352 919 00	ventilation valve		2	
13	951 352 917 00	repair kit protection caps 28 mm		X	
14	996 351 915 00	repair kit protection caps 32 mm		X	
(13)	996 351 915 01	repair kit protection caps 38 mm		X	
(13)	951 352 917 00	repair kit protection caps 28 mm		X	I450
(13)	996 351 915 00	repair kit protection caps 32 mm		X	I450
(13)	951 351 917 00	repair kit protection caps 36 mm		X	I450
(15)	996 351 959 30	repair kit mounting parts bolt expanding spring screw		1	
16	000 043 117 00	brake cylinder paste 50 G		X	
(16)	000 043 020 00	optimoly 100 G		X	

Pos	Part Number	Description	Remark	Qty	Model
17	997 341 901 00	assembly kit comprising: driving pin sleeve fastening screw see technical manual 46 50 19 46 51 19		2 5 5 5	I422

Pos	Part Number	Description	Remark	Qty	Model

Model	Year	MG	SG	Illustration	Restrictions	UPD	20:16	06.02.2010
997T2	2010	6	03	603-00		248	USA / CANADA	

PORSCHE PET PORSCHE

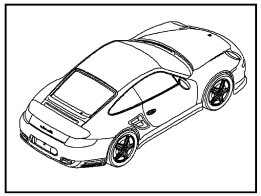

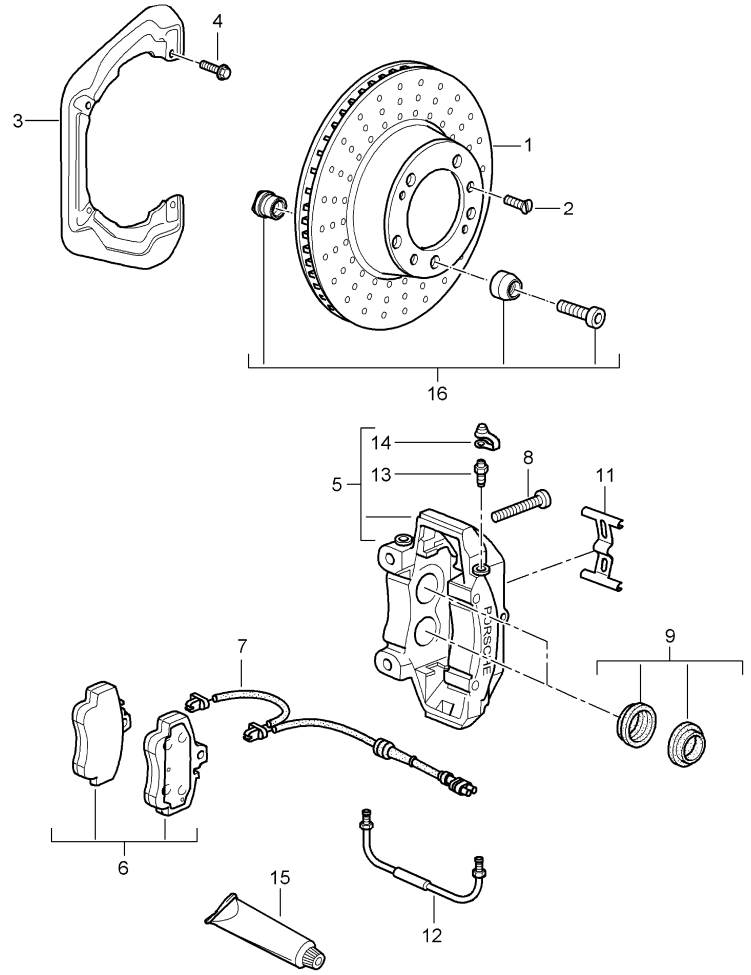

Pos	Part Number	Description	Remark	Qty	Model
		disc brake rear axle			
		brake disc only in pairs replace technical manual attention			I450
1	997 352 405 02	brake disc	/L	1	
(1)	997 352 405 03	brake disc only together with with grey cast iron brake use also: 997.341.901.00 see technical manual 46 53 19	/L	1 X	I422
(1)	997 352 031 01	brake disc	/L	1	I450
(1)	997 352 031 01	brake disc use also: 997.341.901.00 see technical manual 46 54 19	/L	1 X	I422/450
(1)	997 352 406 02	brake disc	/R	1	
(1)	997 352 406 03	brake disc only together with grey cast iron brake use also: 997.341.901.00 see technical manual 46 53 19	/R	1 X	I422
(1)	997 352 032 01	brake disc	/R	1	I450
(1)	997 352 032 01	brake disc use also: 997.341.901.00 see technical manual 46 54 19	/R	1 X	I422/450
(2)	900 269 047 01	countersunk-head screw M 6 X 12		4	
3	996 352 801 03	cover plate		2	
(3)	997 352 801 02	cover plate	/L	1	I450
(3)	997 352 802 02	cover plate	/R	1	I450

Pos	Part Number	Description	Remark	Qty	Model
4	999 217 116 01	hexagon-head bolt M 6 x 16		X	
5	997 352 425 12	fixed calliper without pad use also: mounting parts fastening screw 999.067.040.01	/L	1 2	
(5)	997 352 425 32	fixed calliper without pad use also: mounting parts fastening screw 999.067.040.01	/L	1 2	I450
(5)	997 352 426 12	fixed calliper without pad use also: mounting parts fastening screw 999.067.040.01	/R	1 2	
(5)	997 352 426 32	fixed calliper without pad use also: mounting parts fastening screw 999.067.040.01	/R	1 2	I450
(6)	997 352 949 01	brake pad repair set use also: mounting parts fastening screw 999.067.040.01		1 4	
(6)	997 352 947 02	brake pad repair set use also: mounting parts fastening screw 999.067.040.01 see technical manual group 4 Nr.463520		1 4	I450
-	997 352 086 02	damping plate 34 mm only together with grey cast iron brake		4	
7	997 612 754 00	warning contact		2	
8	999 067 040 01	pan-head screw M 12 X 1,5 X 95		4	
9	965 352 917 00	repair kit protection caps 34 MM		X 2	
11	997 352 959 10	spring		2	
12	997 352 961 00	connecting line	/L	2	
(12)	997 352 962 00	connecting line	/R	2	
13	930 351 919 01	ventilation valve		4	
14	930 351 927 00	dust boot		4	
15	000 043 117 00	brake cylinder paste 50 G		X	
(15)	000 043 020 00	optimoly 100 G		X	
16	997 341 901 00	assembly kit comprising: driving pin sleeve fastening screw see technical manual 46 53 19 46 54 19		2 5 5 5	I422

Model	Year	MG	SG	Illustration	Restrictions	UPD	20:16	06.02.2010
997T2	2010	6	03	603-05		248	USA / CANADA	

PORSCHE PET PORSCHE

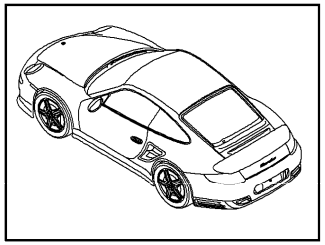

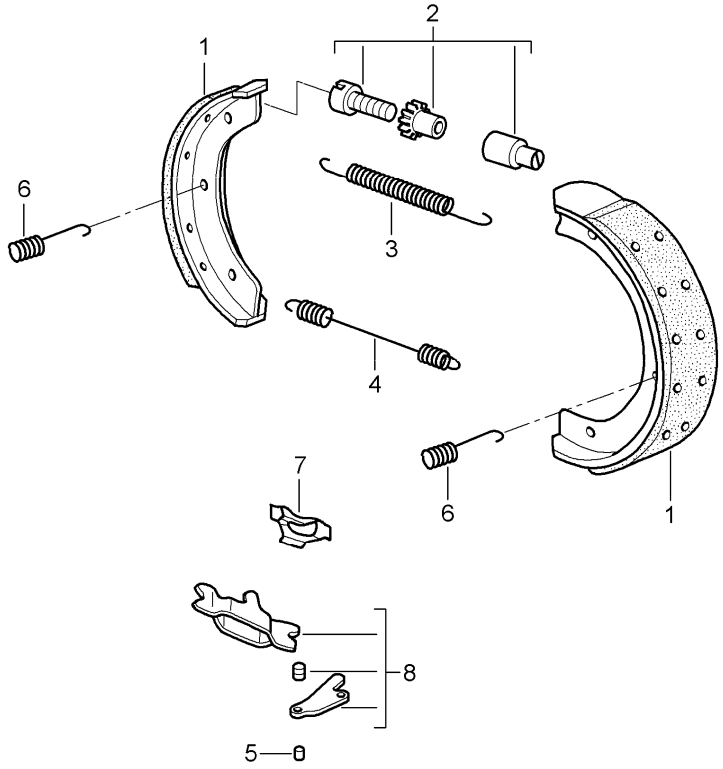

Pos	Part Number	Description	Remark	Qty	Model
		handbrake			
1	997 352 993 02	repair kit 1 set		1	
2	993 352 071 00	adjusting screw		2	
3	997 352 721 01	tension spring short		2	
4	997 352 723 02	tension spring long		2	
5	993 352 737 00	bolt		2	
6	997 352 741 02	compression spring		4	
7	997 352 807 00	support panel		2	
8	928 352 090 01	push-button lock complete		2	

Model	Year	MG	SG	Illustration	Restrictions	UPD	20:16	06.02.2010
997T2	2010	6	04	604-00		248	USA / CANADA	

PORSCHE PET PORSCHE

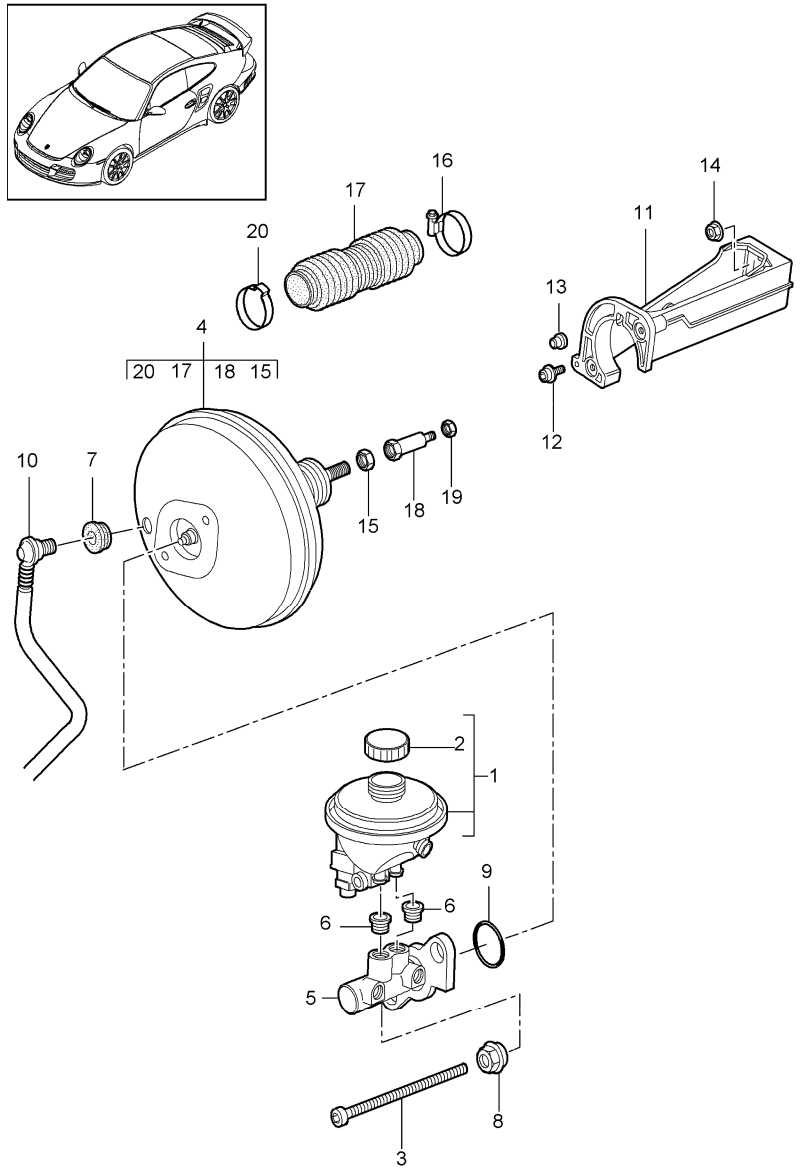

Pos	Part Number	Description	Remark	Qty	Model
		brake master cylinder brake booster			
-	000 043 203 66	brake fluid DOT 4 1 Ltr.		X	
1	997 355 013 21	expansion tank		1	
2	996 355 119 01	catch		1	
-	997 355 125 00	support for contact for container		1	
3	999 073 327 09	pan-head screw M 8 X 197 X 29		2	
4	997 355 925 37	brake booster		1	
5	997 355 910 30	brake master cylinder		1	
6	993 355 922 00	grommet		2	
7	999 702 182 40	rubber bush		1	
8	997 355 925 00	hexagon nut		2	
9	993 355 212 00	gasket		1	
10	997 355 577 26	vacuum line	/LL	1	I098
11	997 423 251 00	intermediate piece		1	
12	999 073 189 01	round head screw M 6 X 12		2	
13	999 703 448 50	stopper	/R	1	
14	900 380 005 01	hexagon nut M 8		2	
15	900 183 015 01	hexagon nut M 12 X 1,5		1	
16	999 512 478 00	hose clamp		1	
17	997 355 969 00	bellows		1	
18	996 355 927 01	connecting piece		1	
19	900 380 015 01	hexagon nut M 6		1	
20	999 512 672 00	clamp		1	

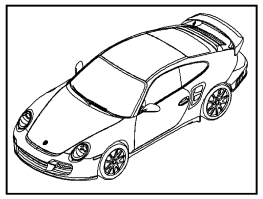

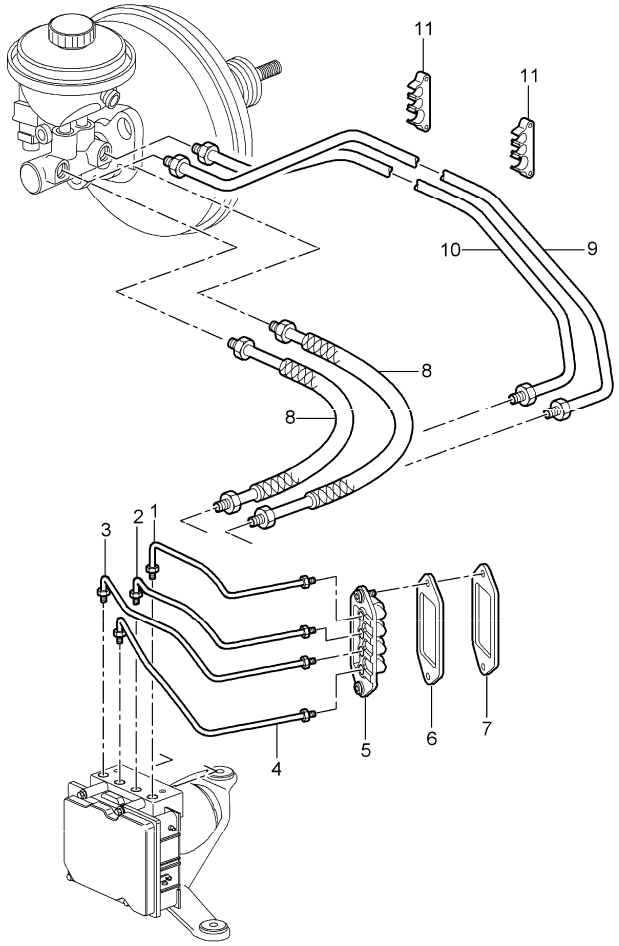

Pos	Part Number	Description	Remark	Qty	Model
		brake lines body front section			
1	997 355 315 30	brake line	/LL	1	I098
2	997 355 316 30	brake line	/LL	1	I098
3	997 355 327 30	brake line	/LL	1	I098
4	997 355 326 30	brake line	/LL	1	I098
5	997 355 650 00	intermediate piece		1	
6	997 355 752 00	gasket		1	
7	997 355 753 00	reinforcement		1	
8	997 355 311 10	pressure line	/LL	1	I098

Model	Year	MG	SG	Illustration	Restrictions	UPD	20:17	06.02.2010	PORSCHE	PET	PORSCHE
997T2	2010	6	04	604-10		248	USA / CANADA				

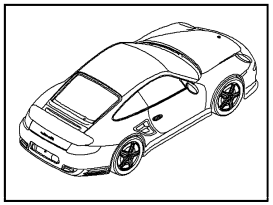

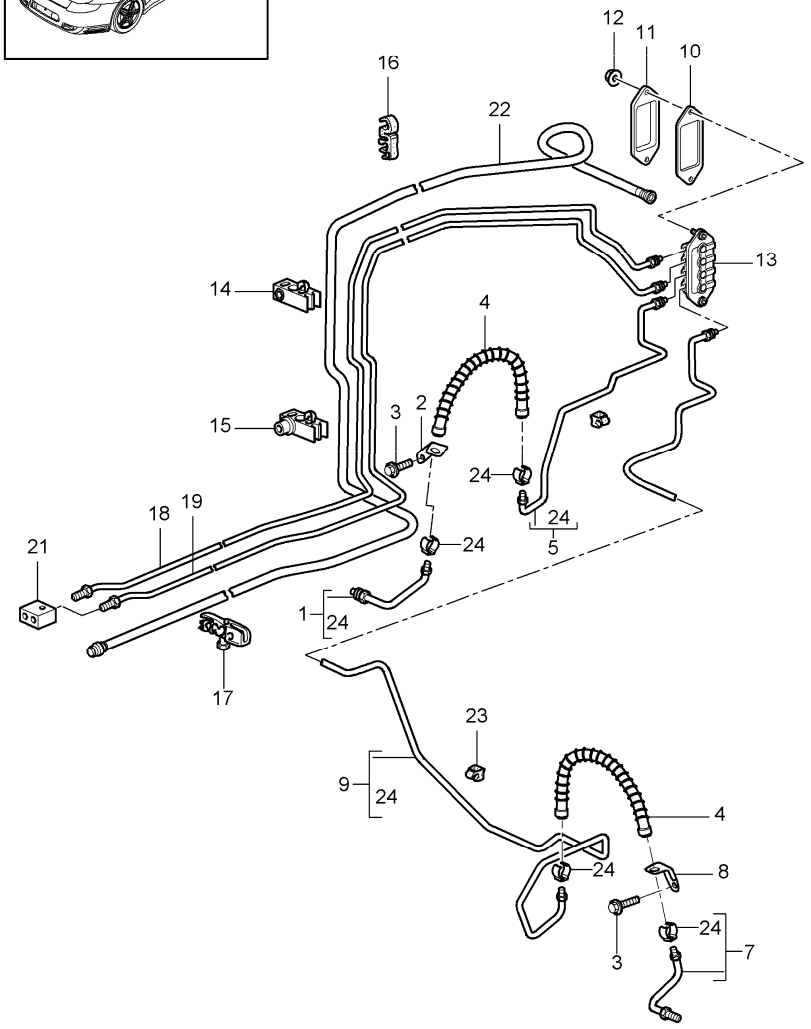

Pos	Part Number	Description	Remark	Qty	Model
		brake lines brake lines underbody vacuum line			
1	997 355 587 03	brake line	/L	1	
(1)	997 355 587 11	brake line	/L	1	I450
2	996 355 507 05	brake hose bracket	/L	1	
3	900 067 117 04	pan-head screw M 6 x 16		4	
4	996 355 139 01	brake hose		2	
5	997 355 175 30	brake line	/L	1	
7	997 355 588 03	brake line	/R	1	
(7)	997 355 588 11	brake line	/R	1	I450
8	996 355 508 05	brake hose bracket	/R	1	
9	997 355 176 30	brake line		1	
10	997 355 753 00	reinforcement		1	
11	997 355 752 00	gasket		1	
12	900 380 015 01	hexagon nut M 6		3	
13	997 355 650 00	intermediate piece		1	
14	996 355 545 00	support		3	
15	996 355 549 00	support		1	
16	996 355 547 01	support		2	
17	996 355 543 00	support		1	
18	997 355 177 10	brake line		1	
19	997 355 179 10	brake line		1	
21	996 355 760 31	connecting piece		1	
22	997 355 571 01	vacuum line		1	
-	999 702 289 41	grommet wheel housing		1	
23	999 651 331 40	cable holder		5	

Pos	Part Number	Description	Remark	Qty	Model
24	997 355 331 00	retainer spring for brake line		X	

Model	Year	MG	SG	Illustration	Restrictions	UPD	20:17	06.02.2010
997T2	2010	6	04	604-15		248	USA / CANADA	

PORSCHE PET PORSCHE

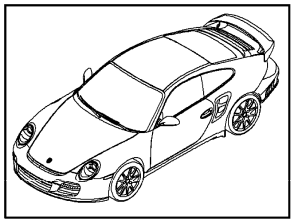

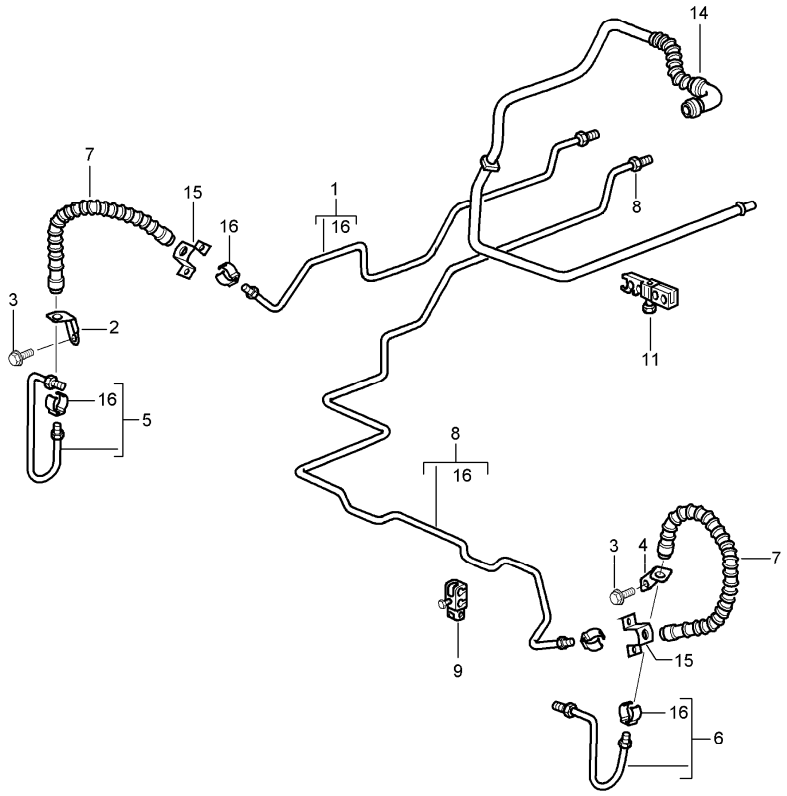

Pos	Part Number	Description	Remark	Qty	Model
		brake line underbody rear axle vacuum line			
1	997 355 189 10	brake line	/L	1	
2	997 355 503 10	support	/L	1	
3	900 067 117 04	pan-head screw M 6 x 16		2	
4	997 355 504 10	support	/R	1	
5	996 355 585 11	brake line	/L	1	
6	996 355 586 11	brake line	/R	1	
7	996 355 139 01	brake hose		2	
8	997 355 190 11	brake line		1	
9	996 347 543 00	cable holder		3	
11	996 355 543 00	support		1	
14	997 355 575 12	vacuum line		1	
-	999 507 495 40	support		1	
15	996 501 815 02	support		2	
	GRV	prime coated			
16	997 355 331 00	retainer spring for brake line		X	

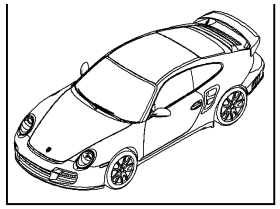

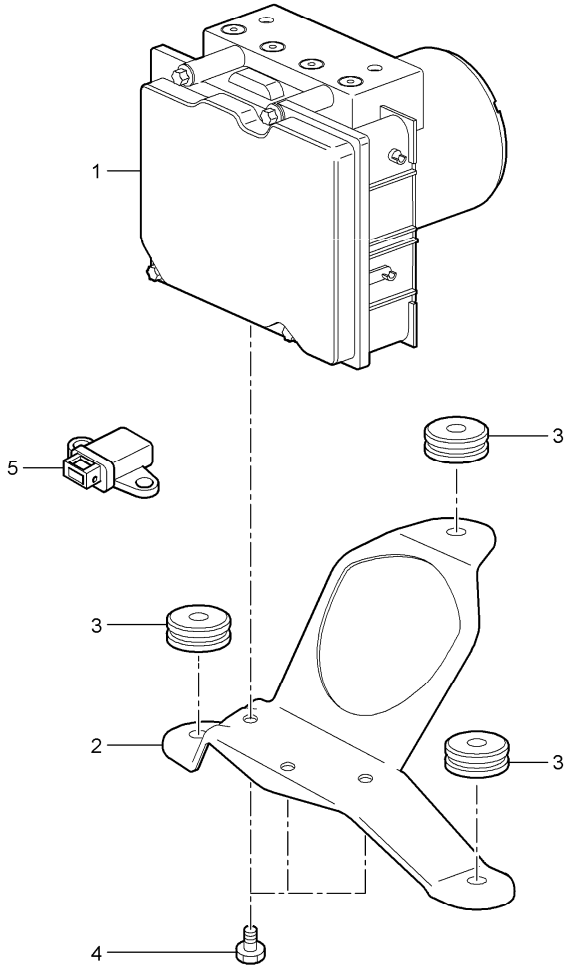

Pos	Part Number	Description	Remark	Qty	Model
		hydraulic unit anti-lock brake system control			
1	997 355 955 63	hydraulic unit		1	
2	997 355 033 25	support with rubber mounting	/LL	1	I098
(2)	997 355 033 00	support with rubber mounting	/RL	1	I099
3	964 356 635 00	rubber mounting		3	
-	999 045 004 40	hexagon nut plastic material		3	
4	900 385 060 01	screw BM 6 X 10		3	
5	997 606 145 05	sensor		1	
-	900 378 035 01	hexagon-head bolt M 6 X 16		2	

Model	Year	MG	SG	Illustration	Restrictions	UPD	20:17	06.02.2010
997T2	2010	7	01	701-00		248	USA / CANADA	

PORSCHE PET PORSCHE

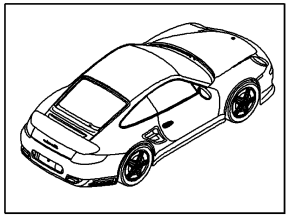

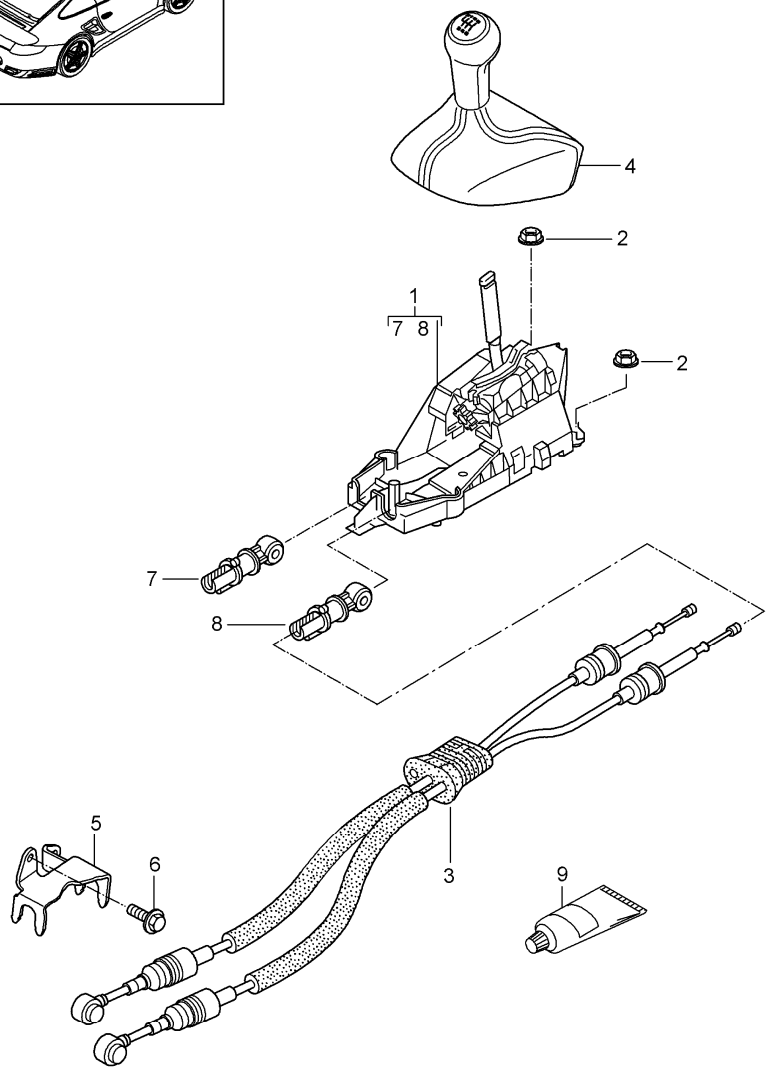

Pos	Part Number	Description	Remark	Qty	Model
		transmission control manual transmission			I480
1	997 424 010 00	gearshift bracket		1	
(1)	997 424 983 00	gearshift bracket		1	IXCZ
2	999 084 629 01	hexagon nut M 6 SB		4	
3	997 424 041 50	cable transmission control		1	
4	997 424 075 50	gearshift knob leather		1	
	FOT	black/black			
	FOU	stone grey/stone grey			
	FOV	sand beige/sand beige			
	FOW	sea blue/sea blue			
	FPW	terracotta/terracotta			
	FPX	cocoa/cocoa			
	FOY	dark grey/dark grey			
	FOZ	brown nat./brown nat.			
	FSR	Carrera Red/Carrera Red			
(4)	997 424 075 54	gearshift knob macassar		1	I801
	FPA	black			
	FPB	stone grey			
	FPC	sand beige			
	FPD	sea blue			
	FPY	terracotta			
	FPZ	cocoa			
	FPF	dark grey/natural			
	FPG	brown/natural			
	FST	carrera red			

Pos	Part Number	Description	Remark	Qty	Model
(4)	997 424 075 53	gearshift knob carbon		1	I803
	FPP	black			
	FPQ	stone grey			
	FPR	sand beige			
	FPS	sea blue			
	FQC	terracotta			
	FQD	cocoa			
	FPU	dark grey/natural			
	FPV	brown/natural			
	FSS	carrera red			
(4)	997 424 981 00	gearshift knob aluminium look leather		1	IX97
	8YR	black			
	5X5	stone grey			
	8G1	sand beige			
	3S8	sea blue			
	9N2	terracotta			
	9Q3	cocoa			
	D11	dark grey/natural			
	T11	brown/natural			
	N11	carrera red			
-	996 424 445 00	clip for fastening part		X	
5	997 424 165 55	bearing bracket		1	
6	999 073 209 09	pan-head screw M 10 x 20		2	
7	996 424 145 01	fastening part for cable adjustable		1	
8	996 424 147 00	fastening part for cable adjustable		1	
9	000 043 205 93	grease 1 100-gramme tube		X	

Model	Year	MG	SG	Illustration	Restrictions	UPD	20:18	06.02.2010
997T2	2010	7	01	701-01		248	USA / CANADA	

PORSCHE PET PORSCHE

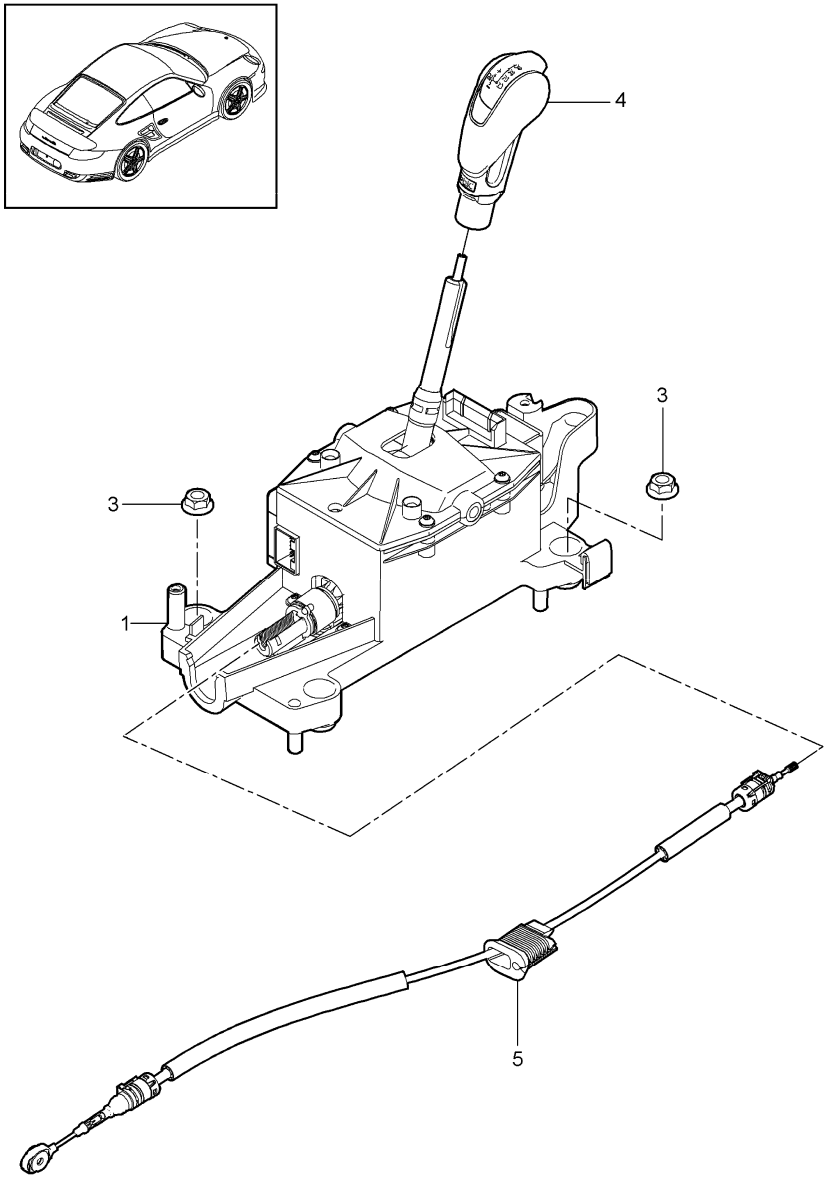

Pos	Part Number	Description	Remark	Qty	Model
		selector lever tiptronic			I250
1	9G1 426 011 05	support with housing		1	
3	999 084 629 01	hexagon nut M 6		4	
4	9G1 426 069 00	selector knob leather volcano grey		1	
	FTE	black			
	FTF	stone grey			
	FTG	sand beige			
	FTH	sea blue			
	FTJ	terracotta			
	FTK	cocoa			
	FTL	dark grey/natural			
	FTM	brown/natural			
	FTN	carrera red			
(4)	9G1 426 069 04	selector knob macassar volcano grey		1	I801
	FTO	black			
	FTP	stone grey			
	FTQ	sand beige			
	FTR	sea blue			
	FTS	terracotta			
	FTT	cocoa			
	FTU	dark grey/natural			
	FTV	brown/natural			
	FTW	carrera red			
(4)	9G1 426 069 14	selector knob macassar volcano grey		1	I801

Pos	Part Number	Description	Remark	Qty	Model
	FTO	black			
	FTP	stone grey			
	FTQ	sand beige			
	FTR	sea blue			
	FTS	terracotta			
	FTT	cocoa			
	FTU	dark grey/natural			
	FTV	brown/natural			
	FTW	carrera red			
(4)	9G1 426 069 03	selector knob leather carbon volcano grey		1	I803
	FTX	black			
	FTY	stone grey			
	FTZ	sand beige			
	FUA	sea blue			
	FUB	terracotta			
	FUC	cocoa			
	FUD	dark grey/natural			
	FUE	brown/natural			
	FUF	carrera red			
(4)	9G1 426 069 13	selector knob leather carbon volcano grey		1	I803
	FTX	black			
	FTY	stone grey			
	FTZ	sand beige			
	FUA	sea blue			
	FUB	terracotta			
	FUC	cocoa			

Pos	Part Number	Description	Remark	Qty	Model
	FUD	dark grey/natural			
	FUE	brown/natural			
	FUF	carrera red			
(4)	9G1 426 980 00	selector knob		1	IXYA
	D11	dark grey/natural			
	N11	carrera red			
	T11	brown/natural			
	3S8	sea blue			
	5X5	stone grey			
	8G1	sand beige			
	FTE	black			
	9N2	terracotta			
	9Q3	cocoa			
5	9G1 426 033 00	cable		1	

Model	Year	MG	SG	Illustration	Restrictions	UPD	20:18	06.02.2010
997T2	2010	7	01	701-05		248	USA / CANADA	

PORSCHE PET PORSCHE

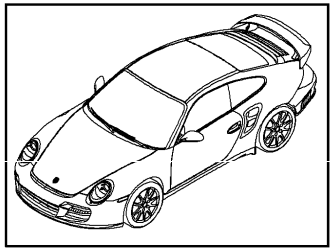

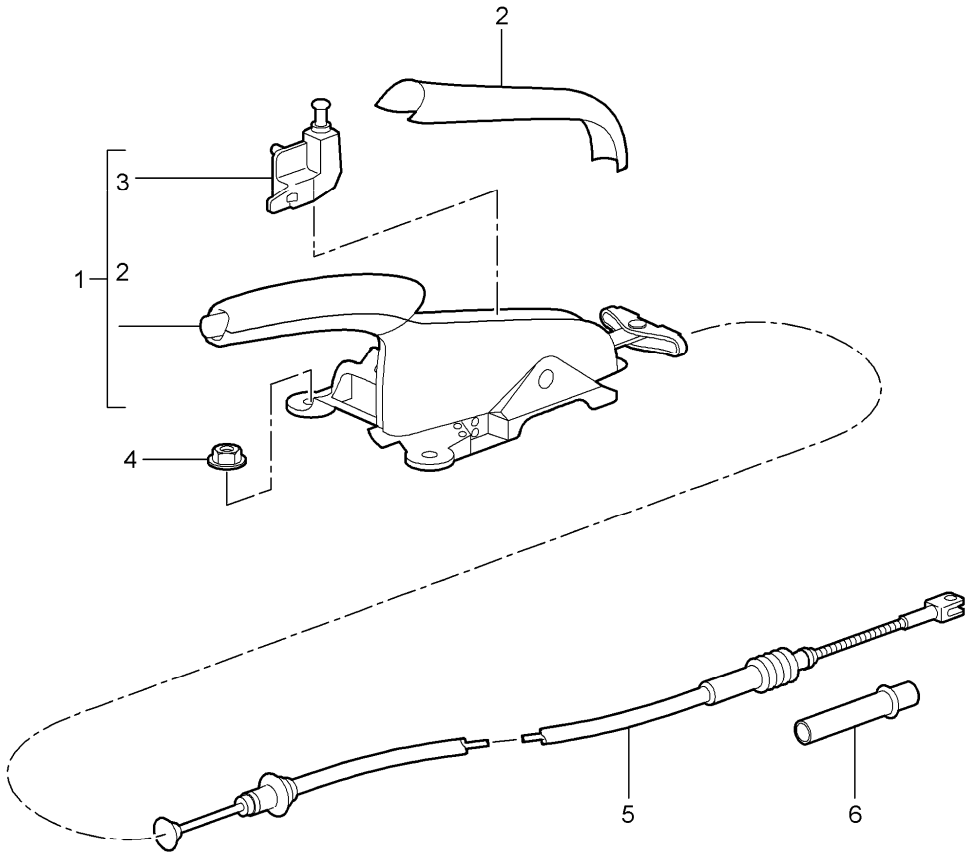

Pos	Part Number	Description	Remark	Qty	Model
		handbrake actuator			
(1)	997 424 031 62	parking-brake lever complete leather		1	
	8YR	black			
	5X5	stone grey			
	8G1	sand beige			
	3S8	sea blue			
	9N2	terracotta			
	9Q3	cocoa			
	D11	dark grey/natural			
	T11	brown/natural			
	N11	carrera red			
(1)	997 424 031 63	parking-brake lever complete macassar		1	I801
	8YR	black			
	5X5	stone grey			
	8G1	sand beige			
	3S8	sea blue			
	9N2	terracotta			
	9Q3	cocoa			
	D11	dark grey/natural			
	T11	brown/natural			
	N11	carrera red			
(1)	997 424 031 65	parking-brake lever complete carbon		1	I803
	8YR	black			
	5X5	stone grey			
	8G1	sand beige			

Pos	Part Number	Description	Remark	Qty	Model
	3S8	sea blue			
	9N2	terracotta			
	9Q3	cocoa			
	D11	dark grey/natural			
	T11	brown/natural			
	N11	carrera red			
(1)	997 424 980 00	parking-brake lever complete	/LL	1	IX98/098
	8YR	black			
	5X5	stone grey			
	8G1	sand beige			
	3S8	sea blue			
	9N2	terracotta			
	9Q3	cocoa			
	D11	dark grey/natural			
	T11	brown/natural			
	N11	carrera red			
2	997 424 155 00	cover leather		1	
	8YR	black			
	5X5	stone grey			
	8G1	sand beige			
	3S8	sea blue			
	9N2	terracotta			
	9Q3	cocoa			
	D11	dark grey/natural			
	T11	brown/natural			
	N11	carrera red			
3	996 613 112 01	switch		1	
4	999 084 630 09	hexagon nut M 8		4	
5	997 424 141 06	parking-brake cable		2	
6	996 424 721 02	guide tube		2	

Model	Year	MG	SG	Illustration	Restrictions	UPD	20:18	06.02.2010
997T2	2010	7	02	702-00		248	USA / CANADA	

PORSCHE PET PORSCHE

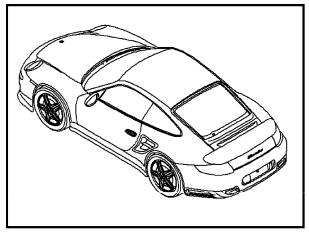

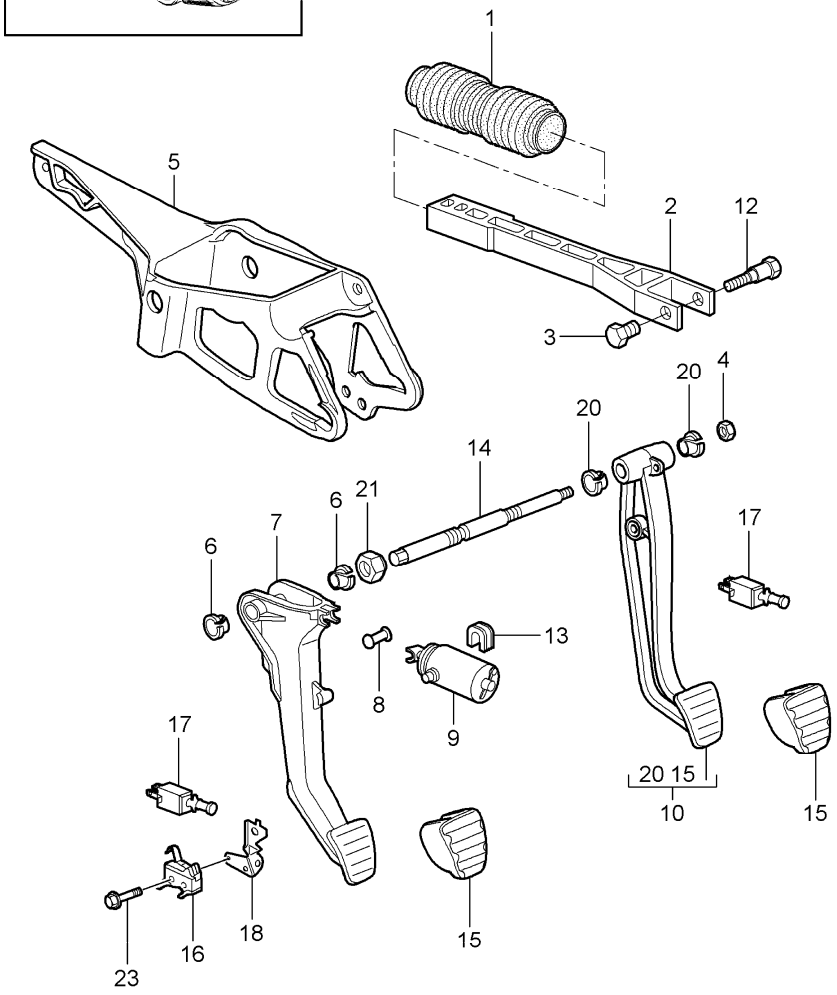

Pos	Part Number	Description	Remark	Qty	Model
		pedals			
-	000 043 206 17	grease 1 tube		X	
1		bellows see illustrations 6/04/00			
2	996 423 165 05	push rod		1	
3	996 423 307 00	sleeve		1	
4	999 084 457 01	hexagon nut M 8		3	
5	997 423 571 02	bracket for clutch power spring		1	I480
6	997 423 399 01	bush		2	I480
7	997 423 139 01	clutch pedal		1	I480
8	996 423 315 06	bolt		1	I480
-	999 166 022 01	kl-lock for bolt		1	I480
9	997 423 081 52	clutch power spring		1	
10	997 423 091 04	brake pedal	/LL	1	I098/480
(10)	997 423 093 04	brake pedal	/LL	1	I098/250
12	996 423 308 00	bolt		1	
13	997 423 581 00	bearing shell		1	
14	997 423 281 00	axle	/LL	1	I098/480
(14)	996 423 283 05	axle	/LL	1	I098/250
15	997 423 910 00	pedal cap		2	I480
(15)	997 423 912 00	pedal cap		1	I250
16	997 613 109 01	switch		1	I480
17	996 613 113 02	switch brake pedal		2	

Pos	Part Number	Description	Remark	Qty	Model
(17)	996 613 114 01	switch clutch pedal		1	
18	997 423 541 00	support		1	
20	997 423 401 00	bush	/LL	2	I098
21	997 423 275 01	screw plug		1	
22	900 378 273 01	hexagon-head bolt M 6 x 18		1	
23	900 146 159 02	round head screw M 3 X 20		1	
24	997 423 695 00	rubber stop		1	
25	997 423 697 00	rubber stop		1	

Model	Year	MG	SG	Illustration	Restrictions	UPD	20:18	06.02.2010	PORSCHE	PET	PORSCHE
997T2	2010	7	02	702-08		248	USA / CANADA				

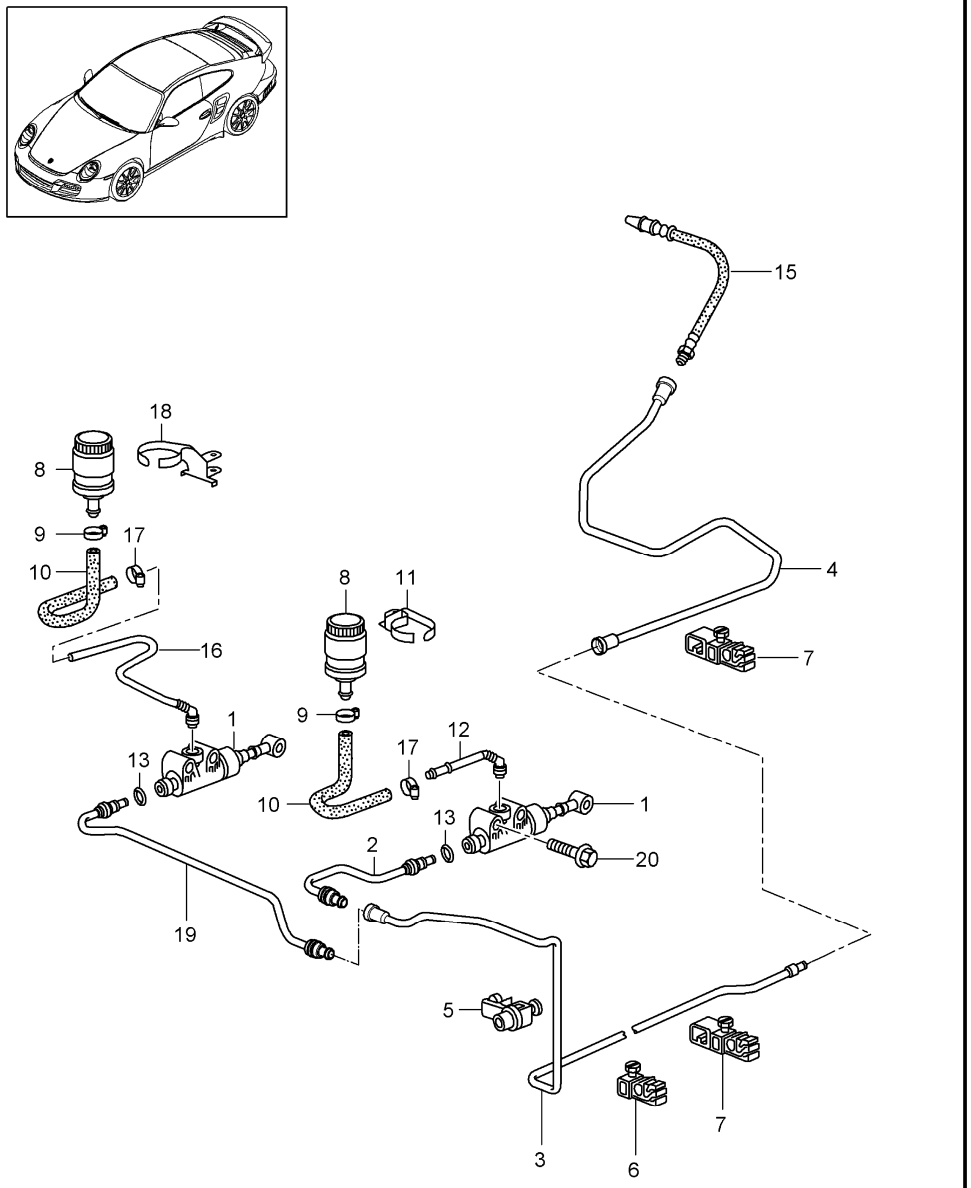

Pos	Part Number	Description	Remark	Qty	Model
		clutch actuation clutch master cylinder clutch pipeline			
1	997 423 171 50	clutch master cylinder		1	
-	996 423 614 00	circlip pressure line		1	
-	996 423 315 06	bolt		1	
-	999 166 022 01	kl-lock for bolt		1	
2	997 423 107 60	clutch pipeline	/LL	1	I098
3	997 423 109 60	clutch pipeline		1	
4	997 423 113 60	clutch pipeline		1	
5	996 355 549 00	support		1	
6	996 355 545 00	support		2	
7	996 355 543 00	support		4	
8	993 423 417 00	container		1	
9	999 512 650 09	hose clamp		1	
10	997 423 343 51	moulded hose	/LL	1	I098
11	997 423 245 50	support	/LL	1	I098
12	997 423 147 50	feed line	/LL	1	I098
13	997 423 913 00	repair kit comprising: o-ring sealing rubber		X 1 1	
-	999 591 964 40	support clutch hose		X	
15	9A1 423 377 50	clutch hose		1	
17	999 512 650 09	hose clamp		1	
20	900 378 029 09	hexagon-head bolt M 6X 40		2	
-	000 043 203 33	pentosin 1000 ML		X	

Model	Year	MG	SG	Illustration	Restrictions	UPD	20:18	06.02.2010
997T2	2010	7	02	702-09		248	USA / CANADA	

PORSCHE PET PORSCHE

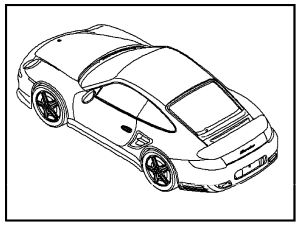

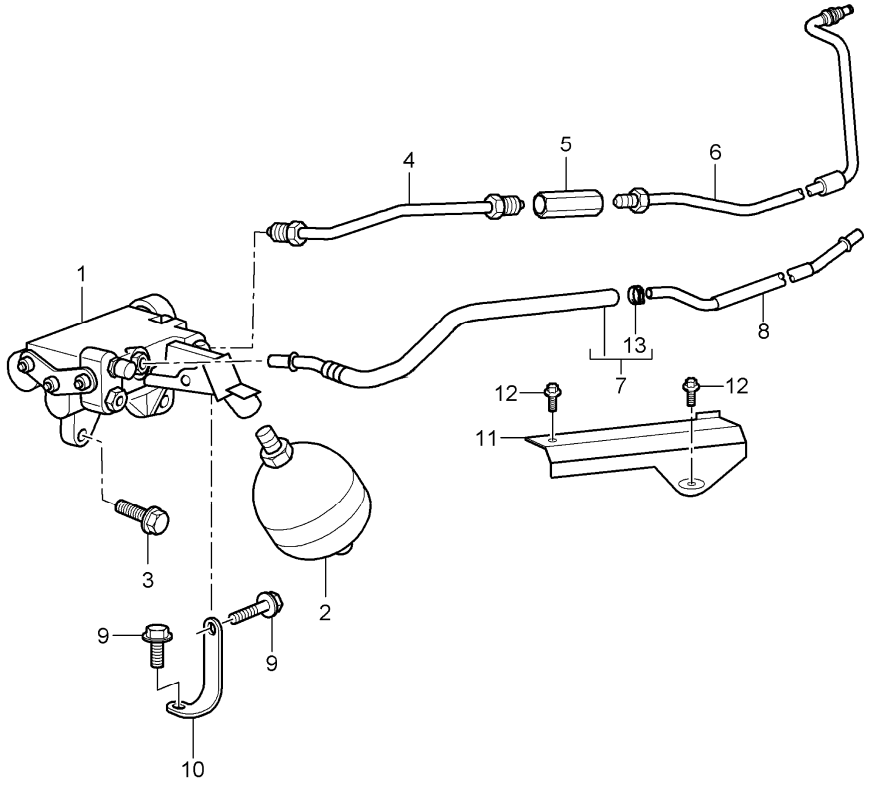

Pos	Part Number	Description	Remark	Qty	Model
		clutch actuation clutch pipeline pressure accumulator clutch operating cylinder			I480
1	996 116 237 52	clutch operating cylinder		1	
-	999 507 745 09	cable clamp 13,5		1	
2	997 314 166 00	pressure accumulator		1	
-	999 707 529 40	sealing ring for pressure accumulator		1	
3	900 075 222 09	combination screw M 8 X 30		2	
4	9A1 314 288 02	pressure line		1	
5	999 136 041 30	threaded joint		1	
6	9A1 314 282 03	pressure line		1	
7	9A1 314 283 01	return line		1	
8	9A1 314 280 03	return line		1	
9	900 378 017 01	hexagon-head bolt M 8 x 20		2	
10	997 116 201 55	support		1	
11	9A1 314 312 01	support		1	
-	999 651 122 01	cable clamp 7.00/11,00		2	
12	900 385 009 01	torx screw M 6 X 16		2	
13	999 512 775 01	hose clamp		1	
-	000 043 203 33	pentosin 1000 ML		X	

Model	Year	MG	SG	Illustration	Restrictions	UPD	20:19	06.02.2010
997T2	2010	7	02	702-10		248	USA / CANADA	

PORSCHE PET PORSCHE

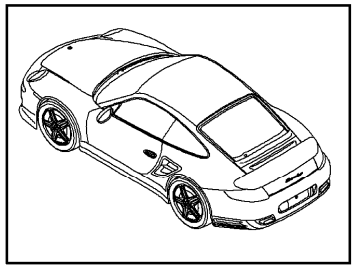

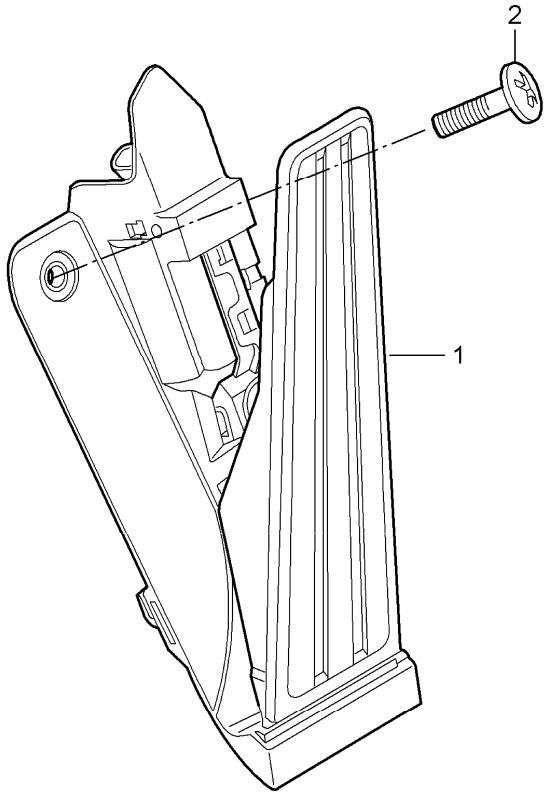

Pos	Part Number	Description	Remark	Qty	Model
		pedals accelerator control			
1	997 423 019 02	accelerator control		1	I480
(1)	997 423 021 02	accelerator control		1	I250
2	900 146 161 09	round head screw M 6 X 20		1	

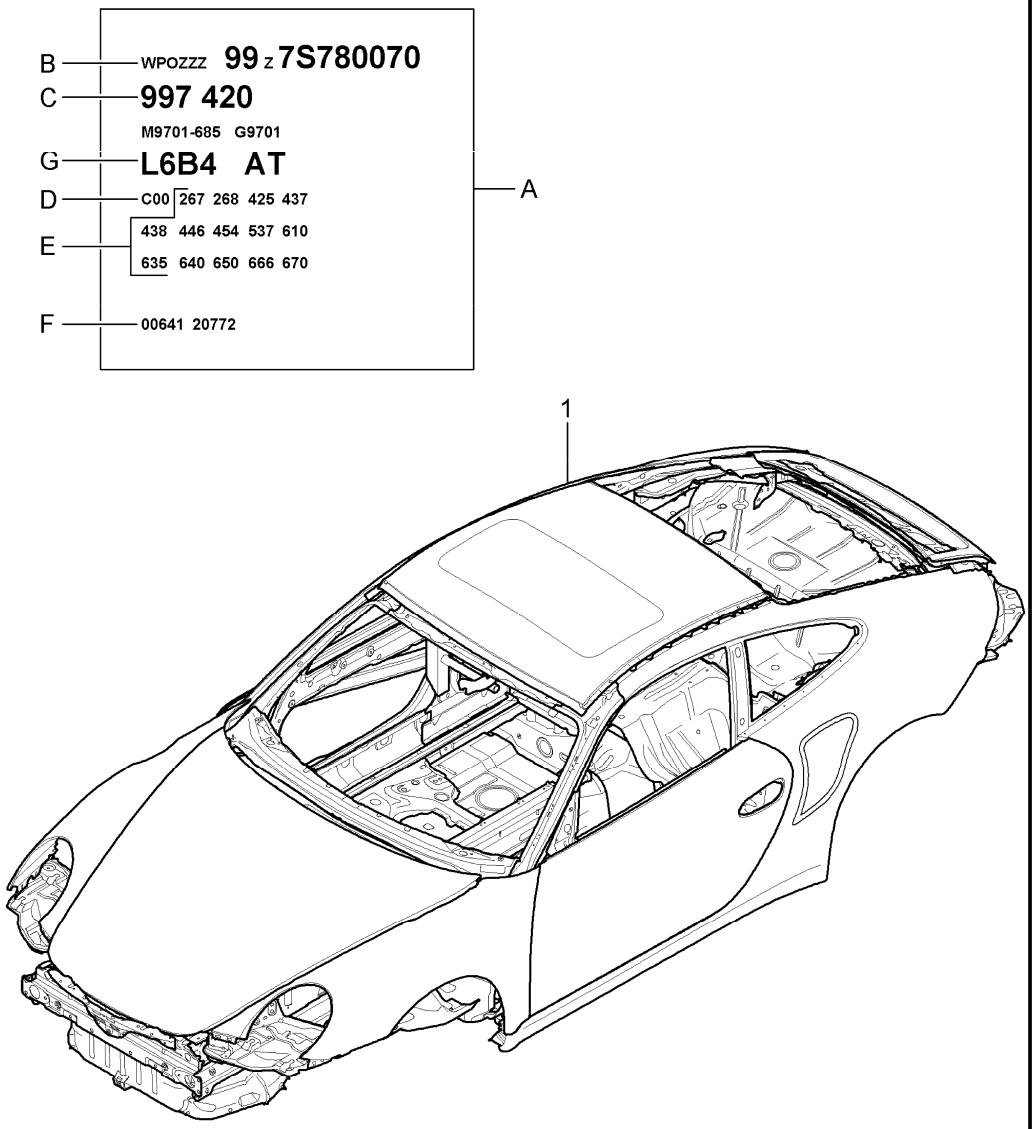

Pos	Part Number	Description	Remark	Qty	Model
		body in white			
		prime coated sealed with underbody protection with doors/lids/wings			
		bodyshells can only only available from current model year available			
		the data required for your order can be found on the vehicle data carrier in on-board folder please indicate this data in your order			
A	-	vehicle data carrier			
B	-	vehicle identification no.			
C	-	order type			
D	-	country equipment			
E	-	optional extras			
F	-	additional applications			
G	-	indicate colour			
1	997 500 900 00	body in white		1	
	GRV	prime coated			

Model	Year	MG	SG	Illustration	Restrictions	UPD	20:19	06.02.2010
997T2	2010	8	01	801-02		248	USA / CANADA	

Pos	Part Number	Description	Remark	Qty	Model
		stopper plane see workshop manual			
1	999 703 462 40	lid 10 x 6,5		X	
2	999 703 421 40	grommet 15 mm		X	
3	999 703 318 40	lid 20 x 28		X	
4	803 803 583 A	lid 20 x 30		X	
5	999 703 420 40	stopper 20,3 x 30 x 11		X	
6	803 803 583	rubber sleeve 30 x 40		X	
7	999 703 433 40	stopper 30 x 42		X	
8	999 703 454 40	lid 55 x 70		X	

Model	Year	MG	SG	Illustration	Restrictions	UPD	20:19	06.02.2010
997T2	2010	8	01	801-05		248	USA / CANADA	

PORSCHE PET PORSCHE

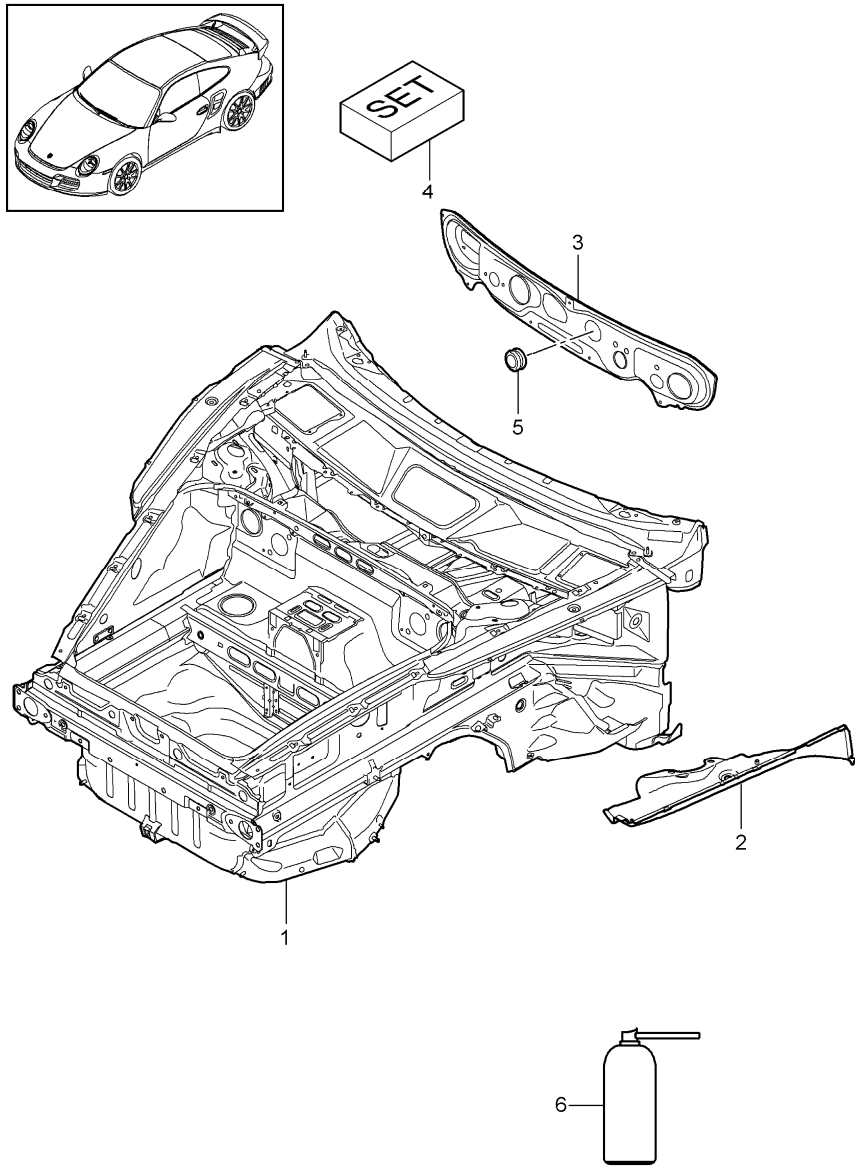

Pos	Part Number	Description	Remark	Qty	Model
		body front section			
1	997 501 911 01	body front section	/LL	1	I098
	GRV	prime coated use also: sealing compound Pos. 5 processing instructions see technical manual			
		use also:			
2	997 501 945 00	lower part	/L	1	
	GRV	prime coated			
(2)	997 501 946 01	lower part	/R	1	
	GRV	prime coated			
3	997 504 121 00	lid	/LL	1	I098
4	000 043 300 94	adhesive set		1	
5	999 702 255 41	lid 61,5 X 72,6		1	
6	999 915 337 40	sealing compound		1	

Model	Year	MG	SG	Illustration	Restrictions	UPD	20:19	06.02.2010	PORSCHE	PET	PORSCHE
997T2	2010	8	01	801-10		248	USA / CANADA				

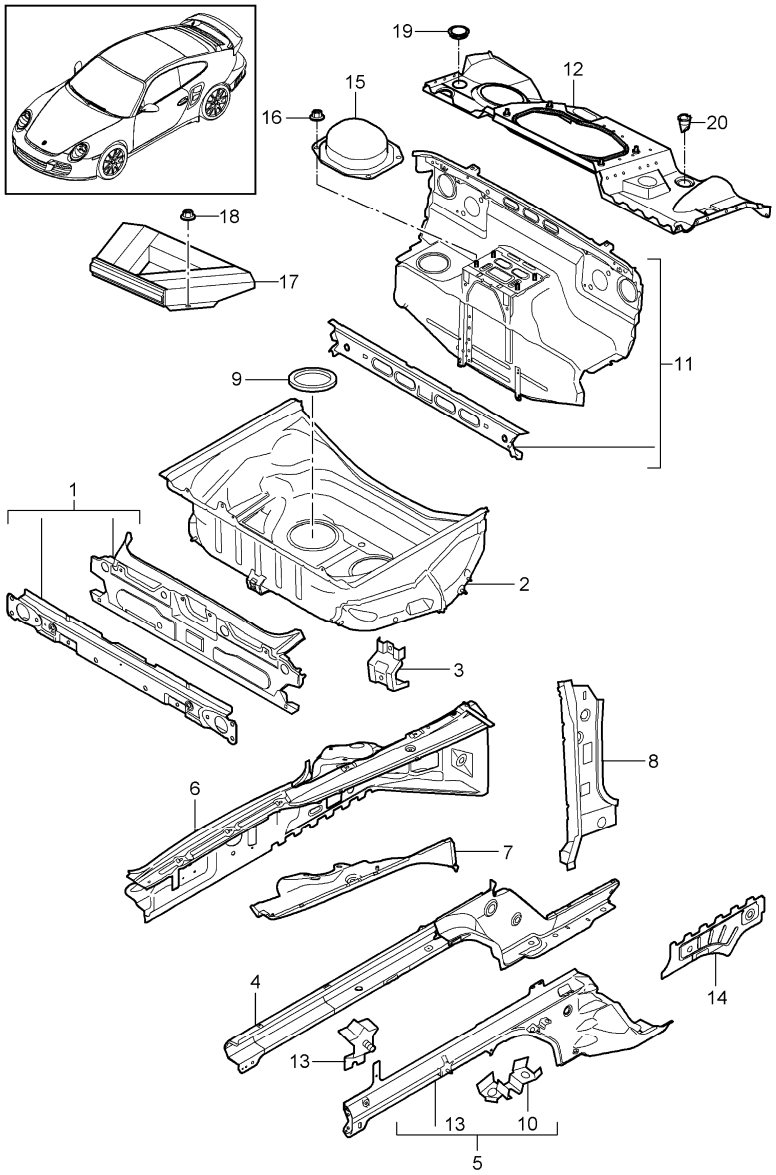

Pos	Part Number	Description	Remark	Qty	Model
		body front section single parts			
1	997 501 931 00	terminal piece		1	
	GRV	prime coated			
2	997 501 979 01	spare-wheel well	/LL	1	I098
	GRV	prime coated			
3	996 501 621 00	support		3	
	GRV	prime coated			
4	997 501 305 01	side member	/L	1	
	GRV	prime coated			
(4)	997 501 306 01	side member	/R	1	
	GRV	prime coated			
5	997 501 915 01	side member	/L	1	
	GRV	prime coated			
(5)	997 501 916 01	side member	/R	1	
	GRV	prime coated			
6	997 501 935 01	wheel housing	/L	1	
	GRV	prime coated			
(6)	997 501 936 01	wheel housing	/R	1	
	GRV	prime coated			
7	997 501 945 00	lower part	/L	1	
	GRV	prime coated			
(7)	997 501 946 01	lower part	/R	1	
	GRV	prime coated			
8	997 501 937 00	hinge pillar	/L	1	
	GRV	prime coated			
(8)	997 501 938 00	hinge pillar	/R	1	
	GRV	prime coated			
9	996 504 201 01	lid $ 145 MM		2	

Pos	Part Number	Description	Remark	Qty	Model
10	996 501 815 02	support		2	
	GRV	prime coated			
11	997 502 915 00	bulkhead	/LL	1	I098
	GRV	prime coated			
12	997 502 017 00	cross panel		1	
	GRV	prime coated			
13	996 501 341 00	support		2	
	GRV	prime coated			
14	997 501 665 01	separator	/L	1	
	GRV	prime coated			
(14)	997 501 666 01	separator	/R	1	
	GRV	prime coated			
15	997 504 471 00	lid bulkhead		1	
16	900 380 015 09	hexagon nut M6		7	
17	997 504 403 00	insert spare-wheel well		1	
18	999 084 638 09	hexagon nut M 6		3	
19	803 803 583	rubber sleeve 30,0 X 40,0		1	
20	999 703 476 40	grommet 29,8 X 1,0		4	

Pos	Part Number	Description	Remark	Qty	Model

Model	Year	MG	SG	Illustration	Restrictions	UPD	20:20	06.02.2010
997T2	2010	8	01	801-15		248	USA / CANADA	

PORSCHE PET PORSCHE

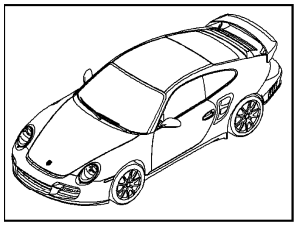

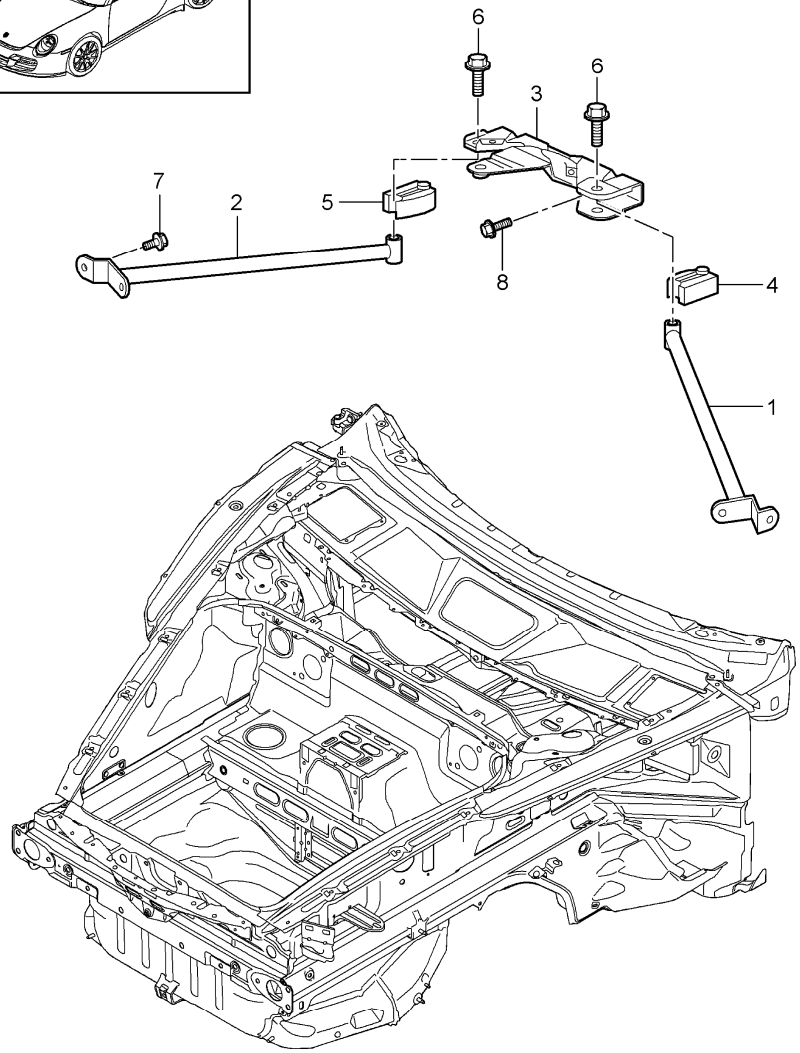

Pos	Part Number	Description	Remark	Qty	Model
		dome strut			
1	996 504 233 01	dome strut	/L	1	
2	996 504 234 01	dome strut	/R	1	
3	997 504 359 00	bracket		1	
4	996 504 633 00	filler piece	/L	1	
5	996 504 634 00	filler piece	/R	1	
6	900 378 100 01	hexagon-head bolt AM 10 X 45		2	
7	900 075 010 09	hexagon-head bolt M 6 X 12		4	
8	900 378 173 01	hexagon-head bolt M 6 X 20		4	

Model	Year	MG	SG	Illustration	Restrictions	UPD	20:20	06.02.2010
997T2	2010	8	01	801-20		248	USA / CANADA	

PORSCHE PET PORSCHE

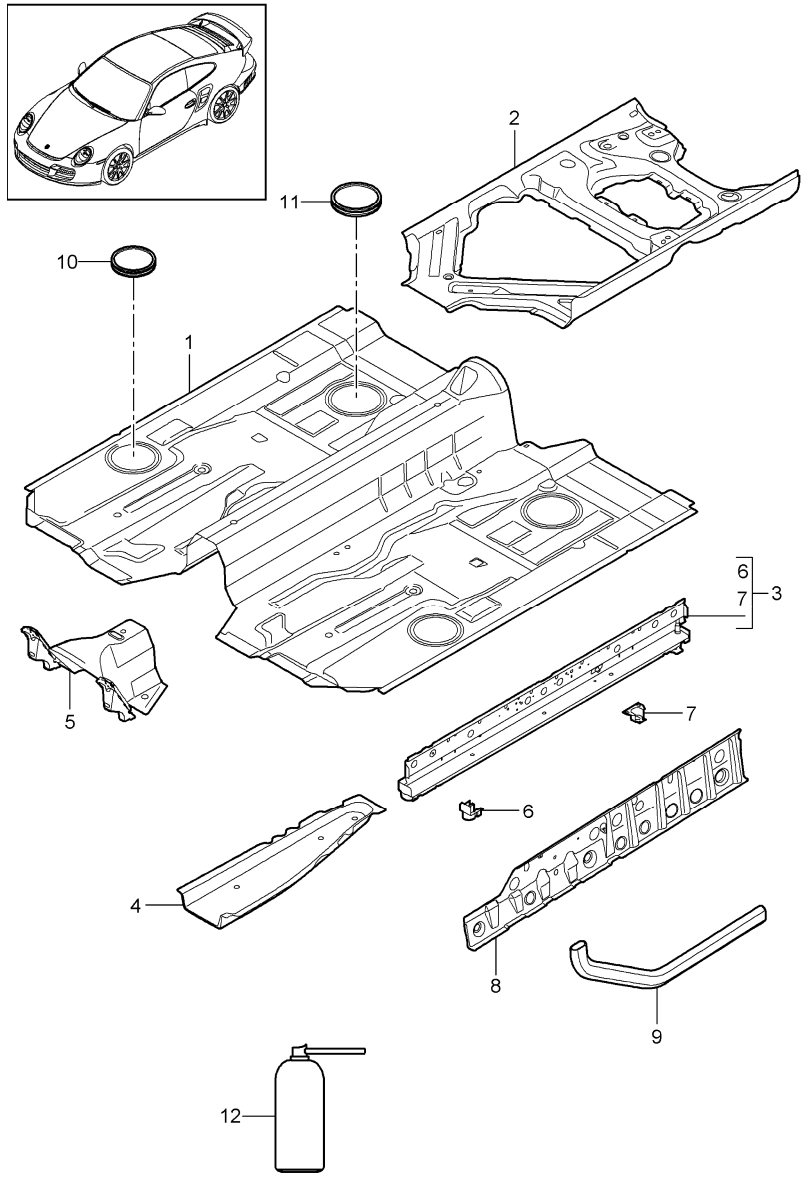

Pos	Part Number	Description	Remark	Qty	Model
		floor centre			
-	000 043 206 29	adhesive set body comprising:		X	
-	000 043 206 30	adhesive		1	
-	000 043 206 31	tool		1	
-	000 043 206 32	tool		1	
-	000 043 206 33	activator		1	
1	997 501 551 01	floor		1	
	GRV	prime coated			
2	997 501 953 01	seat support	/L	1	
	GRV	prime coated			
(2)	997 501 954 02	seat support	/R	1	
	GRV	prime coated			
3	997 501 157 01	side member	/L	1	
	GRV	prime coated			
(3)	997 501 158 01	side member	/R	1	
	GRV	prime coated			
4	997 501 525 00	side member	/L	1	
	GRV	prime coated			
(4)	997 501 526 00	side member	/R	1	
	GRV	prime coated			
5	996 501 751 00	extension		1	
	GRV	prime coated			
6	996 501 785 00	jacking point	/L/V	1	
	GRV	prime coated			
(6)	996 501 786 00	jacking point	/R/V	1	
	GRV	prime coated			
7	997 501 481 00	jacking point	/L/H	1	

Pos	Part Number	Description	Remark	Qty	Model
	GRV	prime coated			
(7)	997 501 482 00	jacking point	/R/H	1	
	GRV	prime coated			
8	997 501 329 00	retaining bracket	/L	1	
	GRV	prime coated			
(8)	997 501 330 00	retaining bracket	/R	1	
	GRV	prime coated			
9	997 501 439 00	support tube		2	
	GRV	prime coated use also: sealing compound Pos. 12 processing instructions see technical manual 51 49 55			
10	996 504 205 01	lid $ 125 MM		2	
11	996 504 201 01	lid $ 145 MM		2	
12	999 915 337 40	sealing compound		1	

Pos	Part Number	Description	Remark	Qty	Model

Model	Year	MG	SG	Illustration	Restrictions	UPD	20:20	06.02.2010	PORSCHE	PET	PORSCHE
997T2	2010	8	01	801-35		248	USA / CANADA				

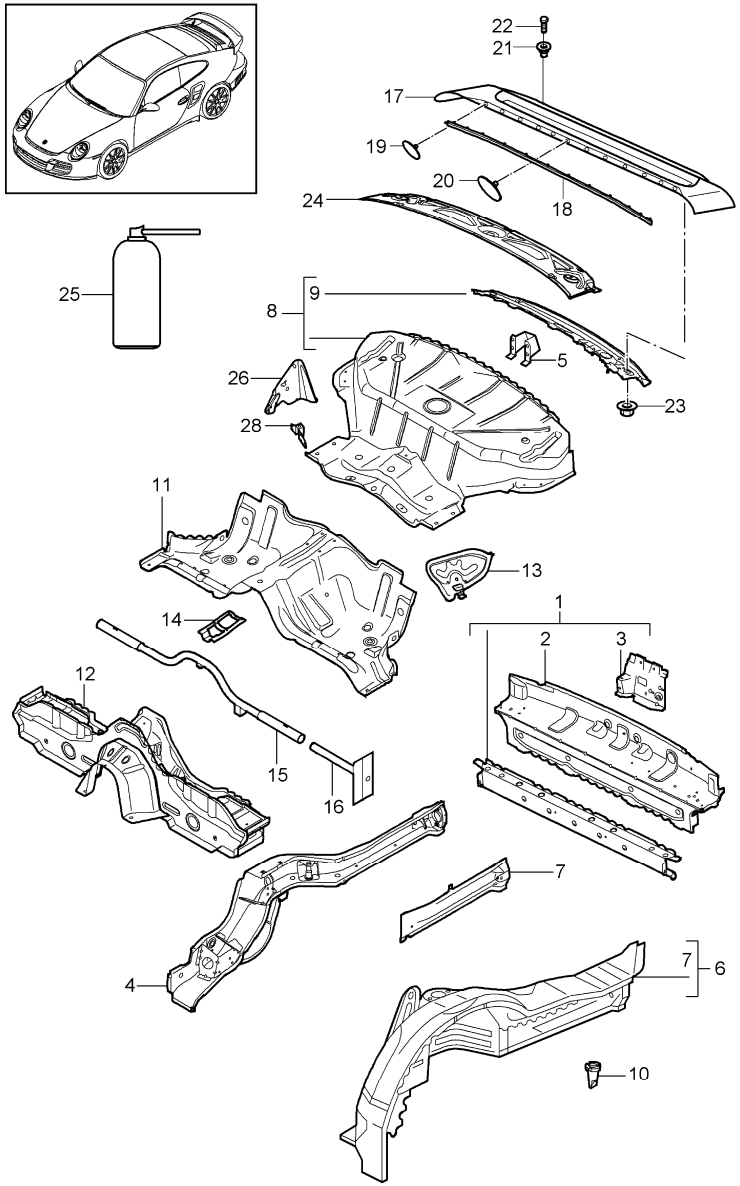

Pos	Part Number	Description	Remark	Qty	Model
		rear end			
1	997 501 973 01	terminal piece		1	
	GRV	prime coated			
2	997 501 273 01	end plate		1	
	GRV	prime coated			
3	997 501 247 00	lock carrier		1	
	GRV	prime coated			
4	997 501 977 00	side member	/L	1	
	GRV	prime coated use also: sealing compound Pos. 25 processing instructions see technical manual 53 48 55			
(4)	997 501 978 01	side member	/R	1	
	GRV	prime coated use also: sealing compound Pos. 25 processing instructions see technical manual 53 48 55			
5	997 502 525 00	bracket		1	
	GRV	prime coated			
6	997 501 943 02	wheel housing	/L	1	COUPE
	GRV	prime coated it is necessary to rework see workshop manual			
6	997 501 943 03	wheel housing	/L	1	CABRIO
	GRV	prime coated it is necessary to rework see workshop manual			
(6)	997 501 944 02	wheel housing	/R	1	COUPE
	GRV	prime coated it is necessary to rework see workshop manual			
(6)	997 501 944 03	wheel housing	/R	1	CABRIO

Pos	Part Number	Description	Remark	Qty	Model
	GRV	prime coated it is necessary to rework see workshop manual			
7	996 501 595 01	side member	/L	1	
	GRV	prime coated			
(7)	996 501 596 01	side member	/R	1	
	GRV	prime coated			
8	997 502 911 02	rear wall		1	
	GRV	prime coated order also: POS. 12 see workshop manual			
8	997 502 911 04	rear wall		1	CABRIO
	GRV	prime coated order also: POS. 12 see workshop manual			
9	997 502 673 00	cross member		1	
	GRV	prime coated			
9	997 502 673 01	cross member		1	CABRIO
	GRV	prime coated			
10	996 561 825 00	water drain valve wheel housing rear		2	I650
11	997 501 949 01	seat well		1	
	GRV	prime coated			
12	997 501 955 00	cross member seat well		1	
	GRV	prime coated			
13	997 501 461 00	reinforcement seat well	/L	1	
	GRV	prime coated			
(13)	996 501 462 02	reinforcement seat well	/R	1	
	GRV	prime coated			
14	996 501 659 01	bracket bearing bracket		1	
	GRV	prime coated			
15	996 501 411 00	pipe		1	
	GRV	prime coated			
16	996 501 415 00	sleeve		2	
	GRV	prime coated			
17	997 504 345 01	rear centre panel outer		1	
	GRV	prime coated			
18	997 504 612 00	gasket rear centre panel prime coated		1	
19	999 507 973 40	mount 2,8 X 6 X 30		2	
20	999 507 974 40	mount 2,8 X 6 X 50		10	
21	999 500 109 02	blind rivet nut M 6/0,8 - 3		3	
22	999 073 263 09	combination screw M 6 X 12		3	
23	999 076 029 02	hexagon nut M 6		2	
24	997 502 409 01	filler plate		1	
	GRV	prime coated rear centre panel use also:			
-	999 915 650 40	adhesive TEROMIX 6700		X	
-	000 043 300 48	tool		X	
		use also:			
-	000 043 206 29	adhesive set body comprising:		X	
-	000 043 206 30	adhesive		1	
-	000 043 206 31	tool		1	

Pos	Part Number	Description	Remark	Qty	Model
-	000 043 206 32	tool		1	
-	000 043 206 33	activator		1	
25	999 915 337 40	sealing compound		1	
26	997 504 797 00	bracket	/L	1	
	GRV	prime coated belt			
(26)	997 504 798 01	bracket	/R	1	
	GRV	prime coated belt			
27	996 502 653 01	connecting piece	/L	1	COUPE
	GRV	prime coated			
(27)	996 502 654 01	connecting piece	/R	1	COUPE
	GRV	prime coated			
27	997 502 553 00	connecting piece	/L	1	CABRIO
	GRV	prime coated			
(27)	997 502 554 00	connecting piece	/R	1	CABRIO
	GRV	prime coated			
28	997 501 611 00	mounting		1	
	GRV	prime coated			
(28)	997 501 612 00	mounting		1	
	GRV	prime coated			

Pos	Part Number	Description	Remark	Qty	Model

Model	Year	MG	SG	Illustration	Restrictions	UPD	20:20	06.02.2010	PORSCHE	PET	PORSCHE
997T2	2010	8	01	801-40		248	USA / CANADA				

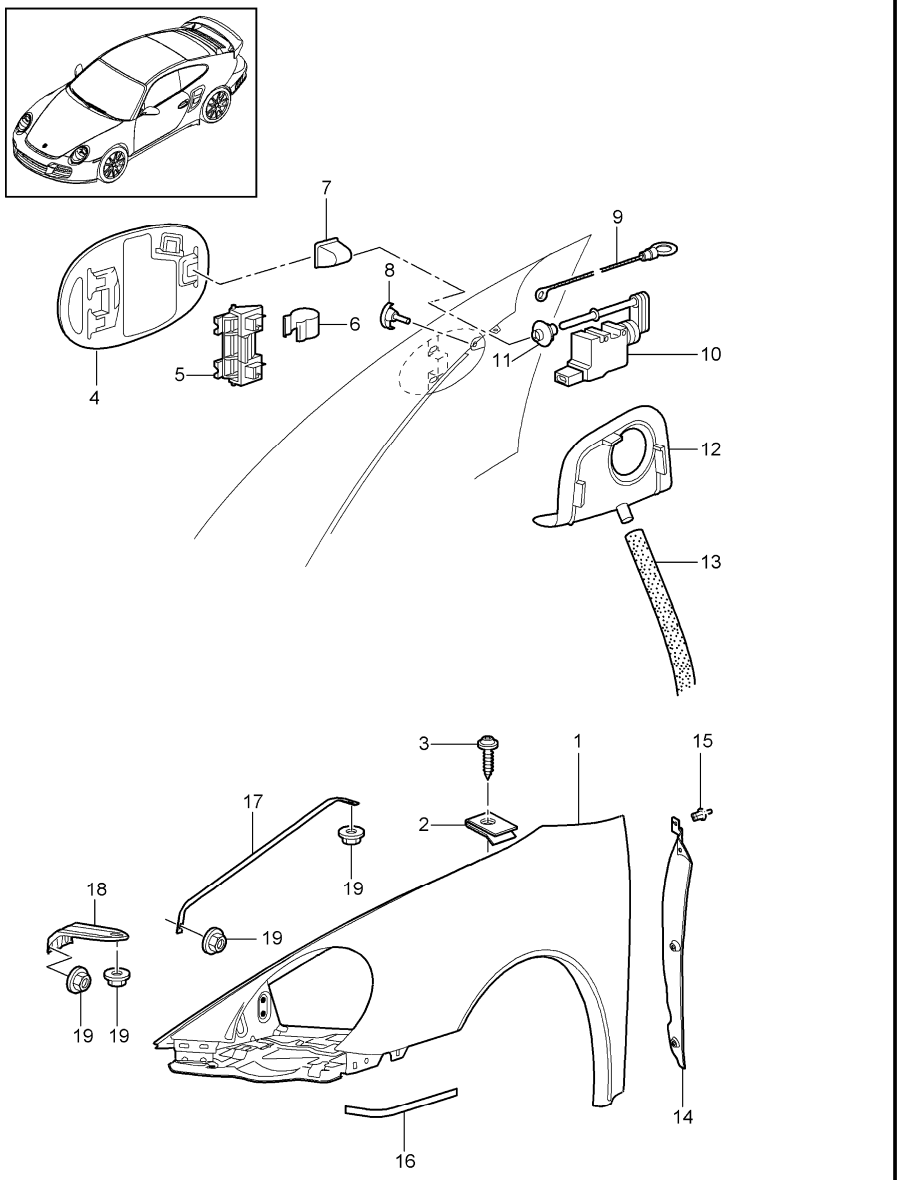

Pos	Part Number	Description	Remark	Qty	Model
		wing			
1	997 503 031 00	wing	/L	1	
	GRV	prime coated			
(1)	997 503 032 02	wing	/R	1	
	GRV	prime coated			
2	999 507 003 01	speed nut ST 6,3		22	
3	999 073 128 02	tapping screw ST 6,3 X 14		22	
4	997 504 134 00	fuel filler flap		1	
	GRV	prime coated			
5	997 201 063 00	hinge		1	
6	997 504 711 00	spring		1	
7	996 201 423 00	cap		1	
8	997 504 888 01	rubber stop		1	
9	996 201 493 00	emergency operation		1	
10	997 624 113 00	actuator		1	
11	997 624 505 00	guide rose		1	
12	997 201 667 00	sleeve		1	
13	996 201 153 00	hose		1	
14	997 504 641 02	cover	/L	1	
	01C	black			
(14)	997 504 642 02	cover	/R	1	
	01C	black			
15	999 591 712 40	expansion rivet A 6,0 X 12,0		6	
16	997 504 531 00	protective film	/L	1	
(16)	997 504 532 00	protective film	/R	1	
17	997 504 441 00	strut		2	
	GRV	prime coated			

Pos	Part Number	Description	Remark	Qty	Model
18	997 504 555 00	bracket		2	
	GRV	prime coated			
19	999 076 066 09	hexagon nut M 6		10	

Pos	Part Number	Description	Remark	Qty	Model

Model	Year	MG	SG	Illustration	Restrictions	UPD	20:20	06.02.2010
997T2	2010	8	01	801-45		248	USA / CANADA	

PORSCHE PET PORSCHE

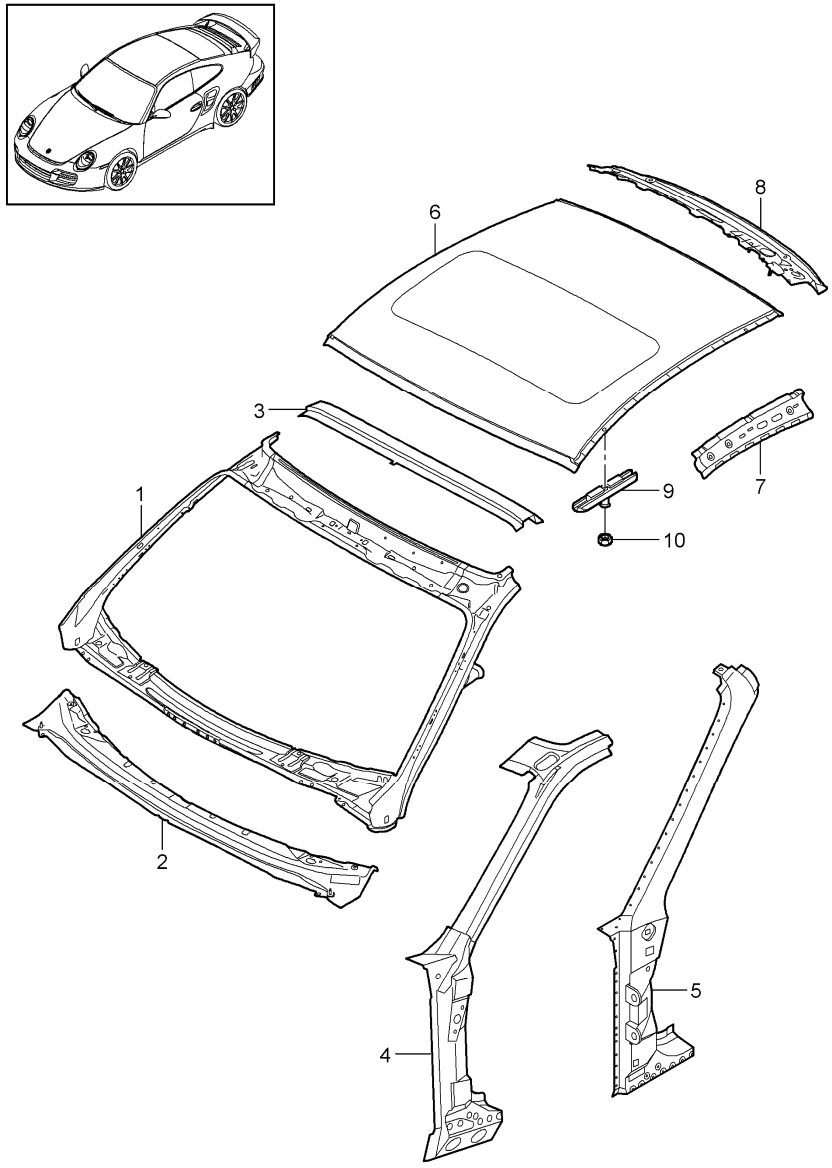

Pos	Part Number	Description	Remark	Qty	Model
		cowl			
1	997 502 137 00	cowl		1	
	GRV	prime coated inner			
(1)	997 502 137 01	cowl		1	CABRIO
	GRV	prime coated inner			
2	997 502 437 00	cowl		1	
	GRV	prime coated outer			
3	997 502 529 00	cowl		1	CABRIO
	GRV	prime coated outer			
4	997 502 135 03	reinforcement	/L	1	COUPE
	GRV	prime coated inner use also:			
(4)	997 502 135 04	reinforcement	/L	1	CABRIO
	GRV	prime coated inner use also:			
(4)	997 502 136 03	reinforcement	/R	1	COUPE
	GRV	prime coated inner use also:			
(4)	997 502 136 04	reinforcement	/R	1	CABRIO
	GRV	prime coated inner use also:			
-	000 043 206 29	adhesive set body comprising:		X	
-	000 043 206 30	adhesive		1	
-	000 043 206 31	tool		1	
-	000 043 206 32	tool		1	
-	000 043 206 33	activator		1	

Pos	Part Number	Description	Remark	Qty	Model
5	997 502 335 00	hinge pillar	/L	1	CABRIO
	GRV	prime coated			
		use also:			
(5)	997 502 336 00	hinge pillar	/R	1	CABRIO
	GRV	prime coated			
		use also:			
-	000 043 206 29	adhesive set body comprising:		X	
-	000 043 206 30	adhesive		1	
-	000 043 206 31	tool		1	
-	000 043 206 32	tool		1	
-	000 043 206 33	activator		1	
(6)	996 503 501 00	outer roof panel		1	
	GRV	prime coated			
(6)	997 503 501 00	outer roof panel		1	I461
	GRV	prime coated			
6	996 503 087 03	outer roof panel		1	I650
	GRV	prime coated			
(6)	997 503 087 00	outer roof panel		1	I461/650
	GRV	prime coated			
		use also:			
-	000 043 204 38	sealing material 70 ML processing instructions see technical manual		X	
7	996 502 305 03	roof frame	/L	1	
	GRV	prime coated			
(7)	996 502 306 03	roof frame	/R	1	
	GRV	prime coated			
8	997 502 505 00	roof frame		1	
	GRV	prime coated			
9	996 504 911 00	plate with threaded pin		X	
10	900 377 021 02	hexagon nut M10 X 1		X	

Model	Year	MG	SG	Illustration	Restrictions	UPD	20:21	06.02.2010
997T2	2010	8	01	801-50		248	USA / CANADA	

PORSCHE PET PORSCHE

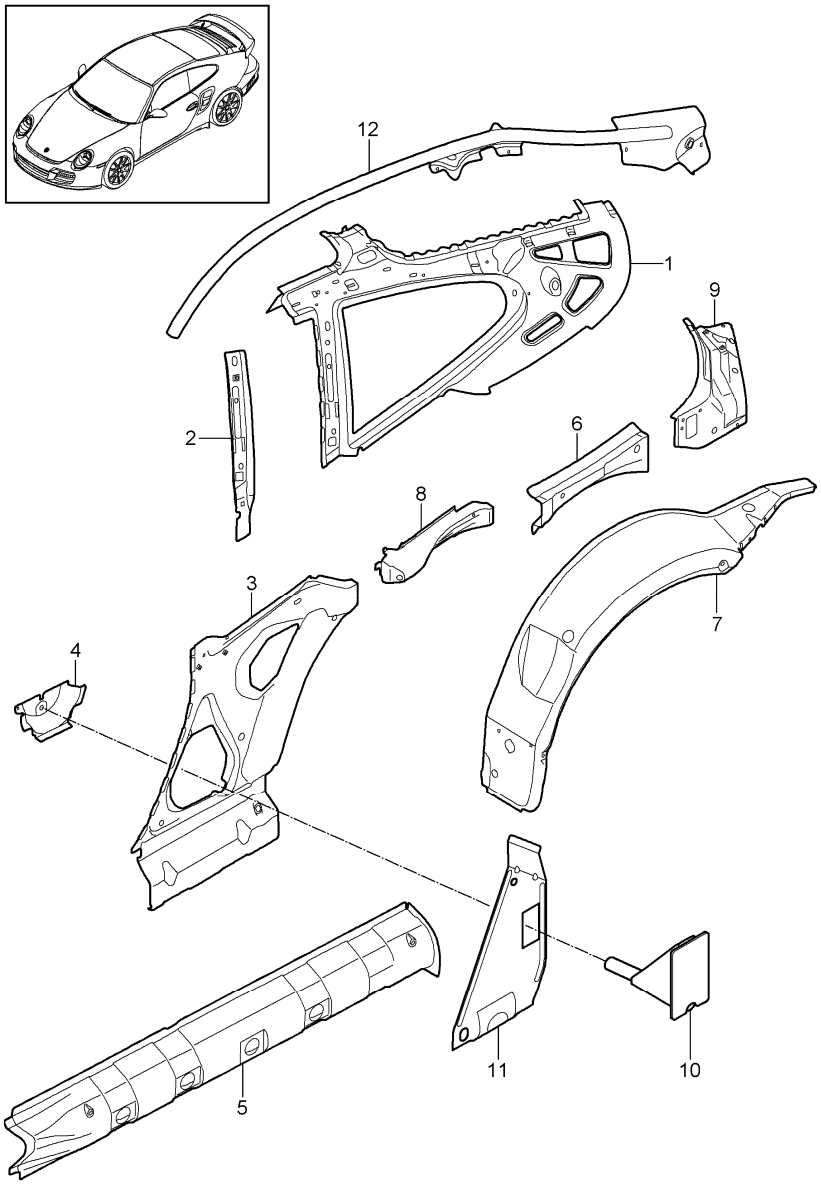

Pos	Part Number	Description	Remark	Qty	Model
		side section inner			COUPE
1	997 502 153 00	side section	/L	1	
	GRV	prime coated			
(1)	997 502 154 00	side section	/R	1	
	GRV	prime coated			
2	997 502 423 00	reinforcement	/L	1	
	GRV	prime coated			
(2)	997 502 424 00	reinforcement	/R	1	
	GRV	prime coated			
3	996 502 083 02	side section	/L	1	
	GRV	prime coated			
(3)	996 502 084 02	side section	/R	1	
	GRV	prime coated			
4	996 502 383 01	bracket		2	
	GRV	prime coated			
5	996 502 733 01	reinforcement	/L	1	
	GRV	prime coated			
(5)	996 502 734 01	reinforcement	/R	1	
	GRV	prime coated			
		use also:			
-	000 043 206 29	adhesive set body comprising:		X	
-	000 043 206 30	adhesive		1	
-	000 043 206 31	tool		1	
-	000 043 206 32	tool		1	
-	000 043 206 33	activator		1	
-	999 703 433 40	stopper 30 X 42 for POS. 5		10	

Pos	Part Number	Description	Remark	Qty	Model
6	997 502 115 00	side section	/L	1	
	GRV	prime coated			
(6)	997 502 116 00	side section	/R	1	
	GRV	prime coated			
7	997 502 215 05	wheel housing	/L	1	
	GRV	prime coated			
(7)	997 502 216 05	wheel housing	/R	1	
	GRV	prime coated			
8	997 502 707 00	reinforcement	/L	1	
	GRV	prime coated			
(8)	997 502 708 00	reinforcement	/R	1	
	GRV	prime coated			
9	997 502 161 00	side section	/L	1	
	GRV	prime coated			
(9)	997 502 162 00	side section	/R	1	
	GRV	prime coated			
10	997 502 711 00	pipe		2	
	GRV	prime coated			
11	997 502 745 00	reinforcement plate	/L	1	
	GRV	prime coated			
(11)	997 502 746 00	reinforcement plate	/R	1	
	GRV	prime coated			
12	997 502 619 00	pipe	/L	1	
	GRV	prime coated			
(12)	997 502 620 00	pipe	/R	1	
	GRV	prime coated			

Pos	Part Number	Description	Remark	Qty	Model

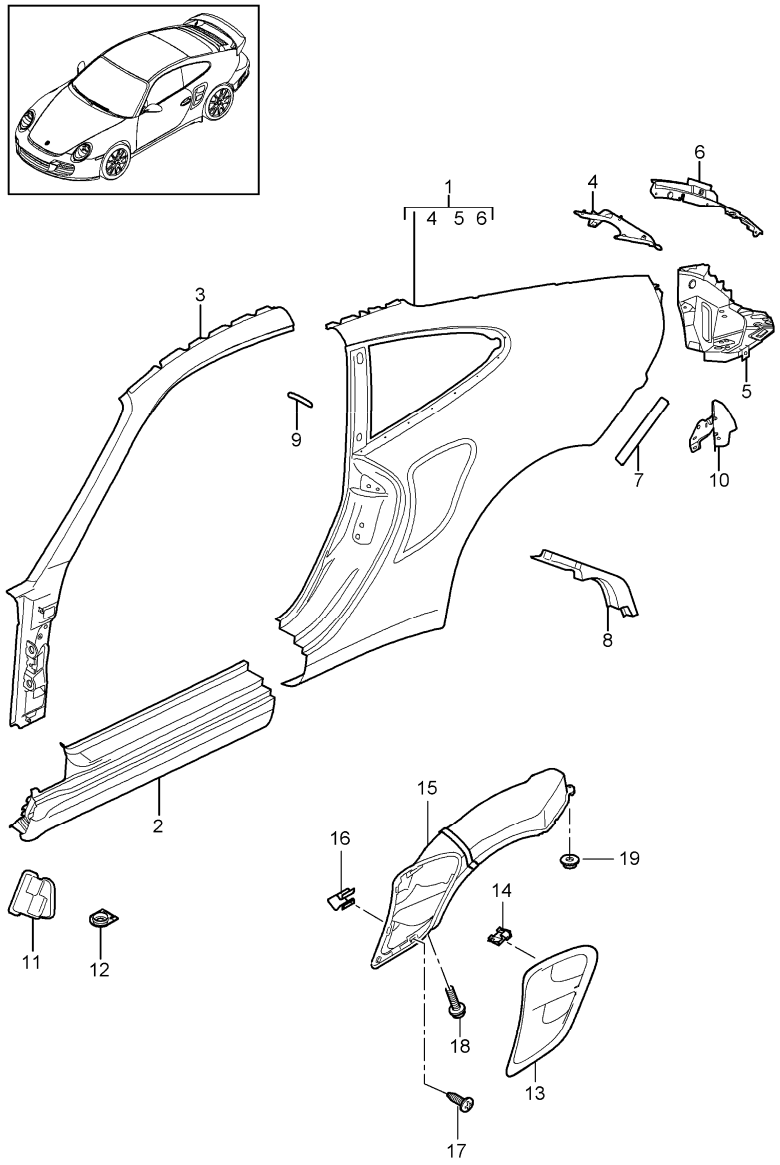

Pos	Part Number	Description	Remark	Qty	Model
		side section outer			COUPE
1	997 503 961 12	side section	/L	1	
	GRV	prime coated			
(1)	997 503 962 12	side section	/R	1	
	GRV	prime coated			
		use also:			
-	999 915 650 40	adhesive TEROMIX 6700		X	
-	000 043 300 48	tool see technical manual group 5 53 55 55		X	
2	997 503 963 02	door sill	/L	1	
	GRV	prime coated			
(2)	997 503 964 02	door sill	/R	1	
	GRV	prime coated			
3	997 503 965 03	roof frame	/L	1	
	GRV	prime coated			
(3)	997 503 966 03	roof frame	/R	1	
	GRV	prime coated			
4	997 502 365 00	sealing channel	/L	1	
	GRV	prime coated			
(4)	997 502 366 00	sealing channel	/R	1	
	GRV	prime coated			
5	997 502 461 01	frame for light	/L	1	
	GRV	prime coated			
(5)	997 502 462 01	frame for light	/R	1	
	GRV	prime coated			
6	997 502 213 02	bracket gas-pressure spring	/L	1	
	GRV	prime coated			

Pos	Part Number	Description	Remark	Qty	Model
(6)	997 502 214 01	bracket gas-pressure spring	/R	1	
	GRV	prime coated			
7	997 504 631 00	protective film		2	
8	997 504 907 00	seal see workshop manual		2	
9	996 537 237 00	protective film		2	
10	997 501 487 02	reinforcement	/L	1	
	GRV	prime coated use also:			
(10)	997 501 488 02	reinforcement	/R	1	
	GRV	prime coated use also:			
-	000 043 206 29	adhesive set body comprising:		X	
-	000 043 206 30	adhesive		1	
-	000 043 206 31	tool		1	
-	000 043 206 32	tool		1	
-	000 043 206 33	activator		1	
11	997 572 311 01	water protection	/L	1	
(11)	997 572 312 01	water protection	/R	1	
12	999 703 475 40	water drain sleeve door sill		2	
13	997 504 361 01	air inlet	/L	1	
	G2X	prime coated			
(13)	997 504 362 01	air inlet	/R	1	
	G2X	prime coated			
14	999 507 835 09	clamp 1,50		4	
15	997 504 459 00	air duct inner front	/L	1	
	01C	satin black			
(15)	997 504 460 00	air duct inner front	/R	1	
	01C	satin black			
16	999 507 836 09	clamp 9,0 X 13,0/4,0		10	
17	999 073 155 09	tapping screw ST 4,2 X 13		14	
18	999 074 060 09	hexagon-head bolt M6 X 18		20	
19	999 076 078 01	hexagon nut M 6		4	

Model	Year	MG	SG	Illustration	Restrictions	UPD	20:21	06.02.2010
997T2	2010	8	01	801-60		248	USA / CANADA	

PORSCHE PET PORSCHE

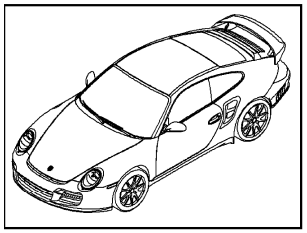

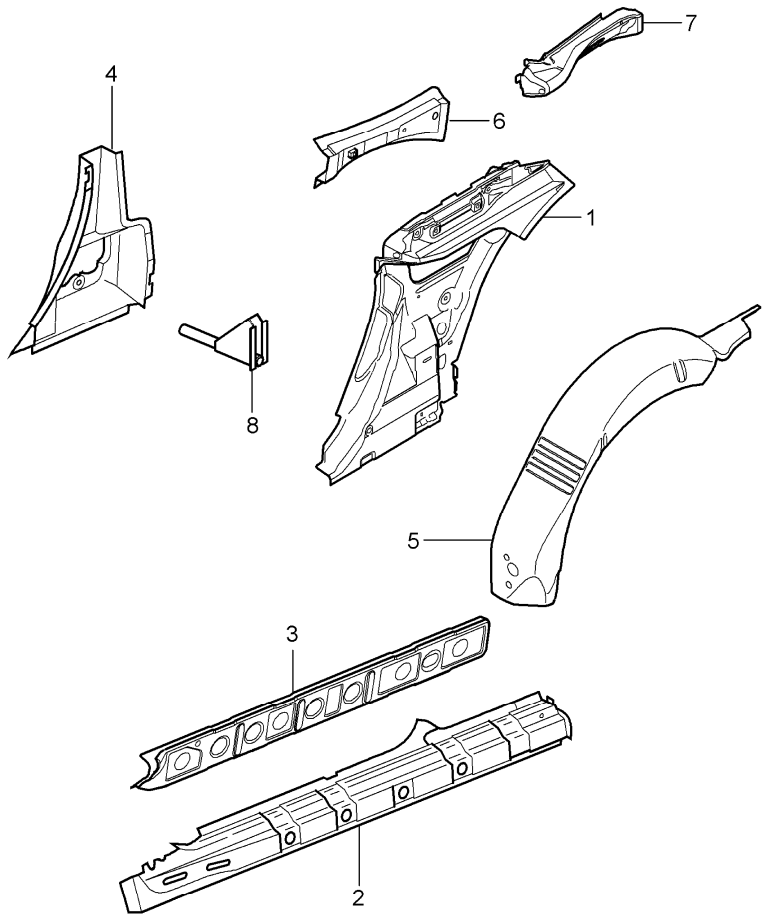

Pos	Part Number	Description	Remark	Qty	Model
		side section inner			CABRIO
1	997 502 073 02	side section	/L	1	
	GRV	prime coated			
(1)	997 502 074 02	side section	/R	1	
	GRV	prime coated			
2	997 502 663 00	reinforcement	/L	1	
	GRV	prime coated use also:			
(2)	997 502 664 00	reinforcement	/R	1	
	GRV	prime coated use also:			
-	000 043 206 29	adhesive set body comprising:		X	
-	000 043 206 30	adhesive		1	
-	000 043 206 31	tool		1	
-	000 043 206 32	tool		1	
-	000 043 206 33	activator		1	
3	996 502 683 01	separator	/L	1	
	GRV	prime coated			
(3)	996 502 684 01	separator	/R	1	
	GRV	prime coated			
4	996 502 415 01	b-pillar	/L	1	
	GRV	prime coated			
(4)	996 502 416 01	b-pillar	/R	1	
	GRV	prime coated			
5	997 502 215 02	wheel housing	/L	1	
	GRV	prime coated			
(5)	997 502 216 02	wheel housing	/R	1	
	GRV	prime coated			

Pos	Part Number	Description	Remark	Qty	Model
6	997 502 115 02	side section	/L	1	
	GRV	prime coated			
(6)	997 502 116 02	side section	/R	1	
	GRV	prime coated			
7	997 502 161 01	side section	/L	1	
	GRV	prime coated			
(7)	997 502 162 01	side section	/R	1	
	GRV	prime coated			
8	997 502 711 01	pipe		2	
	GRV	prime coated			

Pos	Part Number	Description	Remark	Qty	Model

Model	Year	MG	SG	Illustration	Restrictions	UPD	20:21	06.02.2010
997T2	2010	8	01	801-65		248	USA / CANADA	

PORSCHE PET PORSCHE

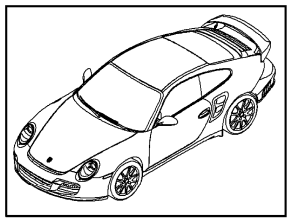

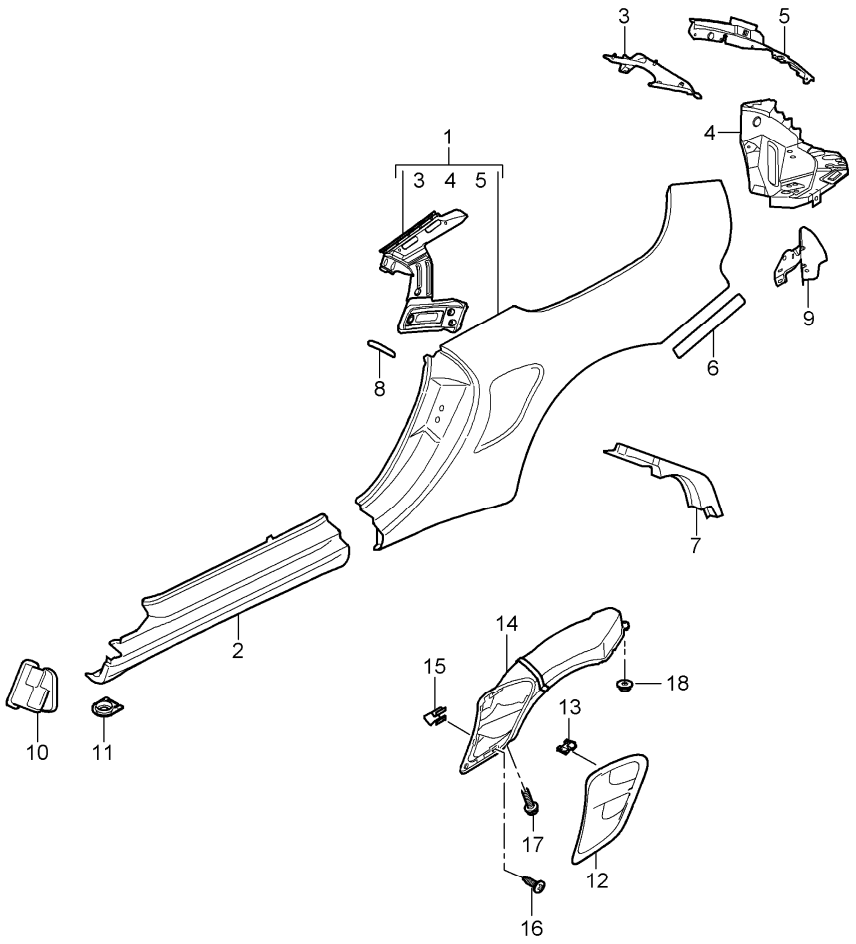

Pos	Part Number	Description	Remark	Qty	Model
		side section outer			CABRIO
1	997 503 961 06	side section	/L	1	
	GRV	prime coated			
(1)	997 503 962 06	side section	/R	1	
	GRV	prime coated			
		use also:			
-	999 915 650 40	adhesive TEROMIX 6700		X	
-	000 043 300 48	tool processing instructions see technical manual group 5 53 55 55		X	
2	997 503 963 03	door sill	/L	1	
	GRV	prime coated			
(2)	997 503 964 03	door sill	/R	1	
	GRV	prime coated			
3	997 502 365 01	sealing channel	/L	1	
	GRV	prime coated			
(3)	997 502 366 01	sealing channel	/R	1	
	GRV	prime coated			
4	997 502 461 01	frame for light	/L	1	
	GRV	prime coated			
(4)	997 502 462 01	frame for light	/R	1	
	GRV	prime coated			
5	997 502 213 02	bracket	/L	1	
	GRV	prime coated			
(5)	997 502 214 01	bracket	/R	1	
	GRV	prime coated			
6	997 504 631 00	protective film		2	

Pos	Part Number	Description	Remark	Qty	Model
7	997 504 907 00	seal it is necessary to rework see workshop manual		2	
8	996 537 237 00	protective film		2	
9	997 501 487 02	reinforcement	/L	1	
	GRV	prime coated			
(9)	997 501 488 02	reinforcement	/R	1	
	GRV	prime coated			
10	997 572 311 01	water protection	/L	1	
(10)	997 572 312 01	water protection	/R	1	
11	999 703 475 40	water drain sleeve door sill		2	
12	997 504 361 01	air inlet	/L	1	
	G2X	prime coated			
(12)	997 504 362 01	air inlet	/R	1	
	G2X	prime coated			
13	999 507 835 09	clamp 1,50		4	
14	997 504 459 00	air duct		1	
	01C	satin black			
(14)	997 504 460 00	air duct		1	
	01C	satin black			
15	999 507 836 09	clamp 9,0 x 13,0/4,0		10	
16	999 073 155 09	tapping screw st 4,2 x 13		14	
17	999 074 060 09	hexagon-head bolt m 6 x 18		20	
18	999 076 078 01	hexagon nut m 6		4	

Pos	Part Number	Description	Remark	Qty	Model

Model	Year	MG	SG	Illustration	Restrictions	UPD	20:21	06.02.2010
997T2	2010	8	01	801-70		248	USA / CANADA	

PORSCHE PET PORSCHE

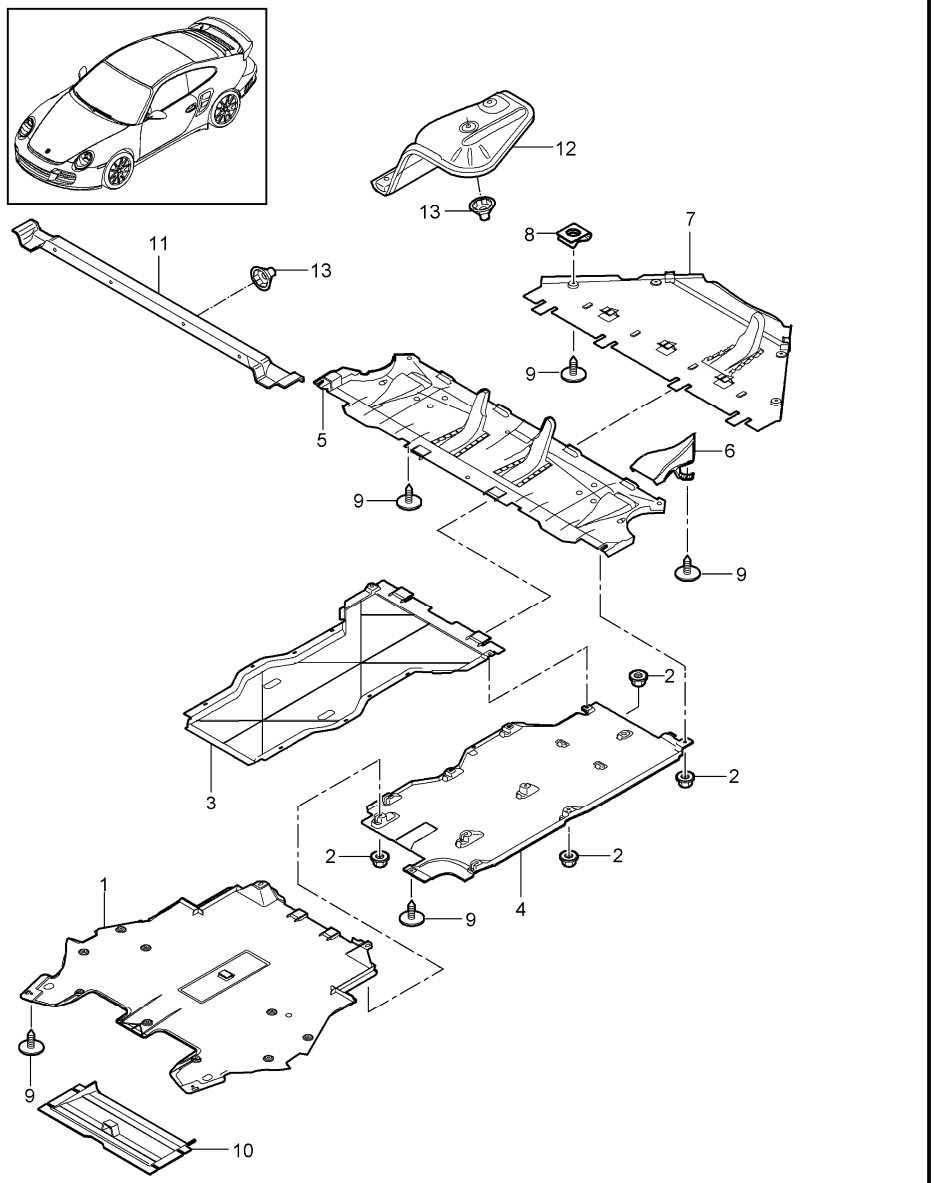

Pos	Part Number	Description	Remark	Qty	Model
		linings underbody			
1	997 504 527 01	cover front		1	
2	999 049 028 40	plastic nut T 5		26	
3	997 504 043 00	cover centre		1	
4	997 504 343 03	cover	/L	1	
(4)	997 504 344 03	cover centre	/R	1	
5	997 504 029 00	cover		1	TURBO I480
(5)	997 504 629 03	cover		1	TURBO I249
6	997 575 183 00	air duct	/L	1	
(6)	997 575 184 00	air duct brake	/R	1	
7	997 504 429 01	cover transmission		1	I480
8	999 507 795 09	speed nut ST 4,8		9	
9	999 073 231 09	tapping screw ST 4,8 X 16		15	
10	997 575 161 01	cooling air duct		1	TURBO
11	996 505 471 00	heat protection		1	
12	997 505 477 01	heat protection	/L	1	
(12)	997 505 478 01	heat protection	/R	1	
13	999 049 025 09	collar nut T5		12	

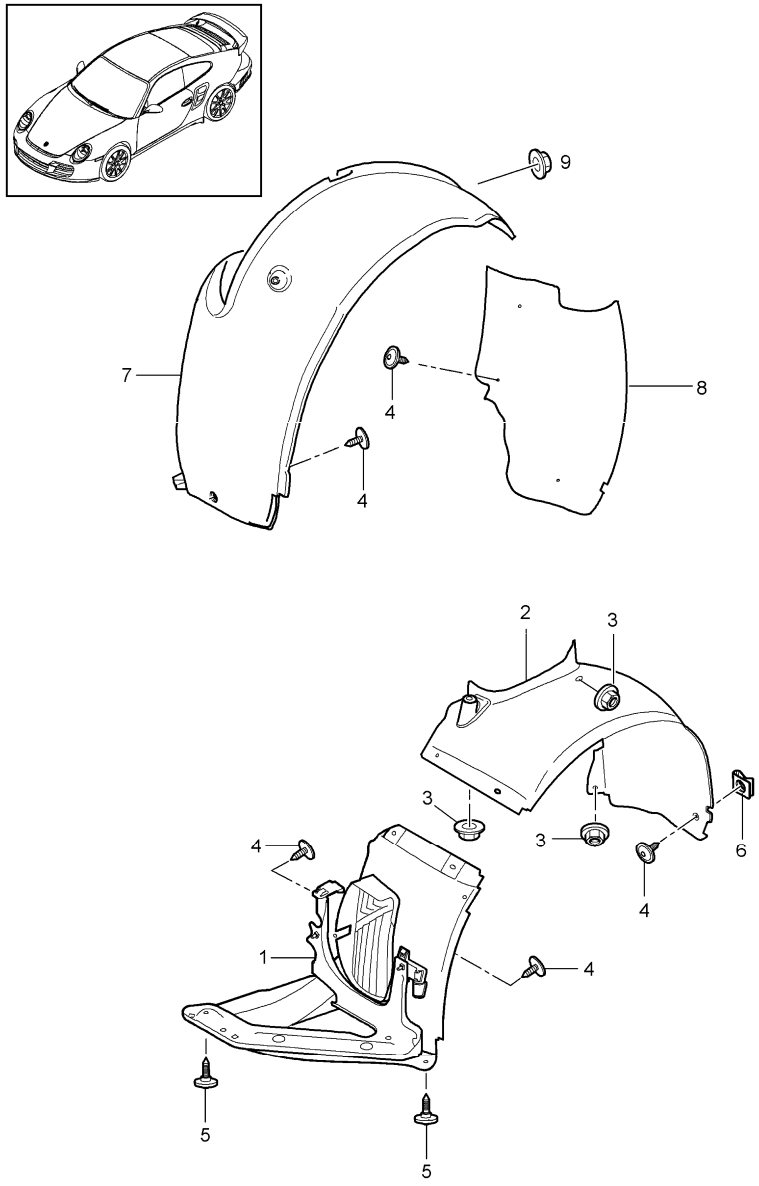

Pos	Part Number	Description	Remark	Qty	Model
		linings wheel housing			
1	997 504 123 01	wheel-housing liner front	/L/V	1	
(1)	997 504 124 01	wheel-housing liner front	/R/V	1	
2	997 504 203 01	wheel-housing liner	/L/H	1	
(2)	997 504 204 01	wheel-housing liner front	/R/H	1	
3	999 049 028 40	plastic nut T5		12	
4	999 073 231 09	tapping screw ST 4,8 X 16		18	
5	999 073 227 09	tapping screw ST 4,8 X 19		6	
6	999 507 795 09	speed nut ST 4,8		5	
7	997 504 573 02	wheel-housing liner	/L/V	1	
(7)	997 504 574 02	wheel-housing liner rear	/R/V	1	
8	997 504 623 00	wheel-housing liner	/L/H	1	
(8)	997 504 624 00	wheel-housing liner	/R/H	1	
9	999 049 007 40	plastic nut T5/2 X 10,5		12	

Model	Year	MG	SG	Illustration	Restrictions	UPD	20:22	06.02.2010	PORSCHE PET PORSCHE
997T2	2010	8	02	802-00		248	USA / CANADA		

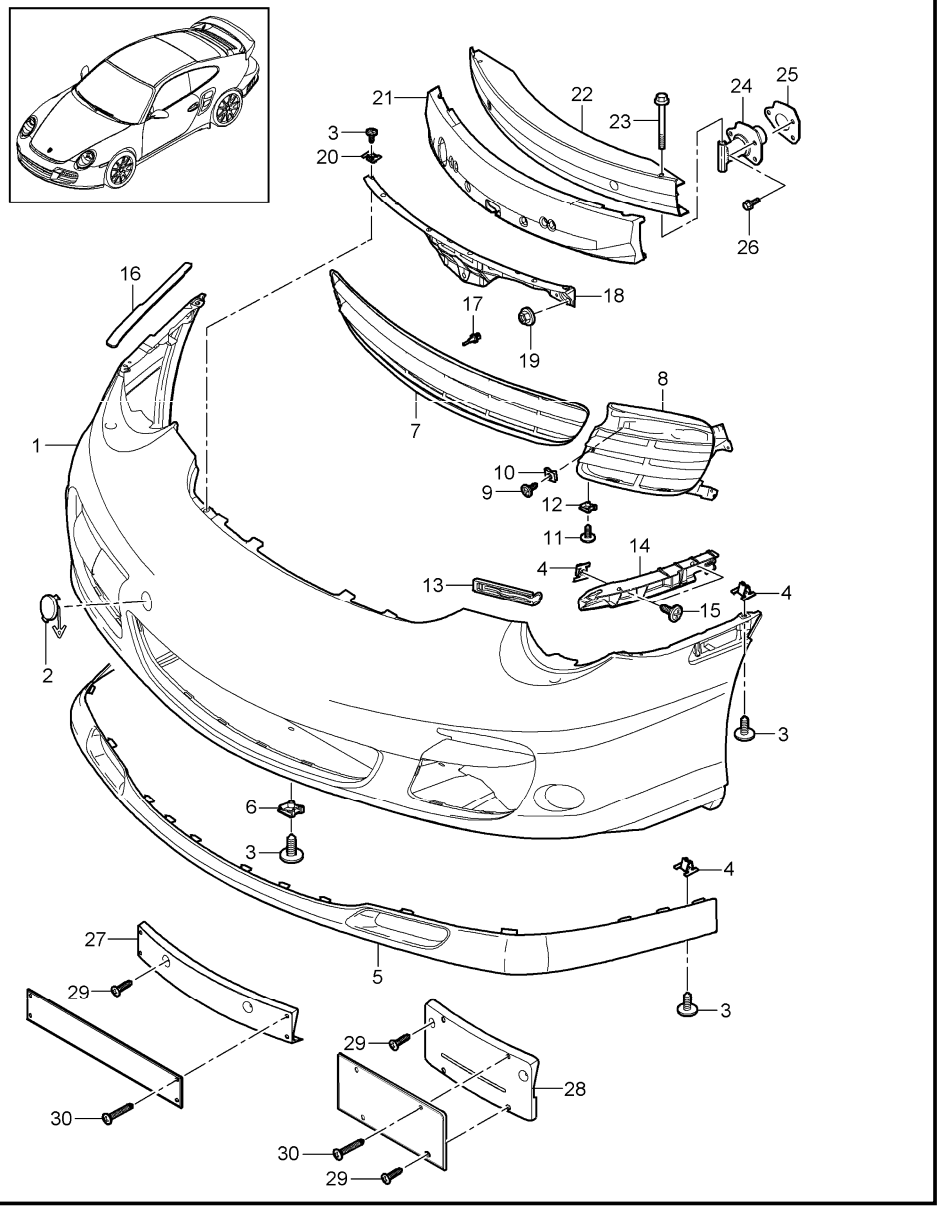

Pos	Part Number	Description	Remark	Qty	Model
		bumper front			
1	997 505 191 06	lining prime coated		1	I288
2	997 505 703 01	cover		1	
	G2X	prime coated			
3	999 073 227 09	tapping screw ST 4,8 X 19		10	
4	999 507 849 01	captive nut ST 4,8		10	
5	997 505 557 01	spoiler		1	
	01C	satin black			
(5)	997 505 557 11	spoiler prime coated		1	IXAF
6	999 591 699 01	speed nut ST 4,8		1	
7	997 505 541 04	retaining frame centre		1	
	01C	satin black			
8	997 505 563 06	retaining frame for vanes lateral left	/L	1	
	01C	satin black			
8	997 505 763 50	set vanes two-piece left	/L	1	
	9B1	titanium metallic			
(8)	997 505 564 06	retaining frame lateral right	/R	1	
	01C	satin black			
(8)	997 505 764 50	set vanes two-piece right	/R	1	

Pos	Part Number	Description	Remark	Qty	Model
	9B1	titanium metallic			
-	999 902 057 40	velcro fastener for direction indicator light		2	
9	999 073 080 02	tapping screw ST 4,2 X 16		4	
10	999 507 768 02	speed nut ST 4,2		4	
11	999 073 505 01	tapping screw 4,8 X 16		20	
12	999 507 795 09	speed nut ST 4,8		2	
13	997 505 719 00	fixing device		2	
14	997 505 535 01	retaining strip lateral	/L	1	
(14)	997 505 536 01	retaining strip lateral	/R	1	
15	999 073 418 01	tapping screw ST 4,8 X 19		4	
(16)	997 504 531 00	protective film	/L	1	
16	997 504 532 00	protective film	/R	1	
17	996 641 142 00	temperature sensor		1	
18	997 505 531 00	retaining strip centre		1	
19	999 076 048 01	hexagon nut M6		3	
20	999 507 849 01	captive nut ST 4,8		3	
21	997 505 777 00	insert		1	
22	997 505 141 02	bumper reinforcement		1	
23	900 378 088 01	hexagon-head bolt M 12 X 100		2	
24	997 505 319 00	impact absorber		2	
25	997 505 751 02	seal impact absorber		2	
26	900 378 267 09	combination screw M 8 X 30		6	
28	997 701 107 01	support number plate		1	I218
	01C	black			
29	999 919 243 01	screw 5.0 x 13		2	I210/211/218
30	999 919 242 01	screw 5,0 x 28		2	I210/211/218

Model	Year	MG	SG	Illustration	Restrictions	UPD	20:22	06.02.2010
997T2	2010	8	02	802-05		248	USA / CANADA	

PORSCHE PET PORSCHE

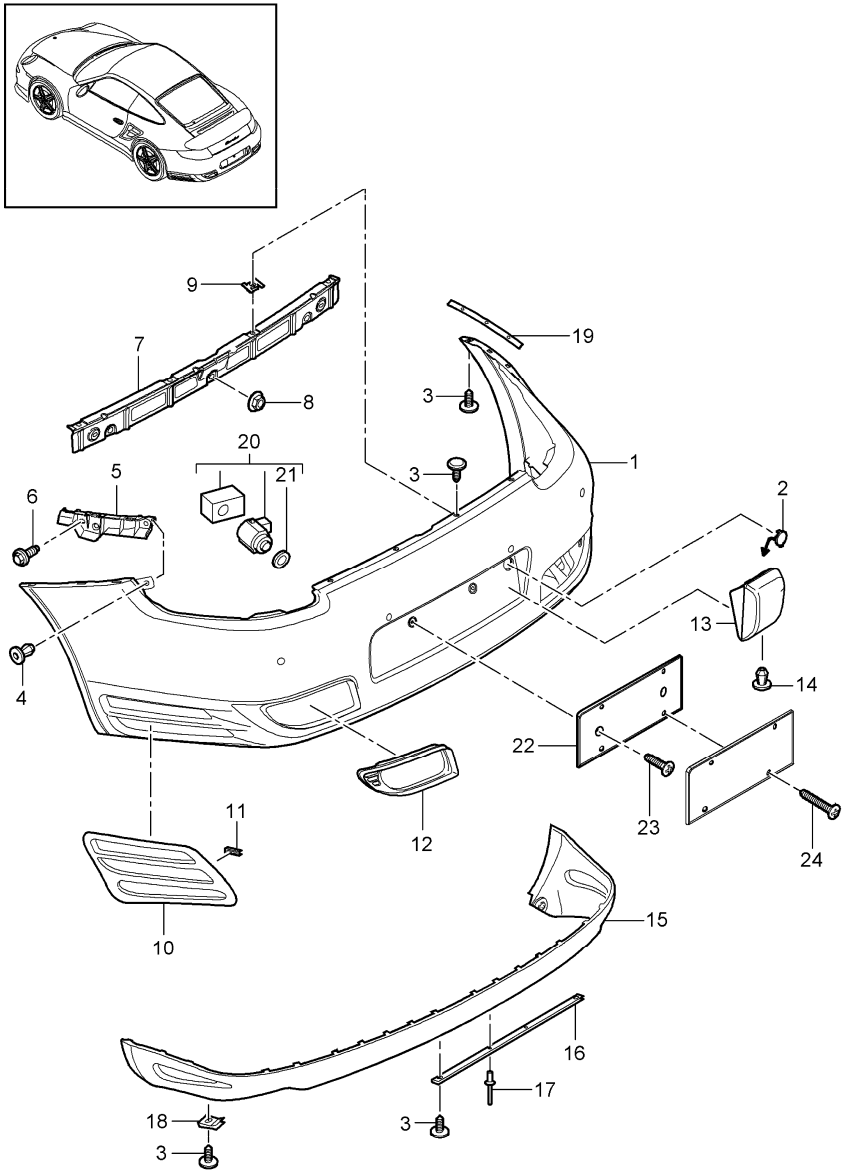

Pos	Part Number	Description	Remark	Qty	Model
		lining bumper rear			
1	997 505 941 09	lining prime coated		1	-I635
1	997 505 941 10	lining prime coated		1	I635
2	997 505 803 02	cover towing lug		1	
	G2X	prime coated			
3	999 073 227 09	tapping screw 4,8 X 16		10	
4	999 591 941 40	expansion rivet ST 4,8		2	
5	997 505 635 01	retaining strip lateral	/L	1	
(5)	997 505 636 01	retaining strip lateral	/R	1	
6	900 075 459 01	combination screw M6 X 12		4	
7	997 505 641 03	attachment strip centre		1	
8	999 076 078 01	hexagon nut M6		4	
9	999 507 590 02	captive nut ST 4,8		6	
10	997 505 663 00	frame air exhaust	/L	1	
	01C	black			
(10)	997 505 664 00	frame air exhaust	/R	1	
	01C	black			
11	999 507 696 00	u-clamp 1,20 - 1,70		10	
12	997 505 651 02	cover exhaust pipe	/L	1	
	01C	black			

Pos	Part Number	Description	Remark	Qty	Model
(12)	997 505 652 02	cover exhaust pipe	/R	1	
	01C	black			
(13)	997 505 625 03	lining buffer	/L	1	
	G2X	prime coated			
13	997 505 626 03	lining buffer	/R	1	
	G2X	prime coated			
14	999 591 712 40	expansion rivet 6,0 X 12,0		6	
15	997 505 511 00	lining lower		1	
	01C	black			
(15)	997 505 511 01	lining lower		1	IXAF/XUE
16	997 505 837 01	retaining strip lower		1	
17	999 190 104 30	blind rivet A 3,2 X 7,9		2	
18	999 507 795 09	speed nut ST 4,8		6	
19	997 504 631 00	protective film		2	
20	955 606 275 04	sensor ParkAssist		4	I635
21	7L6 919 659	round seal		4	I635
22	997 701 113 00	support number plate		1	I218
	01C	black			
-	999 911 740 40	adhesive tape for number plate without frame		3	
23	999 919 243 01	screw support number plate 5 X 13		X	
24	999 919 242 01	screw support number plate 5 X 28		X	

Model	Year	MG	SG	Illustration	Restrictions	UPD	20:22	06.02.2010
997T2	2010	8	02	802-07		248	USA / CANADA	

PORSCHE PET PORSCHE

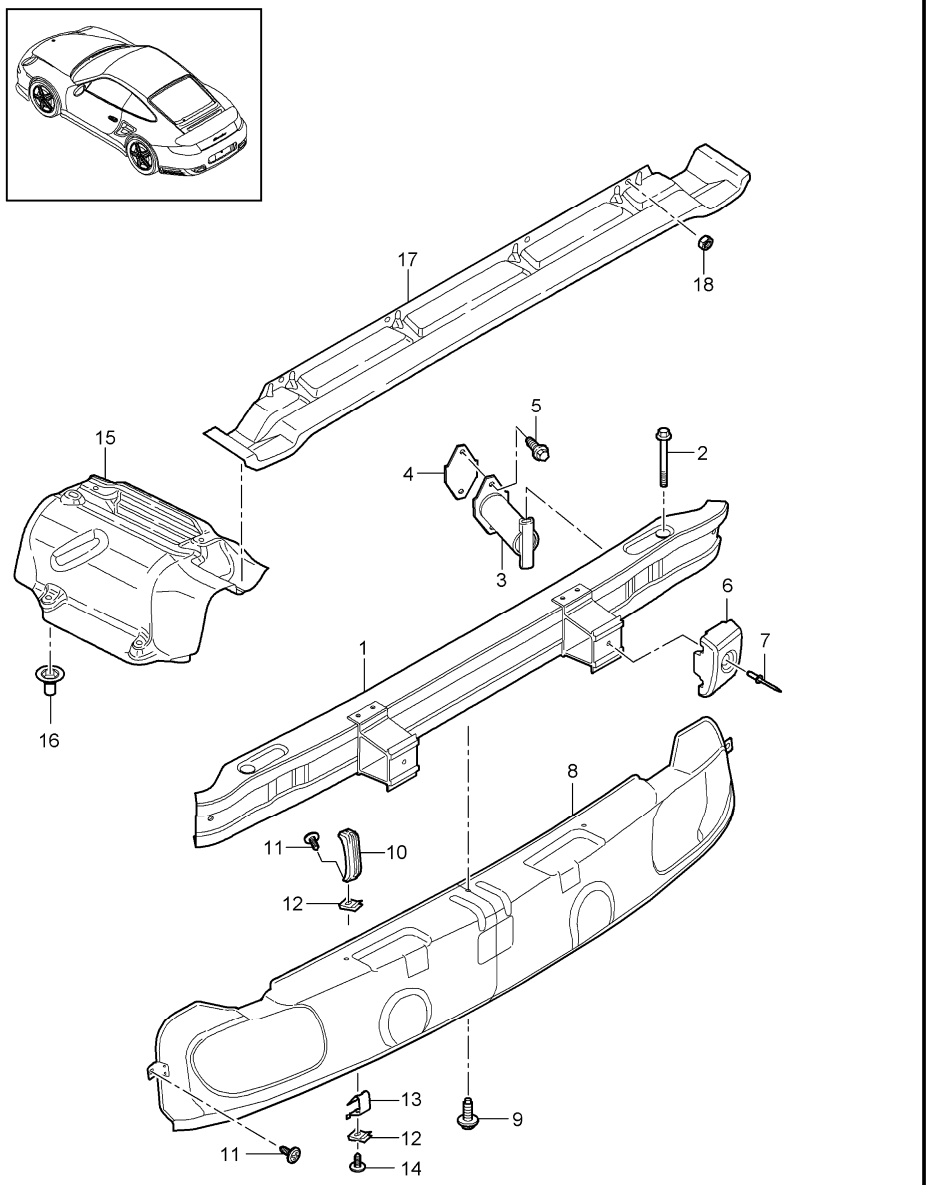

Pos	Part Number	Description	Remark	Qty	Model
		bumper heat protection rear			
1	997 505 121 11	bumper reinforcement		1	I553
2	900 378 088 01	hexagon-head bolt M 12 X 100		2	
(3)	996 505 015 00	impact absorber		2	I113
(4)	996 505 775 01	desk pad impact absorber		2	I113
5	900 378 267 01	hexagon-head bolt M 8 X 30		4	
(6)	997 505 845 01	buffer	/L	1	I553
(6)	997 505 845 01	buffer	/L	1	I553
6	997 505 846 01	buffer	/R	1	I553
7	999 190 312 30	buttonhead rivet 4,8 X 24,8		2	I553
8	997 505 475 03	heat protection centre		1	
9	999 075 056 01	combination screw M 6 X 22		3	
10	997 505 639 01	rear support		2	
11	999 073 418 01	tapping screw ST 4,8 X 16		2	
12	999 507 795 09	speed nut ST 4,8		4	
13	997 505 649 00	filler plate		2	
14	999 073 227 09	tapping screw ST 4,8 X 19		2	
15	997 505 477 03	heat protection lateral left	/L	1 1 1	
(15)	997 505 478 03	heat protection lateral right	/R	1	
16	999 049 025 09	collar nut T5		8	

Pos	Part Number	Description	Remark	Qty	Model
17	997 505 475 03	heat protection upper		1	
18	999 049 029 01	hexagon nut T5		4	

Pos	Part Number	Description	Remark	Qty	Model

Model	Year	MG	SG	Illustration	Restrictions	UPD	20:23	06.02.2010
997T2	2010	8	03	803-00		248	USA / CANADA	

PORSCHE PET PORSCHE

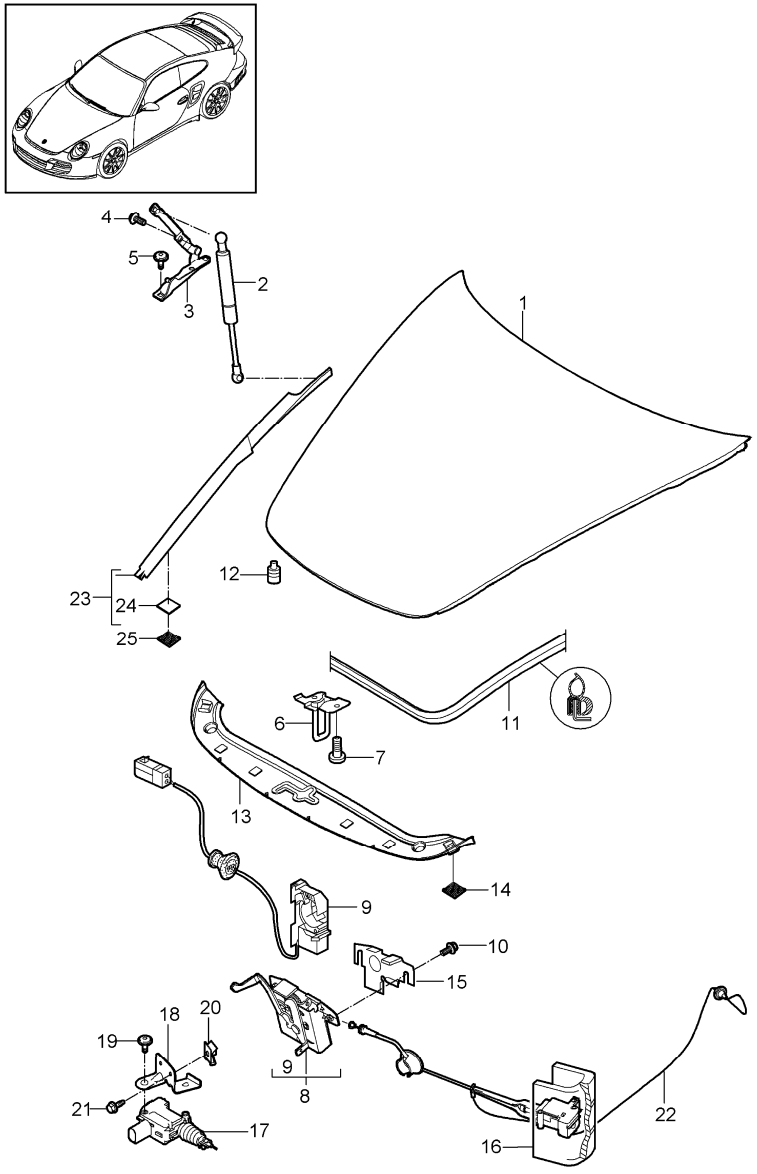

Pos	Part Number	Description	Remark	Qty	Model
		lid front			
1	997 511 011 00	lid		1	
	GRV	prime coated			
2	997 511 551 01	gas-pressure spring		2	
3	997 511 151 01	hinge	/L	1	
(3)	997 511 152 01	hinge	/R	1	
4	999 073 357 01	oval-head screw M 6 X 12		4	
5	999 073 348 09	oval-head screw M 6 X 20		4	
6	997 511 051 00	lock upper part		1	
7	999 073 378 02	round head screw M 6 X 20		2	
8	997 511 053 00	lock lower part		1	
9	997 613 206 00	microswitch		1	
10	900 075 505 01	combination screw M 6 X 20		2	
11	997 511 611 01	gasket		1	
12	999 703 140 41	rubber buffer		2	
13	997 504 811 04	trim cover		1	
	FMT	satin black			
14	999 902 049 40	velcro fastener		4	
15	996 511 653 00	cover		1	
16	997 511 117 00	actuator		1	
17	996 624 119 01	actuator emergency operation		1	I553
18	997 511 489 01	bracket actuator		1	I553
19	999 919 188 09	oval-head screw 5,0 X 30		2	I553
20	999 591 882 02	speed nut M 6		2	I553

Pos	Part Number	Description	Remark	Qty	Model
21	900 075 466 01	combination screw M 6 X 16		2	
22	997 511 085 00	cable luggage compartment		1	I553
(22)	997 511 085 01	cable luggage compartment		1	GT2 I553
(23)	997 572 465 02	trim cover wing	/L	1	
	02A	black			
23	997 572 466 02	trim cover wing	/R	1	
	02A	black			
24	999 902 052 40	velcro fastener cover 20 X 20		4	
25	999 902 051 40	velcro fastener wing 20 X 20		4	

Pos	Part Number	Description	Remark	Qty	Model

Model	Year	MG	SG	Illustration	Restrictions	UPD	20:23	06.02.2010	PORSCHE	PET	PORSCHE
997T2	2010	8	03	803-05		248	USA / CANADA				

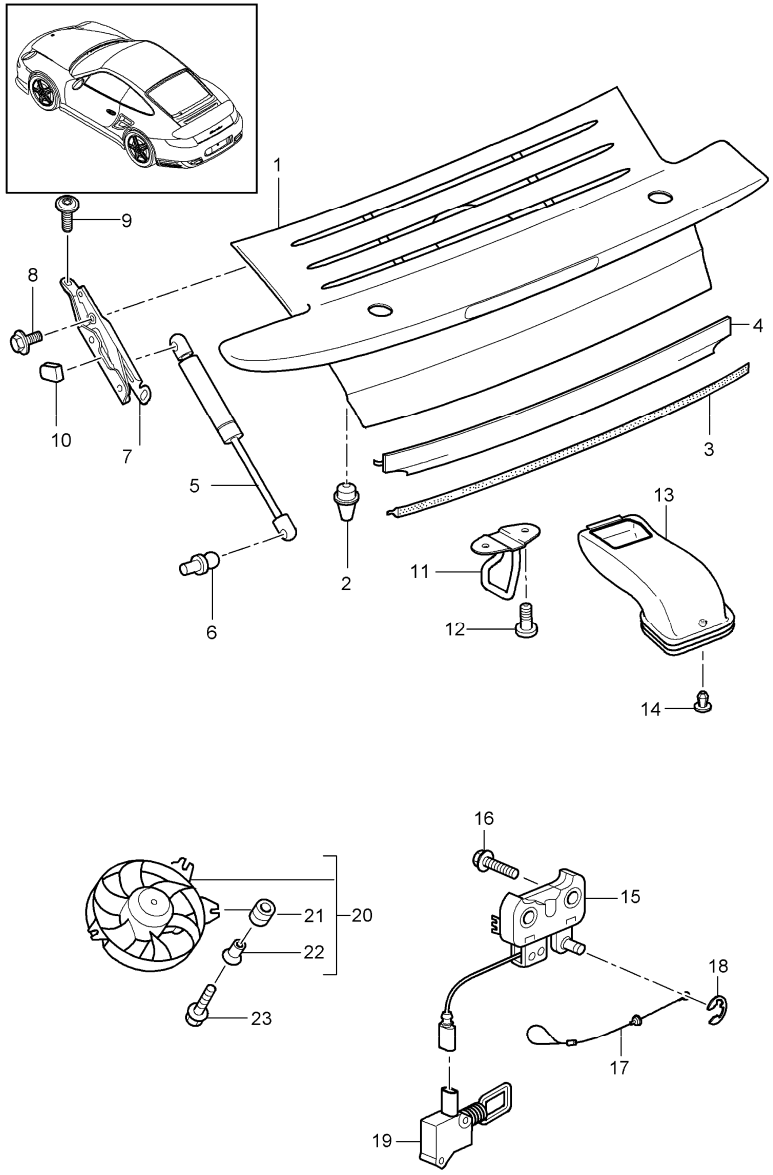

Pos	Part Number	Description	Remark	Qty	Model
		lid rear			
1	997 512 921 00	lid prime coated use also:		1	
-	000 043 204 38	sealing material		1	
2	996 512 987 00	adjusting screw lid		2	
3	997 512 611 01	gasket		1	
4	997 512 711 00	additional gasket lid rear		1	
5	996 512 551 03	gas-pressure spring		2	
6	999 167 051 03	ball pin		2	
7	997 512 151 03	hinge	/L	1	
(7)	997 512 152 01	hinge	/R	1	
8	900 378 214 01	hexagon-head bolt M 6 X 18		4	
9	900 075 466 09	combination screw M 6 X 16		6	
10	997 512 153 00	stop hinge		2	
11	997 512 213 01	lock upper part		1	
12	900 378 214 01	hexagon-head bolt M 6 X 18		2	
(13)	997 110 171 00	intake manifold air cleaner	/L	1	
13	997 110 172 00	intake manifold air cleaner	/R	1	
14	999 591 712 40	expansion rivet intake manifold 6,0 X 12,0		2	
15	997 512 053 00	lock lower part		1	
16	N 910 664 01	combination screw M 6 X 40		2	
17	997 512 521 00	cable emergency operation		1	

Pos	Part Number	Description	Remark	Qty	Model
18	900 116 002 02	lock washer		1	
19	997 624 118 00	actuator		1	
20	997 624 056 01	blower engine compartment		1	
21	999 703 451 40	rubber sleeve 9,0 X 14,0 X 1,5		3	
22	999 209 093 01	spacer sleeve 7,0 X 1,0 X 12		3	
23	999 073 417 01	oval-head screw M6 X 30		4	

Pos	Part Number	Description	Remark	Qty	Model

Model	Year	MG	SG	Illustration	Restrictions	UPD	20:23	06.02.2010	PORSCHE	PET	PORSCHE
997T2	2010	8	03	803-07		248	USA / CANADA				

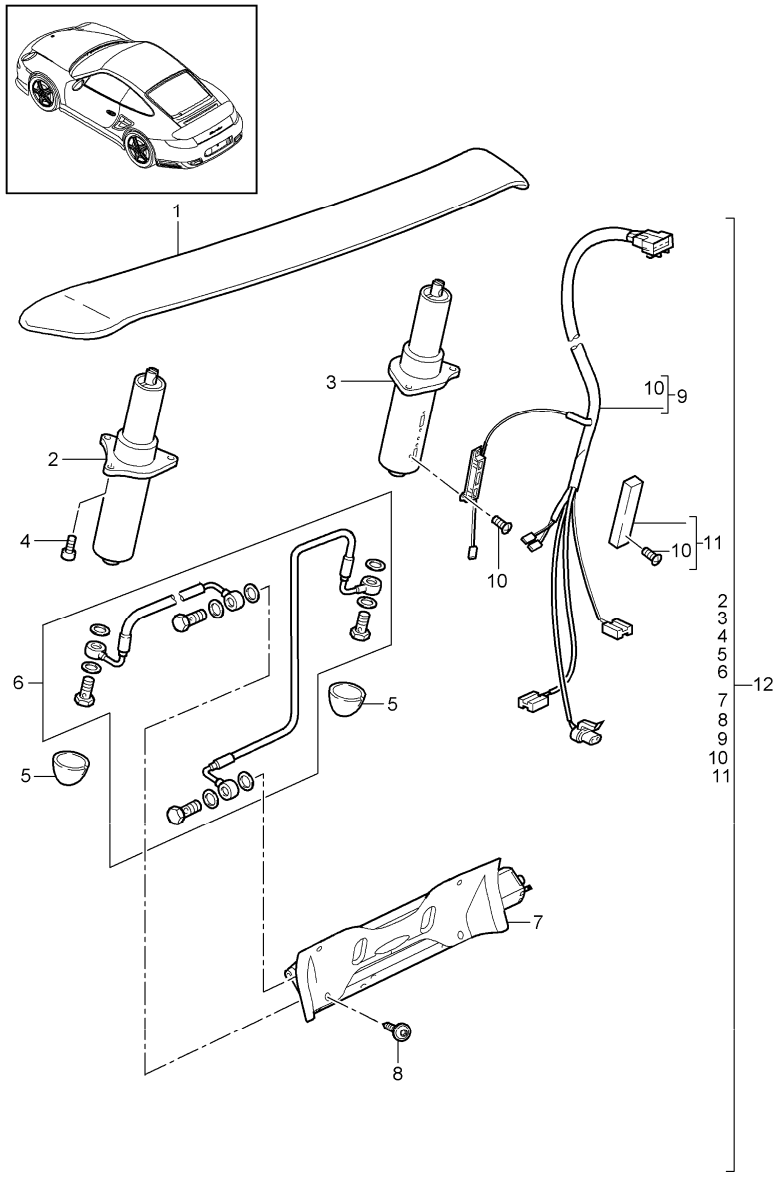

Pos	Part Number	Description	Remark	Qty	Model
		rear spoiler			
1	997 512 901 00	rear spoiler prime coated		1	
2	997 512 951 00	hinge	/L	1	COUPE
(2)	997 512 951 01	hinge	/L	1	CABRIO
3	997 512 952 00	hinge	/R	1	COUPE
(3)	997 512 952 01	hinge	/R	1	CABRIO
4	900 387 003 09	combination screw M6 X 25		6	
5	996 512 617 00	cap hinge		1	
6	997 512 915 00	hydraulic line set		1	
7	997 512 943 00	pump with support		1	
8	999 073 152 09	oval-head screw M6 X 18		4	
9	997 622 970 00	repair kit wiring harness with microswitch		1	COUPE
(9)	997 622 971 00	repair kit wiring harness with microswitch		1	CABRIO
10	999 919 002 02	oval-head screw 3,0 X 6,0		2	
11	997 613 248 00	cap microswitch		1	
12	997 512 111 00	driving mechanism		1	COUPE
12	997 512 111 01	driving mechanism complete		1	CABRIO

Model	Year	MG	SG	Illustration	Restrictions	UPD	20:23	06.02.2010
997T2	2010	8	04	804-00		248	USA / CANADA	

PORSCHE PET PORSCHE

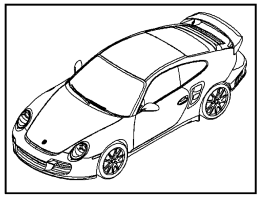

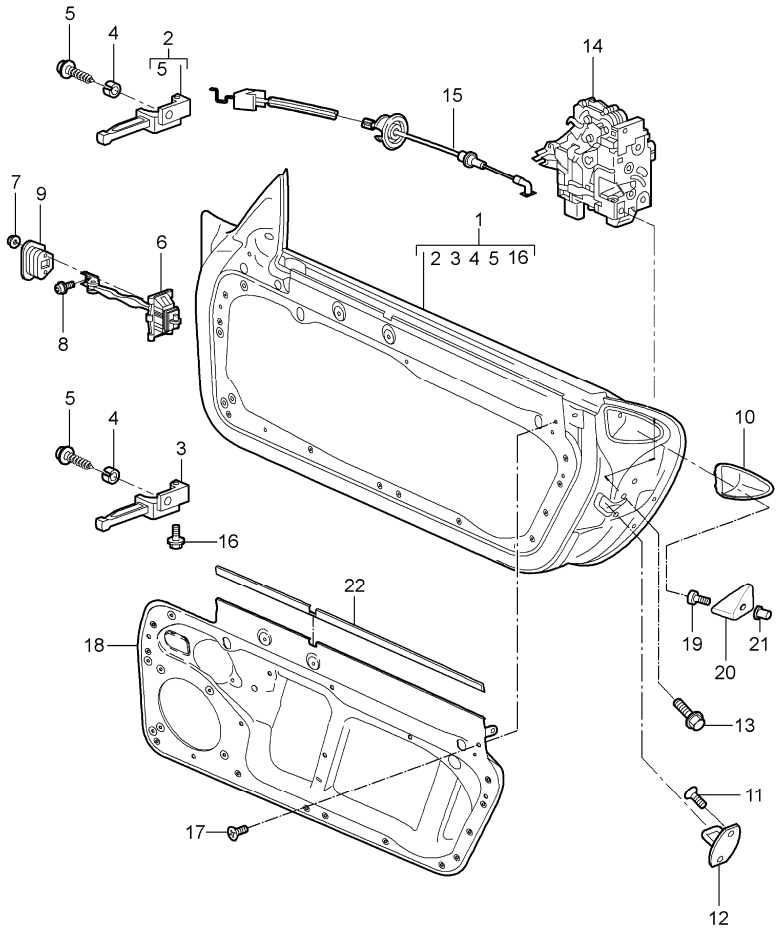

Pos	Part Number	Description	Remark	Qty	Model
		door in white installation parts door lock			
(1)	997 531 011 05	door in white	/L	1	
	GRV	prime coated			
1	997 531 012 05	door in white	/R	1	
	GRV	prime coated			
		use also:			
-	000 043 204 38	sealing material		1	
(2)	997 531 321 01	hinge	/L	1	
2	997 531 322 01	hinge upper	/R	1	
(3)	997 531 319 01	hinge	/L	1	
3	997 531 320 01	hinge lower	/R	1	
4	996 531 831 00	sleeve		4	
5	999 073 192 01	pan-head screw M 8 X 20		2	
6	997 537 151 01	door arrester		2	
7	999 084 212 03	hexagon nut M 6		4	
8	999 073 138 01	screw M 8 X 25		2	
9	996 537 751 00	seal		2	
(10)	997 537 331 00	support	/L	1	
	01C	satin black			
10	997 537 332 00	support	/R	1	
	01C	satin black			
11	N 910 174 01	countersunk-head screw M 8 X 22		4	
12	3C0 837 767 A	closing element		2	
13	WHT 000 439	combination screw M 8 X 20		2	

Pos	Part Number	Description	Remark	Qty	Model
(14)	3D1 837 015	door lock	/LL/L	1	I098
14	3D1 837 016	door lock	/LL/R	1	I098
(14)	3D1 837 015 C	door lock	/L	1	I072
(14)	3D1 837 016 C	door lock	/R	1	I072
(14)	3D1 837 015 C	door lock	/L	1	I553
(14)	3D1 837 016 C	door lock	/R	1	I553
15	997 537 319 01	bowden cable		2	
16	999 072 043 09	hexagon-head bolt M 6 X 12 micro-self-locking		2	
17	999 073 333 09	oval-head screw M 6 X 16		8	
(18)	987 537 201 01	inner panel	/L	1	
18	987 537 202 01	inner panel	/R	1	
19	900 119 072 00	pan-head screw M8 X 16		2	
(20)	997 537 333 00	support	/L	1	
	G2X	prime coated			
20	997 537 334 00	support side section	/R	1	
	G2X	prime coated			
21	999 500 121 02	blind rivet nut M8 / 0,8 - 3		2	
-	999 551 172 40	lining strap 25 x 1,3 x 730 for inner panel		2	

Pos	Part Number	Description	Remark	Qty	Model

Model	Year	MG	SG	Illustration	Restrictions	UPD	20:23	06.02.2010
997T2	2010	8	04	804-10		248	USA / CANADA	

PORSCHE PET PORSCHE

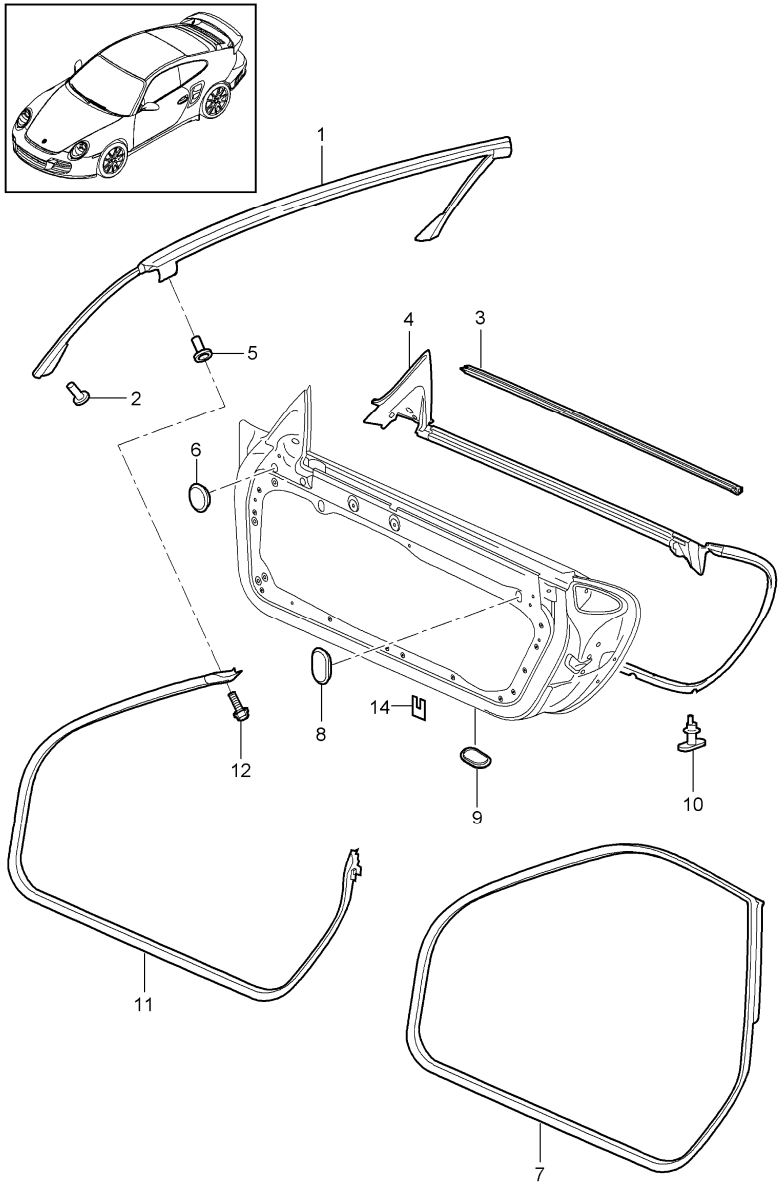

Pos	Part Number	Description	Remark	Qty	Model
		door seal gasket windscreen			
1	997 537 077 02	gasket windscreen		1	CABRIO
2	999 190 445 37	blind rivet A 4,0 X 7,9		36	CABRIO
3	997 537 085 03	gasket outer	/L	1	
(3)	997 537 086 03	gasket outer	/R	1	
4	997 537 531 08	gasket inner	/L	1	
(4)	997 537 532 08	gasket inner	/R	1	
5	999 500 098 02	blind rivet nut M5/0 - 3		1	
6	803 803 583 A	lid 20,0 X 30,0		2	
(7)	997 537 075 05	gasket	/L	1	COUPE
7	997 537 076 05	gasket	/R	1	COUPE
8	999 703 541 40	lid 20 X 28 X 1		4	
9	999 703 542 40	lid 23,8 X 38,7		8	
10	999 507 304 41	clip gasket outer 5,0 X 4,9		36	
11	997 537 075 07	gasket	/L	1	CABRIO
(11)	997 537 076 07	gasket	/R	1	CABRIO
12	900 075 362 01	combination screw M 5 X 16		2	CABRIO
13	999 500 098 02	blind rivet nut M 5/0 - 3		2	CABRIO
14	996 537 337 00	protective film		4	

Model	Year	MG	SG	Illustration	Restrictions	UPD	20:24	06.02.2010	PET
997T2	2010	8	04	804-20		248	USA / CANADA		

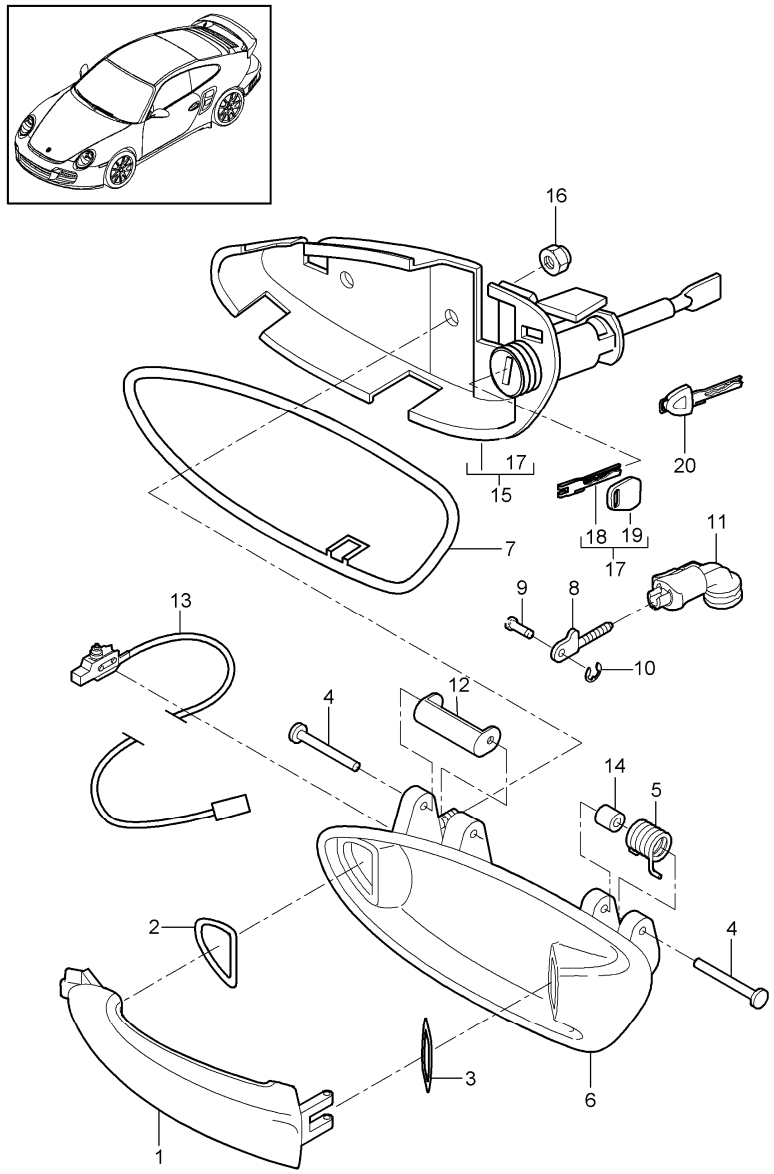

Pos	Part Number	Description	Remark	Qty	Model
		door handle			
1	997 537 613 01	outer door handle	/L	1	
(1)	997 537 614 01	outer door handle prime coated	/R	1	
2	997 537 623 00	buffer		2	
3	997 537 625 00	buffer		2	
4	997 537 621 00	axle		2	
5	997 537 611 00	return spring	/L	1	
(5)	997 537 612 00	return spring	/R	1	
(6)	997 537 646 01	handle liner	/LL/R	1	I098
	G2X	prime coated			
(6)	997 537 645 02	handle liner	/LL/L	1	I098/789
(6)	997 537 646 03	handle liner prime coated	/LL/R	1	I098/789
7	997 537 637 01	desk pad	/L	1	
(7)	997 537 638 01	desk pad	/R	1	
8	997 537 627 00	operating rod		2	
9	997 537 629 00	bolt		2	
10	997 537 641 00	lock washer		2	
11	997 537 445 03	connecting piece		2	
12	997 537 653 00	actuating lever	/L	1	
(12)	997 537 654 00	actuating lever	/R	1	
13	997 613 125 01	microswitch power windows		2	
14	997 537 633 00	bush		2	
15	997 538 963 00	support with lock cylinder	/LL/L	1	
(15)	997 538 963 01	support with lock cylinder	/LL/L	1	
(15)	997 538 963 02	support with lock cylinder	/LL/L	1	I625

Pos	Part Number	Description	Remark	Qty	Model
(15)	997 538 963 03	support with lock cylinder	/LL/L	1	I625
(15)	997 537 464 01	support without lock cylinder	/LL/R	1	
16	900 380 015 09	hexagon nut M 6		2	
17	997 538 931 00	replacement key with stipulated lock number state lock number		X	
18	997 538 531 00	blank key		X	
19	944 538 431 00	key cap		X	
20	955 538 916 00	emergency key with stipulated lock number state lock number Information available		X	
(20)	955 538 216 00	emergency key w/o stipulated lock number		X	

Model	Year	MG	SG	Illustration	Restrictions	UPD	20:24	06.02.2010
997T2	2010	8	04	804-30		248	USA / CANADA	

PORSCHE PET PORSCHE

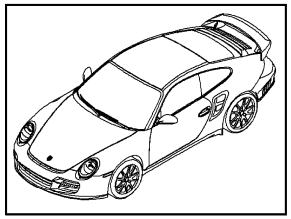

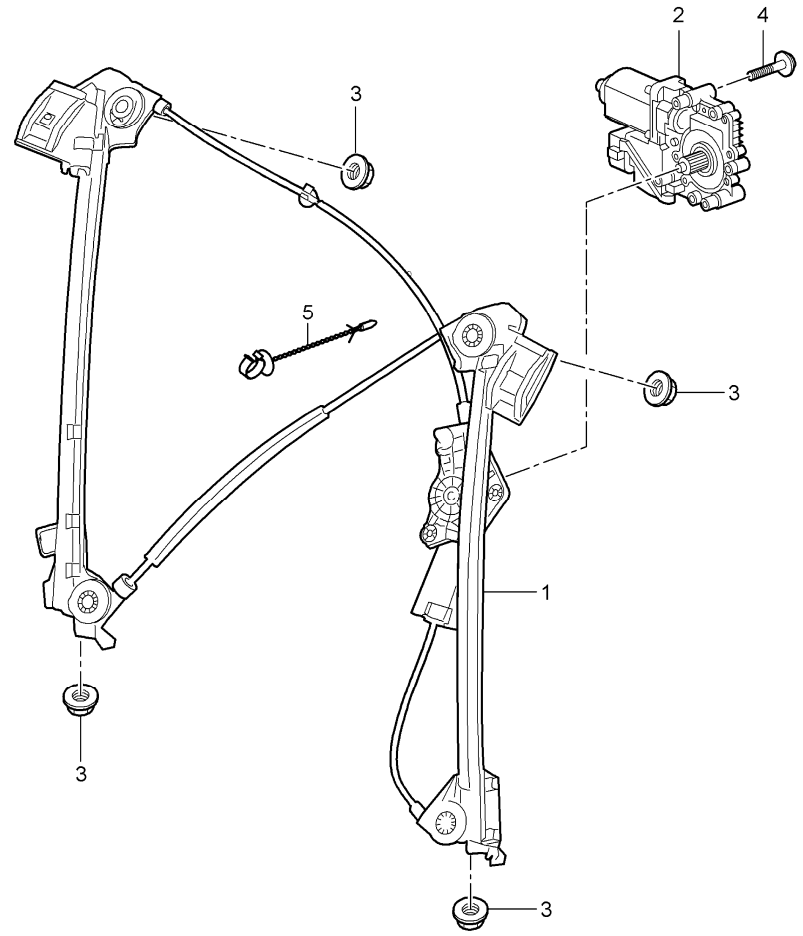

Pos	Part Number	Description	Remark	Qty	Model
		power windows			
1	997 542 075 01	power windows	/L	1	
(1)	997 542 076 01	power windows	/R	1	
2	997 624 181 06	electric motor	/L	1	
(2)	997 624 182 06	electric motor	/R	1	
3	900 380 015 09	hexagon nut M6		4	
4	999 919 209 09	oval-head screw M 5 X 22		3	
5	987 542 941 00	clip bowden cable power windows		1	

Model	Year	MG	SG	Illustration	Restrictions	UPD	20:24	06.02.2010
997T2	2010	8	05	805-00		248	USA / CANADA	

PORSCHE PET PORSCHE

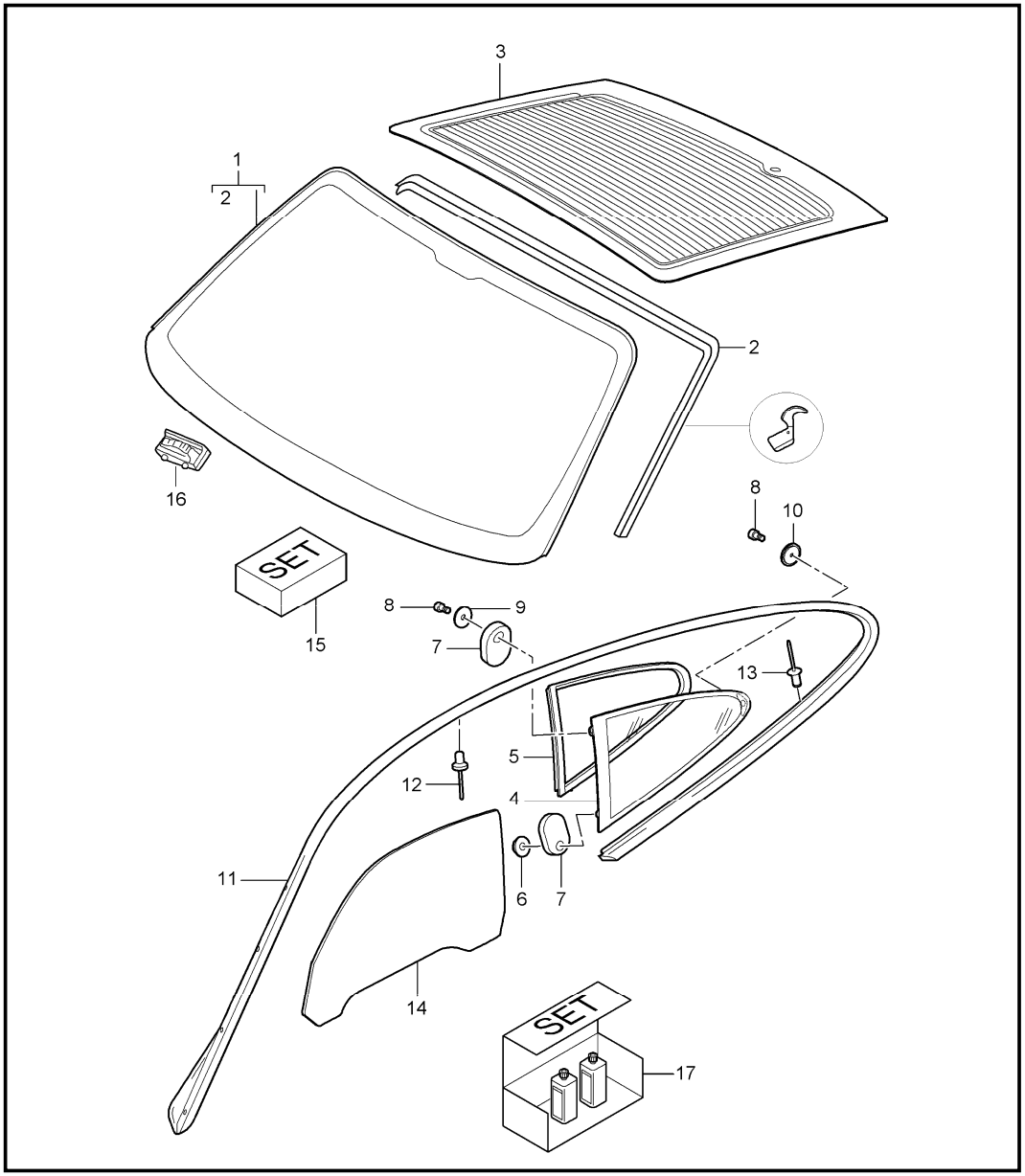

Pos	Part Number	Description	Remark	Qty	Model
		window glazing			
1	997 541 911 06	windscreen		1	Cabrio I440/568
		tinted			
(1)	997 541 911 07	windscreen		1	Cabrio I440/567
		tinted			
(1)	997 541 911 08	windscreen		1	Coupe I440/568
		tinted			
(1)	997 541 911 09	windscreen		1	Coupe I440/567
		tinted			
2	997 541 901 09	gasket windscreen		1	Cabrio
(2)	997 541 901 10	gasket windscreen		1	Coupe
3	997 545 911 01	rear window		1	I425
(3)	997 545 911 00	rear window		1	I426
-	997 545 901 00	gasket rear window		1	
4	997 543 111 05	rear window	/L	1	
(4)	997 543 112 05	rear window	/R	1	
5	996 543 325 00	sealing frame rear window	/L	1	
(5)	996 543 326 00	sealing frame rear window	/R	1	
6	999 084 210 01	hexagon nut M 8		1	
7	996 543 611 02	gasket		2	
8	999 218 011 03	pan-head screw M 6 X 12		2	
9	999 025 270 02	washer 6,4 X 30 X 1,5		1	
10	996 543 625 00	sealing washer		1	
11	997 537 481 00	roof frame seal	/L	1	
(11)	997 537 482 00	roof frame seal	/R	1	

Pos	Part Number	Description	Remark	Qty	Model
12	999 190 445 37	blind rivet 4,0 X 7,9		13	
13	999 190 450 37	blind rivet 4,0 X 6,3		7	
14	997 542 511 02	door window glass	/L	1	COUPE
(14)	997 542 512 02	door window glass	/R	1	COUPE
(14)	997 542 511 03	door window glass	/L	1	CABRIO
(14)	997 542 512 03	door window glass	/R	1	CABRIO
15	000 043 300 94	adhesive set TEROSTAT 8593		1	
16	999 507 576 41	support		2	
17	000 043 206 47	car care set side window see technical manual		X	

Model	Year	MG	SG	Illustration	Restrictions	UPD	20:24	06.02.2010
997T2	2010	8	05	805-05		248	USA / CANADA	

PORSCHE PET PORSCHE

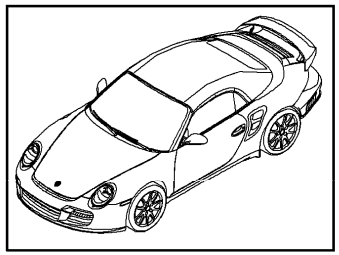

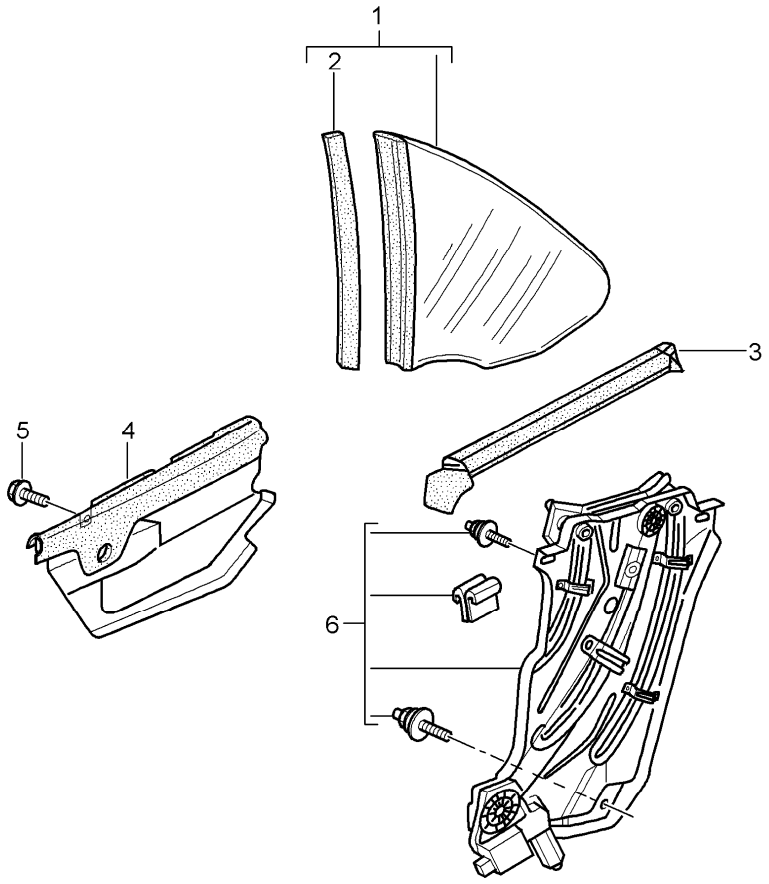

Pos	Part Number	Description	Remark	Qty	Model
		rear window			CABRIO
1	997 543 111 11	rear window	/L	1	
(1)	997 543 112 11	rear window	/R	1	
2	996 543 615 03	gasket	/L	1	
(2)	996 543 616 03	gasket	/R	1	
3	997 543 475 00	gasket outer	/L	1	
(3)	997 543 476 00	gasket outer	/R	1	
4	996 543 177 01	gasket inner	/L	1	
(4)	996 543 178 01	gasket inner	/R	1	
5	900 378 036 01	hexagon-head bolt M 6 X 12		4	
6	997 543 015 02	power windows Fa.Kuester	/L	1	
(6)	997 543 016 02	power windows Fa.Kuester	/R	1	

Model	Year	MG	SG	Illustration	Restrictions	UPD	20:24	06.02.2010	PORSCHE	PET	PORSCHE
997T2	2010	8	07	807-00		248	USA / CANADA				

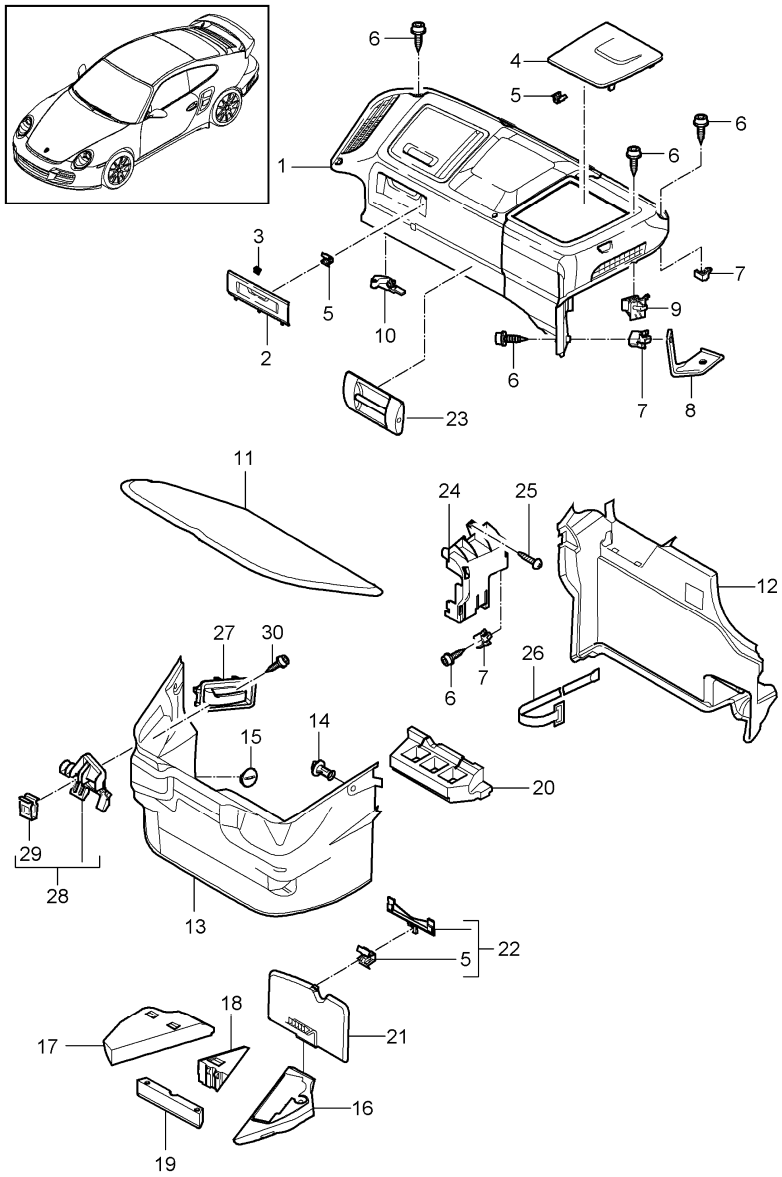

Pos	Part Number	Description	Remark	Qty	Model
		luggage compartment			
1	997 551 630 00	lining luggage compartment	/LL	1	I098
	FMU	black/black			
2	997 551 304 00	lid lining lower	/LL	1	I098
	02A	black			
3	997 551 817 00	support hinge	/LL	2	I098
4	997 551 309 00	lid brake booster	/LL	1	I098
	02A	black			
5	999 507 552 01	spring clamp 9 X 13/3,0		X	
6	999 073 048 02	tapping screw ST 3,5 X 13		X	
7	999 507 734 40	support ST 3,5		X	
8	997 551 771 02	support lining luggage compartment		1	
9	999 507 512 40	support ST 3,5		X	
10	997 551 772 02	support lining		1	
(11)	997 551 351 00	cover tool carpet		1	
	A31	black			
(12)	997 551 051 31	lining bulkhead carpet	/LL	1	Turbo I098/422
	A31	black			
(12)	997 551 051 32	lining bulkhead carpet	/RL	1	Turbo I099/422

Pos	Part Number	Description	Remark	Qty	Model
	A31	black			
(13)	997 551 045 18	lining		1	Turbo I553
		luggage compartment liner carpet			
	A31	black			
14	999 049 006 40	plastic nut T5 / 30 X 7,5		2	
15	997 551 807 00	cap nut		1	
(15)	999 703 455 41	lid		1	
16	997 551 401 00	foam part	/LL/L	1	TURBO I098
		tool			
17	997 551 408 00	foam part	/LL/R	1	TURBO I098
		luggage compartment liner			
18	997 551 405 00	foam part compressor rear		1	TURBO
19	997 551 403 00	foam part compressor front		1	TURBO
20	997 551 432 00	foam part bulkhead	/LL	1	I098
21	997 551 501 00	cover compressed air bottle	/LL	1	I098
	A31	black			
(21)	997 551 502 00	cover	/LL	1	Turbo I098/422
		compressed air bottle			
	A31	black			
22	997 551 415 00	adapter compressed air bottle		1	
22	997 551 415 00	adapter		1	Turbo I422
		compressed air bottle			
23	997 551 805 01	eye luggage compartment front		1	
	02A	black			
24	997 551 736 01	cover control unit		1	
25	999 073 061 02	tapping screw ST 4,8 X 16		X	
27	997 504 087 00	emergency operation luggage compartment		1	I553
28	997 551 706 00	support emergency operation luggage compartment		1	I553
29	999 591 489 09	speed nut ST 4,8		1	I553
30	999 073 061 02	tapping screw 4,8 X 16		1	I553

Model	Year	MG	SG	Illustration	Restrictions	UPD	20:25	06.02.2010	PET
997T2	2010	8	07	807-02		248	USA / CANADA		

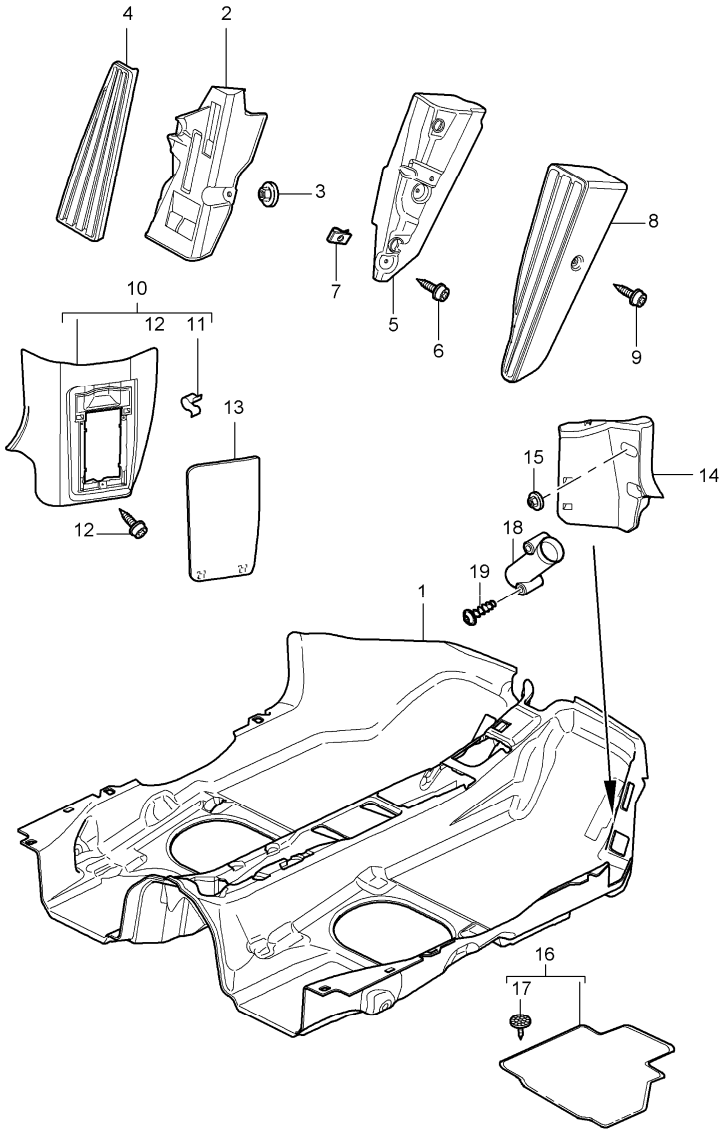

Pos	Part Number	Description	Remark	Qty	Model
		carpet linings			
1	997 551 011 08	carpet	/LL	1	TURBO/COUPE I098
		carpet			
	FLW	black			
	FLX	stone grey			
	FLY	sand beige			
	FLZ	sea blue			
	FMB	terracotta			
	FMC	cocoa			
	FMD	dark grey/natural			
	FME	brown/natural			
	FSV	carrera red			
(1)	997 551 011 12	carpet	/LL	1	CABRIO I098/680
		carpet			
	FLW	black			
	FLX	stone grey			
	FLY	sand beige			
	FLZ	sea blue			
	FMB	terracotta			
	FMC	cocoa			
	FMD	dark grey/natural			
	FME	brown/natural			
	FSV	carrera red			
--	997 551 813 01	protective film carpet	/LL	1	I098
2	997 551 211 01	foot support	/LL	1	
3	999 076 081 40	plastic nut T5/16 X 11,2 for mount foot support	/LL	2	

Pos	Part Number	Description	Remark	Qty	Model
4	997 551 611 00	cover foot support	/LL	1	I098
	01C	satin black			
(4)	997 551 986 00	cover foot support	/LL	1	IXXZ/098
10	997 551 101 00	lining	/LL	1	Turbo I098
		fusebox carpet			
	A10	black			
	B10	stone grey			
	T10	sand beige			
	E10	sea blue			
	M10	terracotta			
	R10	cocoa			
	D11	dark grey/natural			
	T11	brown/natural			
	N10	carrera red			
11	999 507 552 01	spring clamp 9,0 X 13/4,0		2	
12	999 919 161 09	oval-head screw 5,0 X 18 for mount lining fusebox		3	
13	997 551 621 00	lid lining fusebox	/LL	1	I098
	01C	satin black			
15	999 076 081 40	plastic nut T5/16 X 11,2 mount support carpet		2	
16		floor mats set see group TEG/8/07/06			
17	999 902 054 40	fastening plate for floor mats		4	

Model	Year	MG	SG	Illustration	Restrictions	UPD	20:25	06.02.2010	PORSCHE	PET	PORSCHE
997T2	2010	8	07	807-03		248	USA / CANADA				

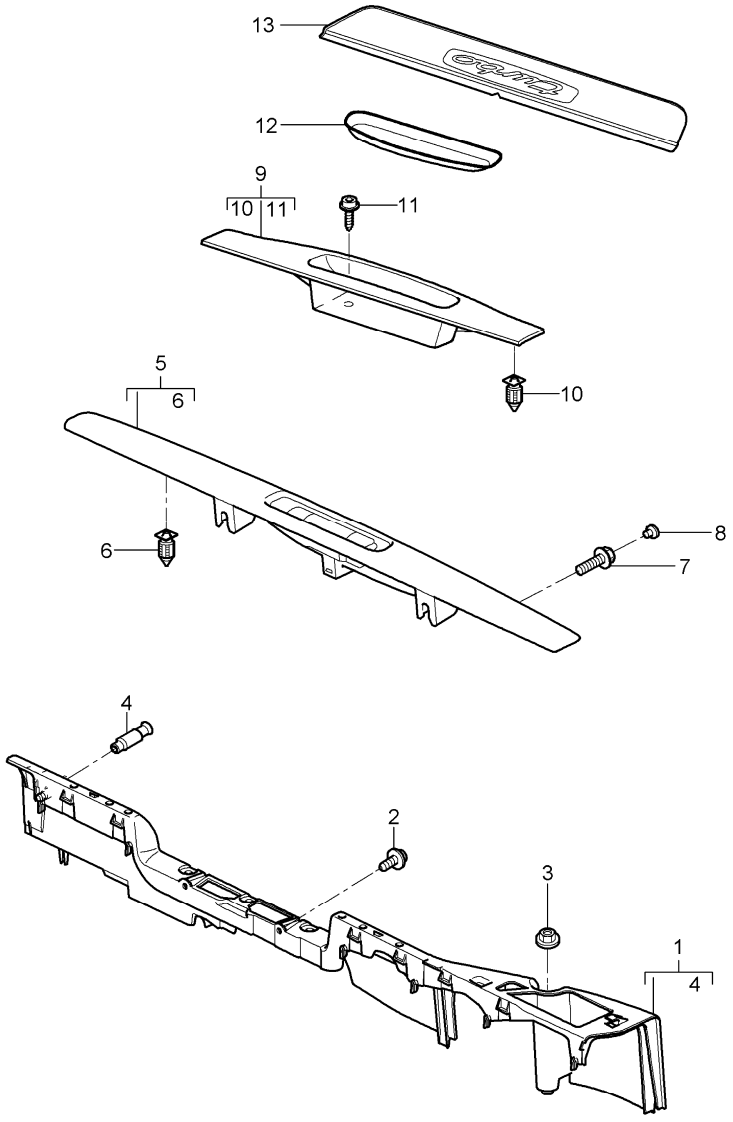

Pos	Part Number	Description	Remark	Qty	Model
		lining door sill			
1	997 551 619 02	support door sill	/L	1	
(1)	997 551 620 01	support door sill	/R	1	
2	900 143 082 01	tapping screw ST 6,3 X 13 for mount support door sill		4	
3	999 076 081 40	plastic nut T5 16 X 11,2 for mount support door sill		2	
4	996 551 873 00	locating peg for mount support door sill		2	
5	997 551 019 04	lining door sill driver's side	/LL	1	I098
	A03	black			
5	997 551 982 00	lining door sill driver's side leather	/LL	1	Turbo IXTG/098
	A11	black			
	5X6	stone grey			
	8G2	sand beige			
	3S9	sea blue			
	9S5	terracotta			
	9V6	cocoa			
	D12	dark grey/natural			
	T12	brown/natural			

Pos	Part Number	Description	Remark	Qty	Model
	N12	carrera red			
6	999 507 484 40	expander nut 9 X 22		6	
7	999 067 046 01	combination screw M 6 X 20		2	
8	999 703 443 40	stopper 8,0 X 11		2	
	01C	satin black			
9	997 551 120 01	lining door sill passenger's side		1	
	A03	black			
(9)	997 551 983 00	lining door sill passenger's side leather		1	Turbo IXTG
	A11	black			
	5X6	stone grey			
	8G2	sand beige			
	3S9	sea blue			
	9S5	terracotta			
	9V6	cocoa			
	D12	dark grey/natural			
	T12	brown/natural			
	N12	carrera red			
10	999 507 484 40	expander nut 9 X 22		6	
11	999 919 164 09	oval-head screw 5,0 X 12		1	
12	996 551 513 00	mat		1	
13	997 551 303 11	scuff plate lacquered		2	TURBO
	A03	black scuff plate exclusive without illumination see catalogue tequipment 8/07/06			
(13)	997 551 990 34	scuff plate set stainless steel with illumination	10-	1	TURBO IXXB
(13)	997 551 991 34	scuff plate set carbon with illumination	10-	1	TURBO IXXD

Model	Year	MG	SG	Illustration	Restrictions	UPD	20:25	06.02.2010	PORSCHE	PET	PORSCHE
997T2	2010	8	07	807-05		248	USA / CANADA				

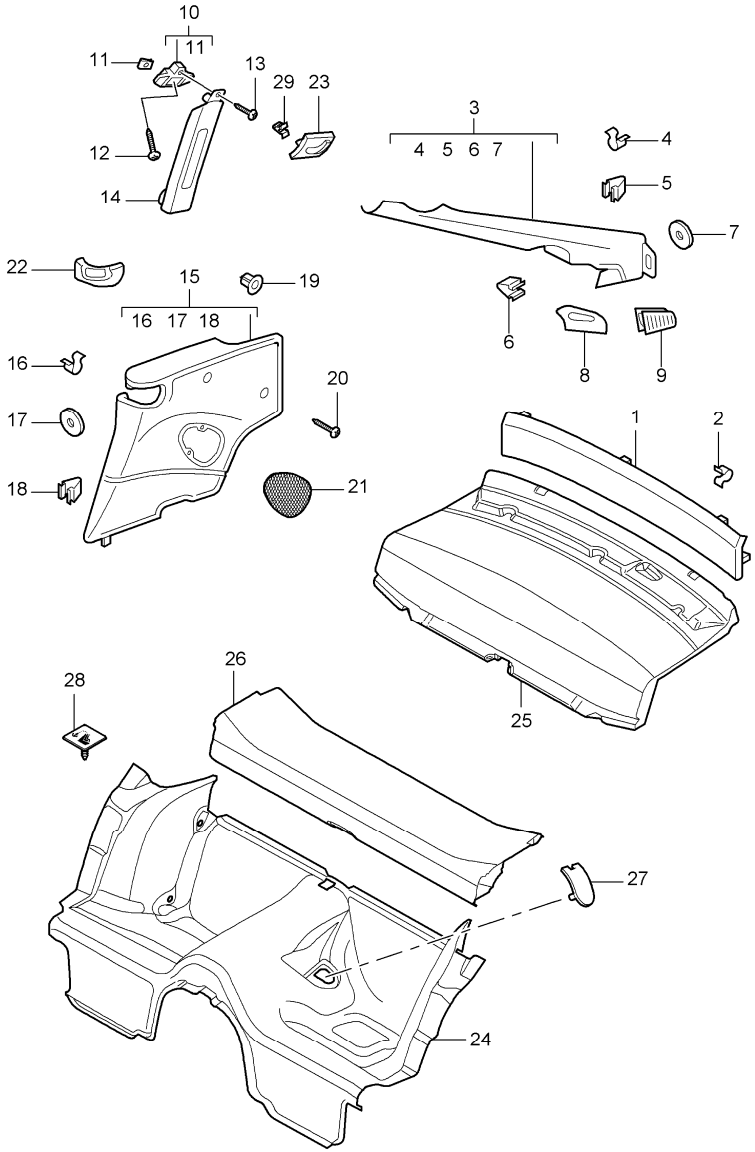

Pos	Part Number	Description	Remark	Qty	Model
		linings rear			COUPE
1	997 555 081 00	lining		1	Turbo I426
		rear wall carpet			
	A10	black			
	B10	stone grey			
	T10	sand beige			
	E10	sea blue			
	M10	terracotta			
	R10	cocoa			
	D11	dark grey/natural			
	T11	brown/natural			
	N10	carrera red			
(1)	997 555 081 01	lining		1	TURBO I425
		rear wall carpet			
	A10	black			
	B10	stone grey			
	T10	sand beige			
	E10	sea blue			
	M10	terracotta			
	R10	cocoa			
	D11	dark grey/natural			
	T11	brown/natural			
	N10	carrera red			
2	999 507 687 05	fixing clip 11,3		5	
3	997 555 187 01	lining	/L	1	Turbo I981
		c-pillar leather			

Pos	Part Number	Description	Remark	Qty	Model
	A11	black			
	5X6	stone grey			
	8G2	sand beige			
	3S9	sea blue			
	9S5	terracotta			
	9V6	cocoa			
	D12	dark grey/natural			
	T12	brown/natural			
	N12	carrera red			
(3)	997 555 188 01	lining c-pillar leather	/R	1	Turbo I981
	A11	black			
	5X6	stone grey			
	8G2	sand beige			
	3S9	sea blue			
	9S5	terracotta			
	9V6	cocoa			
	D12	dark grey/natural			
	T12	brown/natural			
	N12	carrera red			
4	999 507 533 02	clamp 8,0 X10,0/2,5		4	
5	999 507 479 01	clamp 2,5/09		6	
(5)	999 507 676 09	clamp 2,5/2,2 18,0		2	
6	999 651 307 01	cable clamp 18,0		2	
7	999 551 609 40	plastic washer 8,0 X 23 X 3,0		7	
8	996 555 545 01	rosette seat belt rear lacquered	/L	1	TURBO
	A03	black			
	5V7	stone grey			
	5Z1	sand beige			
	8W7	sea blue			
	8X8	terracotta			
	8P9	cocoa			
	T13	brown/natural			
	N23	carrera red			
(8)	996 555 546 01	rosette seat belt rear lacquered	/R	1	TURBO
	A03	black			
	5V7	stone grey			
	5Z1	sand beige			
	8W7	sea blue			
	8X8	terracotta			
	8P9	cocoa			
	T13	brown/natural			
	N23	carrera red			
9	996 555 645 00	grille bleeding lacquered	/L	1	Turbo
	A03	black			
	5V7	stone grey			
	5Z1	sand beige			
	8W7	sea blue			
	8X8	terracotta			
	8P9	cocoa			

Pos	Part Number	Description	Remark	Qty	Model
	T13	brown/natural			
	N23	carrera red			
(9)	996 555 646 00	grille bleeding lacquered	/R	1	Turbo
	A03	black			
	5V7	stone grey			
	5Z1	sand beige			
	8W7	sea blue			
	8X8	terracotta			
	8P9	cocoa			
	T13	brown/natural			
	N23	carrera red			
10	996 555 821 02	bracket coat hook	/L	1	
(10)	996 555 822 02	bracket coat hook	/R	1	
11	999 507 695 01	speed nut ST 4,8		2	
12	999 073 128 01	tapping screw 6,3 X 14 mount bracket coat hook		2	
(12)	999 025 268 01	washer 6,4 X 18 mount bracket coat hook		2	
13	999 073 060 02	tapping screw 4,8 X 13		2	
14	997 555 183 01	lining b-pillar leather	/L	1	Turbo I981
	A11	black			
	5X6	stone grey			
	8G2	sand beige			
	3S9	sea blue			
	9S5	terracotta			
	9V6	cocoa			
	D12	dark grey/natural			
	T12	brown/natural			
	N12	carrera red			
(14)	997 555 184 01	lining b-pillar leather	/R	1	Turbo I981
	A11	black			
	5X6	stone grey			
	8G2	sand beige			
	3S9	sea blue			
	9S5	terracotta			
	9V6	cocoa			
	D12	dark grey/natural			
	T12	brown/natural			
	N12	carrera red			
--	996 555 859 00	grommet b-pillar		2	
15	997 555 071 01	side trim panel leather	/L	1	TURBO I981
	FSA	black/grey			
	FSB	stone grey/stone grey			
	FSC	sand beige/sand beige			
	FSD	sea blue/grey			
	FSF	terracotta/terracotta			
	FSG	cocoa/cocoa			
	FSH	darkgrey natural/grey			

Pos	Part Number	Description	Remark	Qty	Model
	FSJ	brown nat./brown nat.			
	FSP	carrera red			
(15)	997 555 072 01	side trim panel	/R	1	TURBO I981
		leather			
	FSA	black/grey			
	FSB	stone grey/stone grey			
	FSC	sand beige/sand beige			
	FSD	sea blue/grey			
	FSF	terracotta/terracotta			
	FSG	cocoa/cocoa			
	FSH	darkgrey natural/grey			
	FSJ	brown nat./brown nat.			
	FSP	carrera red			
15	997 555 071 06	side trim panel	/L	1	TURBO I970
		two-colour			
	BCG	black/stone grey			
	BCH	black/sand beige			
	BCJ	black/terracotta			
(15)	997 555 072 06	side trim panel	/R	1	TURBO I970
		two-colour			
	BCG	black/stone grey			
	BCH	black/sand beige			
	BCJ	black/terracotta			
16	999 507 479 01	clamp 2,5/0,88		2	
17	999 551 609 40	plastic washer 8,0 X 23 X 3,0		2	
18	999 507 533 02	clamp 8.0 X 10 /2,5		1	
19	999 507 050 40	expander nut ST 4,2		2	
20	999 073 142 09	tapping screw ST 4,2 X 19		2	
21	997 555 049 00	loudspeaker grille side trim panel lacquered	/L	1	Turbo
	A03	black			
	5V7	stone grey			
	5Z1	sand beige			
	8W7	sea blue			
	8X8	terracotta			
	8P9	cocoa			
	T13	brown/natural			
	N23	carrera red			
(21)	997 555 049 01	loudspeaker grille	/L 10-	1	Turbo IXVT
		side trim panel leather			
	A11	black			
	5X6	stone grey			
	8G2	sand beige			
	3S9	sea blue			
	9S5	terracotta			
	9V6	cocoa			
	D12	dark grey/natural			
	T12	brown/natural			
	N12	carrera red			
(21)	997 555 050 00	loudspeaker grille side trim panel lacquered	/R	1	Turbo
	A03	black			
	5V7	stone grey			
	5Z1	sand beige			
	8W7	sea blue			

Pos	Part Number	Description	Remark	Qty	Model
	8X8	terracotta			
	8P9	cocoa			
	T13	brown/natural			
	N23	carrera red			
(21)	997 555 050 01	loudspeaker grille	/R 10-	1	Turbo IXVT
		side trim panel leather			
	A11	black			
	5X6	stone grey			
	8G2	sand beige			
	3S9	sea blue			
	9S5	terracotta			
	9V6	cocoa			
	D12	dark grey/natural			
	T12	brown/natural			
	N12	carrera red			
22	997 555 061 00	rosette seat belt lacquered	/L	1	Turbo
	A03	black			
	5V7	stone grey			
	5Z1	sand beige			
	8W7	sea blue			
	8X8	terracotta			
	8P9	cocoa			
	T13	brown/natural			
	N23	carrera red			
(22)	997 555 062 00	rosette seat belt lacquered	/R	1	Turbo
	A03	black			
	5V7	stone grey			
	5Z1	sand beige			
	8W7	sea blue			
	8X8	terracotta			
	8P9	cocoa			
	T13	brown/natural			
	N23	carrera red			
(22)	997 555 998 01	rosette seat belt leather	/L 10-	1	Turbo IXDU
	A11	black			
	5X6	stone grey			
	8G2	sand beige			
	3S9	sea blue			
	9S5	terracotta			
	9V6	cocoa			
	D12	dark grey/natural			
	T12	brown/natural			
	N12	carrera red			
(22)	997 555 998 02	rosette seat belt leather	/R 10-	1	Turbo IXDU
	A11	black			
	5X6	stone grey			
	8G2	sand beige			
	3S9	sea blue			
	9S5	terracotta			
	9V6	cocoa			
	D12	dark grey/natural			
	T12	brown/natural			

Pos	Part Number	Description	Remark	Qty	Model
	N12	carrera red			
(22)	997 555 998 05	rosette	/L 10-	1	Turbo IXCW
		seat belt aluminium			
	V04	galvano silver			
(22)	997 555 998 06	rosette	/R 10-	1	Turbo IXCW
		seat belt aluminium			
	V04	galvano silver			
(22)	997 555 998 09	rosette	/L 10-	1	Turbo IXDR
		seat belt			
	G2X	prime coated			
(22)	997 555 998 10	rosette	/R 10-	1	Turbo IXDR
		seat belt			
	G2X	prime coated			
(22)	997 555 998 21	rosette	/L 10-	1	Turbo IXJJ
		seat belt carbon			
	A35	black			
(22)	997 555 998 22	rosette	/R 10-	1	Turbo IXJJ
		seat belt carbon			
	A35	black			
23	997 555 573 00	coat hook lacquered	/L	1	Turbo
	A03	black			
	5V7	stone grey			
	5Z1	sand beige			
	8W7	sea blue			
	8X8	terracotta			
	8P9	cocoa			
	T13	brown/natural			
	N23	carrera red			
(23)	997 555 574 00	coat hook lacquered	/R	1	Turbo
	A03	black			
	5V7	stone grey			
	5Z1	sand beige			
	8W7	sea blue			
	8X8	terracotta			
	8P9	cocoa			
	T13	brown/natural			
	N23	carrera red			
24	997 551 017 02	adhesive carpet		1	TURBO I685
		seat well			
	A10	black			
	B10	stone grey			
	T10	sand beige			
	E10	sea blue			
	M10	terracotta			
	R10	cocoa			
	D11	dark grey/natural			
	T11	brown/natural			
	N10	carrera red			
(25)	997 551 031 22	adhesive carpet		1	TURBO I484/680
		rear wall carpet			
	A10	black			
	B10	stone grey			
	T10	sand beige			
	E10	sea blue			

Pos	Part Number	Description	Remark	Qty	Model
	M10	terracotta			
	R10	cocoa			
	D11	dark grey/natural			
	T11	brown/natural			
	N10	carrera red			
(25)	997 551 031 23	adhesive carpet		1	TURBO I113/680
		rear wall carpet			
	A10	black			
	B10	stone grey			
	T10	sand beige			
	E10	sea blue			
	M10	terracotta			
	R10	cocoa			
	D11	dark grey/natural			
	T11	brown/natural			
	N10	carrera red			
26	997 551 033 01	lining		1	Turbo I680
		control units carpet			
	A10	black			
	B10	stone grey			
	T10	sand beige			
	E10	sea blue			
	M10	terracotta			
	R10	cocoa			
	D11	dark grey/natural			
	T11	brown/natural			
	N10	carrera red			

Pos	Part Number	Description	Remark	Qty	Model
27	997 551 525 00	cover seat-belt buckle	/L	1	Turbo
	01C	black			
(27)	997 551 526 00	cover seat-belt buckle	/R	1	Turbo
	01C	black			
28	996 551 551 00	cover mount child car seat		2	I113
29	999 507 476 01	clamp 8,0 x 10 / 2,5 mount coat hook		2	

Model	Year	MG	SG	Illustration	Restrictions	UPD	20:25	06.02.2010
997T2	2010	8	07	807-07		248	USA / CANADA	

PORSCHE PET PORSCHE

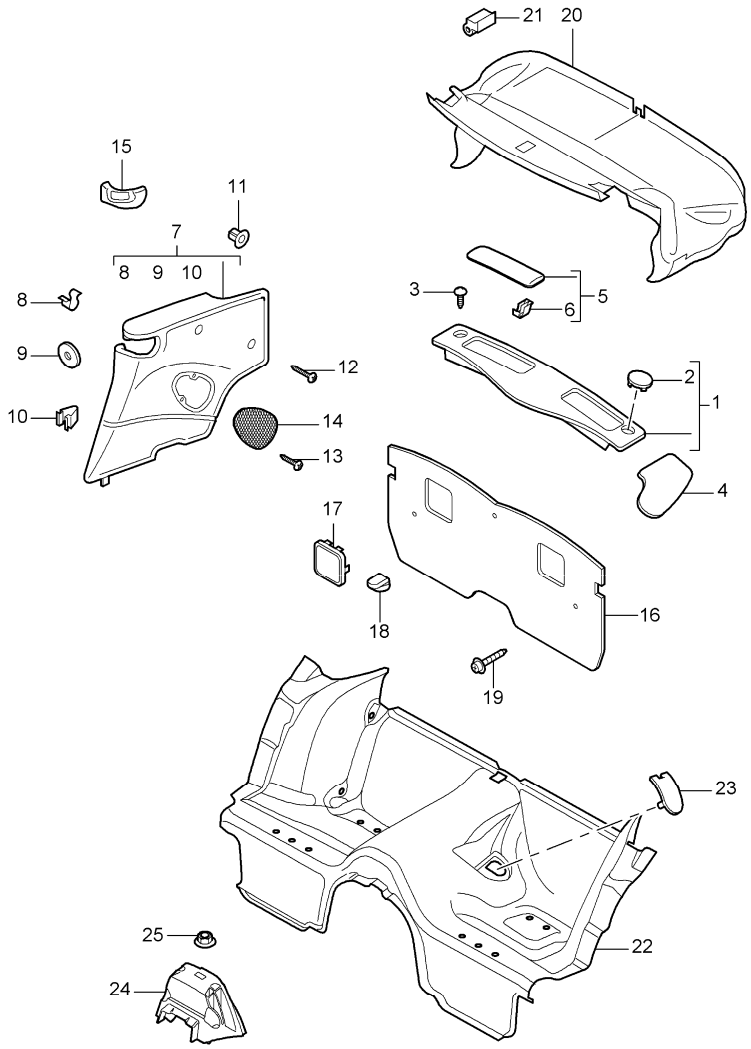

Pos	Part Number	Description	Remark	Qty	Model
		linings rear			CABRIO
1	996 555 083 04	cover convertible top cloth		1	
	EDK	black			
	FNX	stone grey			
	ERN	metropole blue			
	FNZ	brown			
2	996 555 457 00	lid hardtop mounting lacquered		2	
	A10	black			
	5V7	stone grey			
	G10	metropole blue			
	8P9	cocoa			
3	999 073 060 02	tapping screw 4,8 X 13 for mount cover convertible top		3	
4	996 555 263 03	flap convertible top cloth	/L	1	
	A07	black			
	C19	stone grey			
	G03	metropole blue			
	R18	brown			
(4)	996 555 264 03	flap convertible top cloth	/R	1	
	A07	black			
	C19	stone grey			
	G03	metropole blue			

Pos	Part Number	Description	Remark	Qty	Model
	R18	brown			
5	996 555 341 01	flap cover	/L	1	
	A07	black			
	C19	stone grey			
	G03	metropole blue			
	R18	brown			
(5)	996 555 342 01	flap cover	/R	1	
	A07	black			
	C19	stone grey			
	G03	metropole blue			
	R18	brown			
6	996 555 355 00	hinge outer		2	
(6)	996 555 356 00	hinge inner		2	
--	996 580 667 00	support		2	
--	999 591 489 02	speed nut 4,8		2	
--	999 073 060 02	tapping screw 4,8 X 13		3	
7	997 555 071 12	side trim panel leather when required order also: 999.551.173.40 see tpi group 8 Nr. 52	/L	1	I981
	FSA	black/grey			
	FSB	stone grey/stone grey			
	FSC	sand beige/sand beige			
	FSD	sea blue/grey			
	FSP	carrera red			
	FSF	terracotta/terracotta			
	FSG	cocoa/cocoa			
	FSH	darkgrey natural/grey			
	FSJ	brown nat./brown nat.			
(7)	997 555 072 12	side trim panel leather when required order also: 999.551.173.40 see tpi group 8 Nr. 52	/R	1	I981
	FSA	black/grey			
	FSB	stone grey/stone grey			
	FSC	sand beige/sand beige			
	FSD	sea blue/grey			
	FSP	carrera red			
	FSF	terracotta/terracotta			
	FSG	cocoa/cocoa			
	FSH	darkgrey natural/grey			
	FSJ	brown nat./brown nat.			
7	997 555 071 13	side trim panel two-colour when required order also: 999.551.173.40 see tpi group 8 Nr. 52	/L	1	I970
	BCK	black/stone grey			
	BCL	black/sand beige			
	BCM	black/terracotta			
(7)	997 555 072 13	side trim panel two-colour when required order also: 999.551.173.40 see tpi group 8 Nr. 52	/R	1	I970
	BCK	black/stone grey			
	BCL	black/sand beige			

Pos	Part Number	Description	Remark	Qty	Model
	BCM	black/terracotta			
--	999 551 173 40	felt strip 35 x 22 x 5		2	
8	999 507 676 09	clamp 2,5/2,2		1	
9	999 551 609 40	plastic washer 8,0 X 23 X3,0		1	
10	999 507 533 02	clamp 8,0 X 10 /2,5		2	
11	999 507 050 40	expander nut ST 4,2		2	
12	999 073 142 09	tapping screw ST 4,2 X 19		2	
13	999 073 048 02	tapping screw ST 3,5 X 13		2	
14	997 555 049 00	loudspeaker grille side trim panel lacquered	/L	1	
	A03	black			
	5V7	stone grey			
	5Z1	sand beige			
	8W7	sea blue			
	8X8	terracotta			
	8P9	cocoa			
	T13	brown/natural			
	N23	carrera red			
(14)	997 555 050 00	loudspeaker grille side trim panel lacquered	/R	1	
	A03	black			
	5V7	stone grey			
	5Z1	sand beige			
	8W7	sea blue			
	8X8	terracotta			
	8P9	cocoa			
	T13	brown/natural			
	N23	carrera red			
(14)	997 555 049 01	loudspeaker grille side trim panel leather	/L 10-	1	IXVT
	A11	black			
	5X6	stone grey			
	8G2	sand beige			
	3S9	sea blue			
	9S5	terracotta			
	9V6	cocoa			
	D12	dark grey/natural			
	T12	brown/natural			
	N12	carrera red			
(14)	997 555 050 01	loudspeaker grille side trim panel leather	/R 10-	1	IXVT
	A11	black			
	5X6	stone grey			
	8G2	sand beige			
	3S9	sea blue			
	9S5	terracotta			
	9V6	cocoa			
	D12	dark grey/natural			
	T12	brown/natural			
	N12	carrera red			
(15)	997 555 671 01	rosette seat belt	/L	1	
	A03	black			
	5V7	stone grey			

Pos	Part Number	Description	Remark	Qty	Model
	5Z1	sand beige			
	8W7	sea blue			
	N23	carrera red			
	8X8	terracotta			
	8P9	cocoa			
	T13	brown/natural			
(15)	997 555 672 01	rosette seat belt	/R	1	
	A03	black			
	5V7	stone grey			
	5Z1	sand beige			
	8W7	sea blue			
	N23	carrera red			
	8X8	terracotta			
	8P9	cocoa			
	T13	brown/natural			
(15)	997 555 998 03	rosette seat belt leather	/L 10-	1	IXDU
	A11	black			
	5X6	stone grey			
	8G2	sand beige			
	3S9	sea blue			
	9S5	terracotta			
	9V6	cocoa			
	D12	dark grey/natural			
	T12	brown/natural			
	N12	carrera red			
(15)	997 555 998 04	rosette seat belt leather	/R 10-	1	IXDU
	A11	black			
	5X6	stone grey			
	8G2	sand beige			
	3S9	sea blue			
	9S5	terracotta			
	9V6	cocoa			
	D12	dark grey/natural			
	T12	brown/natural			
	N12	carrera red			
(15)	997 555 998 07	rosette seat belt aluminium	/L 10-	1	IXCW
	V04	galvano silver			
(15)	997 555 998 08	rosette seat belt aluminium	/R 10-	1	IXCW
	V04	galvano silver			
(15)	997 555 998 11	rosette seat belt	/L 10-	1	IXDR
	G2X	prime coated			
(15)	997 555 998 12	rosette seat belt	/R 10-	1	IXDR
	G2X	prime coated			
(15)	997 555 998 23	rosette seat belt carbon	/L 10-	1	IXJJ
	A35	black			
(15)	997 555 998 24	rosette seat belt carbon	/R 10-	1	IXJJ
	A35	black			
(16)	996 555 281 06	back wall lining carpet		1	
	A10	black			

Pos	Part Number	Description	Remark	Qty	Model
	B10	stone grey			
	E10	sea blue			
	N10	carrera red			
	M10	terracotta			
	R10	cocoa			
	D11	dark grey/natural			
	T11	brown/natural			
18	996 555 789 00	base wind deflector		1	
	01C	satin black			
19	999 073 062 02	tapping screw 4,8 X 12		2	
20	997 551 035 01	lining convertible top frame carpet		1	
	B04	dark grey			
21	999 703 432 40	stopper for mount lining convertible top frame		X	
22	997 551 017 03	adhesive carpet seat well carpet		1	
	A10	black			
	B10	stone grey			
	T10	sand beige			
	E10	sea blue			
	N10	carrera red			
	M10	terracotta			
	R10	cocoa			
	D11	dark grey/natural			
	T11	brown/natural			
(23)	997 551 525 00	cover seat-belt buckle	/L	1	
	01C	satin black			
23	997 551 526 00	cover seat-belt buckle	/R	1	
	01C	satin black			
24	997 551 221 00	support seat well		1	
25	999 076 081 40	plastic nut T5 16 X 11,2		2	

Model	Year	MG	SG	Illustration	Restrictions	UPD	20:25	06.02.2010	PORSCHE	PET	PORSCHE
997T2	2010	8	07	807-08		248	USA / CANADA				

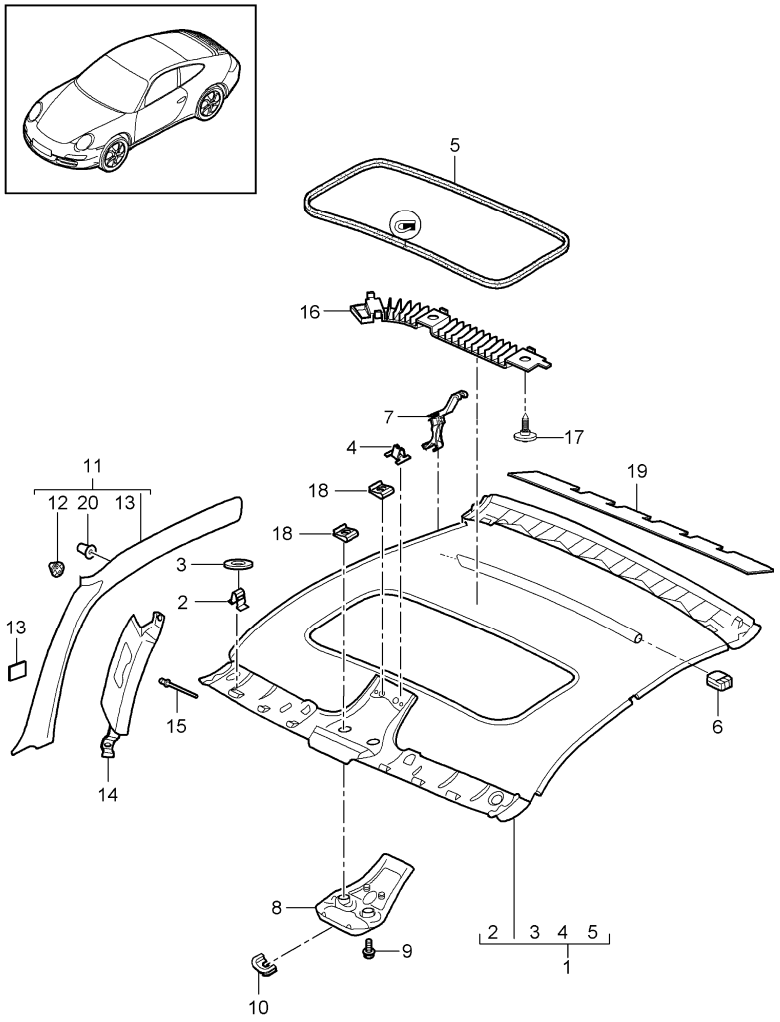

Pos	Part Number	Description	Remark	Qty	Model
		rooflining a-pillar			COUPE
1	997 555 091 02	rooflining		1	Turbo I652
		alcantara			
	A14	black			
	B14	stone grey			
	T44	sand beige			
	G14	metropole blue			
(1)	997 555 091 03	rooflining		1	TURBO I650
		alcantara			
	A14	black			
	B14	stone grey			
	T44	sand beige			
	G14	metropole blue			
(1)	997 555 980 02	rooflining		1	Turbo IXMA/652
	A11	black			
	5X6	stone grey			
	8G2	sand beige			
	3S9	sea blue			
	9S5	terracotta			
	9V6	cocoa			
	D12	dark grey/natural			
	T12	brown/natural			
	N12	carrera red			
(1)	997 555 980 03	rooflining		1	TURBO IXMA/650
	A11	black			
	5X6	stone grey			
	8G2	sand beige			

Pos	Part Number	Description	Remark	Qty	Model
	3S9	sea blue			
	9S5	terracotta			
	9V6	cocoa			
	D12	dark grey/natural			
	T12	brown/natural			
	N12	carrera red			
2	999 507 479 01	clamp 2,5/0,9		6	
3	999 551 609 40	plastic washer 8,0 X 23 X 3,0		6	
4	999 507 533 02	clamp 8 X 10/2,5		2	TURBO I650
5	996 564 231 02	piping		1	TURBO I650
6	997 555 823 00	support transverse strut		2	TURBO I650
7	996 555 691 02	clip mount rooflining		8	
(8)	996 555 557 09	cover interior light		1	TURBO I650
	A03	black			
	5V7	stone grey			
	5Z1	sand beige			
	8W7	sea blue			
8	996 555 557 11	cover interior light		1	Turbo I652
	A03	black			
	5V7	stone grey			
	5Z1	sand beige			
	8W7	sea blue			

Pos	Part Number	Description	Remark	Qty	Model
(8)	996 555 993 02	cover interior light leather		1	TURBO IXZD/650
	A11	black			
	5X6	stone grey			
	8G2	sand beige			
	3S9	sea blue			
	9S5	terracotta			
	9V6	cocoa			
	D12	dark grey/natural			
	T12	brown/natural			
	N12	carrera red			
(8)	996 555 993 03	cover interior light leather		1	Turbo IXZD/652
	A11	black			
	5X6	stone grey			
	8G2	sand beige			
	3S9	sea blue			
	9S5	terracotta			
	9V6	cocoa			
	D12	dark grey/natural			
	T12	brown/natural			
	N12	carrera red			
9	999 073 061 02	tapping screw 4,8 X 16		X	
10	996 555 619 00	grommet wiring harness rain sensor		1	
(11)	997 555 181 05	lining a-pillar leather	/L	1	Turbo I981

Pos	Part Number	Description	Remark	Qty	Model
	A11	black			
	5X6	stone grey			
	8G2	sand beige			
	3S9	sea blue			
	9S5	terracotta			
	9V6	cocoa			
	D12	dark grey/natural			
	T12	brown/natural			
	N12	carrera red			
(11)	997 555 182 05	lining a-pillar leather	/R	1	Turbo I981
	A11	black			
	5X6	stone grey			
	8G2	sand beige			
	3S9	sea blue			
	9S5	terracotta			
	9V6	cocoa			
	D12	dark grey/natural			
	T12	brown/natural			
	N12	carrera red			
12	999 507 681 01	clamp 2,5/3,0		5	
(12)	999 507 839 01	clamp 3,5		2	
(12)	999 507 047 09	clamp 3,6		3	
13	999 551 134 40	adhesive tape 20 X 65		5	
(14)	997 555 291 00	deformation element a-pillar	/L	1	I072/553
(14)	997 555 292 00	deformation element a-pillar	/R	1	I072/553
15	999 190 184 01	blind rivet 4,0 X 8,5		8	
(16)	997 555 689 02	deformation element roof	/L	1	TURBO I072/553/650
16	997 555 690 02	deformation element roof	/R	1	TURBO I072/553/650
17	999 073 366 02	oval-head screw M 6 X30 for mount deformation element roof		4	TURBO
18	999 591 348 01	speed nut St 4,8		X	
19	997 556 603 00	sound absorber tensioner rear		1	
20	997 555 857 00	grommet a-pillar		X	

Model	Year	MG	SG	Illustration	Restrictions	UPD	20:26	06.02.2010
997T2	2010	8	07	807-09		248	USA / CANADA	

PORSCHE PET PORSCHE

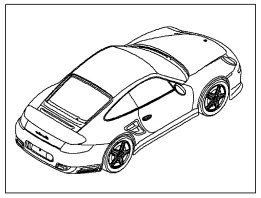

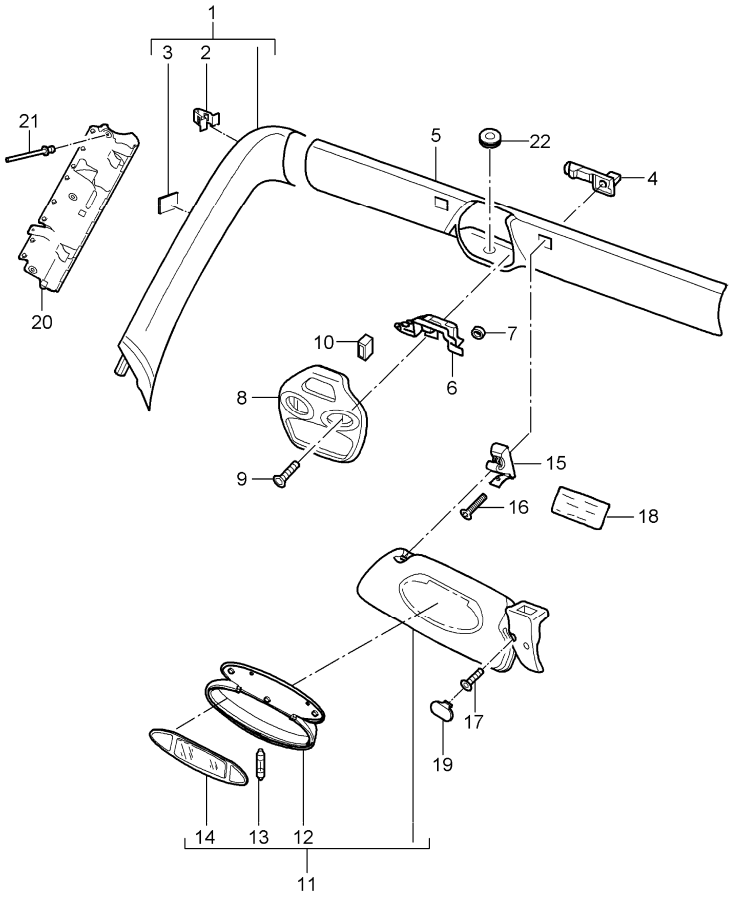

Pos	Part Number	Description	Remark	Qty	Model
		a-pillar windscreen frame sun visors			CABRIO CABRIO COUPE/CABRIO
1	997 555 181 07	lining	/L	1	CABRIO I981
		a-pillar leather			
	A11	black			
	5X6	stone grey			
	8G2	sand beige			
	3S9	sea blue			
	9S5	terracotta			
	9V6	cocoa			
	D12	dark grey/natural			
	T12	brown/natural			
	N12	carrera red			
(1)	997 555 182 07	lining	/R	1	CABRIO I981
		a-pillar leather			
	A11	black			
	5X6	stone grey			
	8G2	sand beige			
	3S9	sea blue			
	9S5	terracotta			
	9V6	cocoa			
	D12	dark grey/natural			
	T12	brown/natural			
	N12	carrera red			
2	999 507 047 09	clamp 3,6		2	
3	999 551 134 40	adhesive tape 20 X 65		2	

Pos	Part Number	Description	Remark	Qty	Model
4	986 731 541 01	plate for sun visors		2	
5	997 555 059 01	lining		1	CABRIO I981
		windscreen frame part leather			
	A11	black			
	5X6	stone grey			
	8G2	sand beige			
	3S9	sea blue			
	9S5	terracotta			
	9V6	cocoa			
	D12	dark grey/natural			
	T12	brown/natural			
	N12	carrera red			
6	996 613 795 01	microswitch		1	CABRIO
7	999 507 534 02	clamping washer 2,5		2	CABRIO
8	996 561 635 00	cover interior light lacquered		1	CABRIO
	A09	rally black			
--	996 561 613 00	cover		1	CABRIO
	01C	satin black			
9	999 073 166 09	countersunk-head screw M6 X 25		2	CABRIO
10	996 561 609 00	cap		1	CABRIO
(11)	997 731 031 27	sun visor	/L	1	Turbo/Coupe I553
		leatherette			
	A12	black			
	8W4	stone grey			
	7E3	sand beige			
	8Z5	sea blue			
(11)	997 731 032 27	sun visor	/R	1	TURBO/COUPE I553
		leatherette			
	A12	black			
	8W4	stone grey			
	7E3	sand beige			
	8Z5	sea blue			
(11)	997 731 981 19	sun visor	/L	1	TURBO/COUPE IXMP/553
		leather			
	A11	black			
	5X6	stone grey			
	8G2	sand beige			
	3S9	sea blue			
	9S5	terracotta			
	9V6	cocoa			
	T12	brown/natural			
	D12	dark grey/natural			
	N12	carrera red			
(11)	997 731 982 19	sun visor	/R	1	TURBO/COUPE IXMP/553
		leather			
	A11	black			
	5X6	stone grey			
	8G2	sand beige			
	3S9	sea blue			
	9S5	terracotta			
	9V6	cocoa			
	T12	brown/natural			
	D12	dark grey/natural			
	N12	carrera red			

Pos	Part Number	Description	Remark	Qty	Model
(11)	997 731 031 28	sun visor	/L	1	CABRIO I553
		leatherette			
	A12	black			
	8W4	stone grey			
	7E3	sand beige			
	8Z5	sea blue			
(11)	997 731 032 28	sun visor	/R	1	CABRIO I553
		leatherette			
	A12	black			
	8W4	stone grey			
	7E3	sand beige			
	8Z5	sea blue			
(11)	997 731 981 20	sun visor	/L	1	CABRIO IXMP/553
		leather			
	A11	black			
	5X6	stone grey			
	8G2	sand beige			
	3S9	sea blue			
	9S5	terracotta			
	9V6	cocoa			
	D12	dark grey/natural			
	T12	brown/natural			
	N12	carrera red			
(11)	997 731 982 20	sun visor	/R	1	CABRIO IXMP/553
		leather			
	A11	black			
	5X6	stone grey			
	8G2	sand beige			
	3S9	sea blue			

Pos	Part Number	Description	Remark	Qty	Model
	9S5	terracotta			
	9V6	cocoa			
	D12	dark grey/natural			
	T12	brown/natural			
	N12	carrera red			
12	996 731 903 00	mirror housing with illumination		1	
	01C	satin black			
13	999 631 147 90	bulb 3 W		4	
14	996 731 531 01	mirror glass with frame		2	
	01C	satin black			
15	996 731 341 00	support sun visor	/L	1	
	01C	satin black			
(15)	996 731 342 00	support sun visor	/R	1	
	01C	satin black			
16	999 919 120 09	oval-head screw M 4 x 18		1	
17	999 073 166 09	countersunk-head screw M 6 X 25		42	CABRIO
(17)	999 073 326 09	oval-head screw M 5 X 10		2	COUPE
(17)	999 500 093 02	nut M5		2	COUPE
(18)	997 701 401 07	indication sticker convertible top control english		1	CABRIO I130
(18)	997 701 401 08	indication sticker convertible top control french		1	CABRIO I113/126

Pos	Part Number	Description	Remark	Qty	Model
(18)	997 701 401 10	indication sticker		1	CABRIO I119
		convertible top control spanish			
19	996 561 613 00	cover mounting		1	CABRIO
	01C	satin black			
20	997 555 291 01	deformation element	/L	1	CABRIO I072/553
		a-pillar			
(20)	997 555 292 01	deformation element	/R	1	CABRIO I072/553
		a-pillar			
21	999 190 184 01	blind rivet		4	
23	996 555 619 00	grommet wiring harness rain sensor		1	

Pos	Part Number	Description	Remark	Qty	Model

Model	Year	MG	SG	Illustration	Restrictions	UPD	20:26	06.02.2010
997T2	2010	8	07	807-10		248	USA / CANADA	

PORSCHE PET PORSCHE

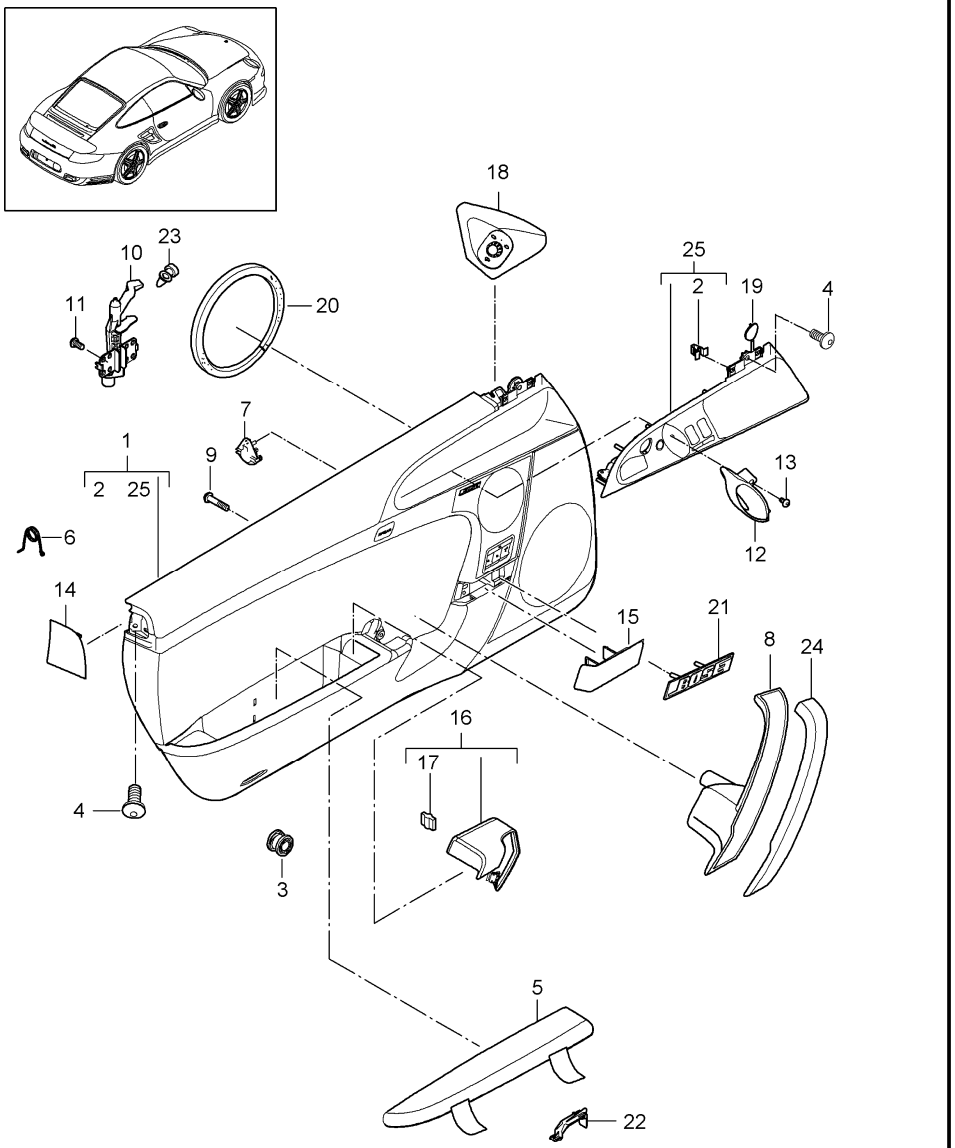

Pos	Part Number	Description	Remark	Qty	Model
		door trim panel accessories			
1	997 555 201 09	door trim panel	/LL/L	1	TURBO/COUPE -IXVT/I098/ I680/981
		leather			
	FSA	black			
	FSB	stone grey			
	FSC	sand beige			
	FSD	sea blue			
	FSF	terracotta			
	FSG	cocoa			
	FSH	dark grey/natural			
	FSJ	brown/natural			
	BCD	black/stone grey			
	BCE	black/sand beige			
	BCF	black/terracotta			
	FSP	carrera red			
1	997 555 201 11	door trim panel	/LL/L	1	TURBO/COUPE -IXVT/I537/ I680/981
		leather			
	FSA	black			
	FSB	stone grey			
	FSC	sand beige			
	FSD	sea blue			
	FSF	terracotta			
	FSG	cocoa			
	FSH	dark grey/natural			
	FSJ	brown/natural			
	BCD	black/stone grey			
	BCE	black/sand beige			

Pos	Part Number	Description	Remark	Qty	Model
	BCF	black/terracotta			
	FSP	carrera red			
(1)	997 555 201 21	door trim panel	/LL/L	1	CABRIO -IXVT/I098/ I680/981
		leather			
	FSA	black			
	FSB	stone grey			
	FSC	sand beige			
	FSD	sea blue			
	FSF	terracotta			
	FSG	cocoa			
	FSH	dark grey/natural			
	FSJ	brown/natural			
	BCD	black/stone grey			
	BCE	black/sand beige			
	BCF	black/terracotta			
	FSP	carrera red			
(1)	997 555 201 23	door trim panel	/LL/L	1	CABRIO -IXVT/I537/ I680/981
		leather			
	FSA	black			
	FSB	stone grey			
	FSC	sand beige			
	FSD	sea blue			
	FSF	terracotta			
	FSG	cocoa			
	FSH	dark grey/natural			
	FSJ	brown/natural			
	BCD	black/stone grey			
	BCE	black/sand beige			

Pos	Part Number	Description	Remark	Qty	Model
	BCF	black/terracotta			
	FSP	carrera red			
(1)	997 555 202 29	door trim panel	/LL/R	1	TURBO/COUPE -IXVT/I098/ I680/981
		leather			
	FSA	black			
	FSB	stone grey			
	FSC	sand beige			
	FSD	sea blue			
	FSF	terracotta			
	FSG	cocoa			
	FSH	dark grey/natural			
	FSJ	brown/natural			
	BCD	black/stone grey			
	BCE	black/sand beige			
	BCF	black/terracotta			
	FSP	carrera red			
(1)	997 555 202 29	door trim panel	/LL/R	1	CABRIO -IXVT/I098/ I680/981
		leather			
	FSA	black			
	FSB	stone grey			
	FSC	sand beige			
	FSD	sea blue			
	FSF	terracotta			
	FSG	cocoa			
	FSH	dark grey/natural			
	FSJ	brown/natural			
	BCD	black/stone grey			
	BCE	black/sand beige			

Pos	Part Number	Description	Remark	Qty	Model
	BCF	black/terracotta			
	FSP	carrera red			
(1)	997 555 981 02	door trim panel	/LL/L 10-	1	TURBO/COUPE IXVT/098/680 I981
		leather			
	A11	black			
	5X6	stone grey			
	8G2	sand beige			
	3S9	sea blue			
	9S5	terracotta			
	9V6	cocoa			
	BCD	black/stone grey			
	BCE	black/sand beige			
	BCF	black/terracotta			
	D12	dark grey/natural			
	T12	brown/natural			
	N12	carrera red			
(1)	997 555 981 03	door trim panel	/LL/L 10-	1	TURBO/COUPE IXVT/537/680 I981
		leather			
	A11	black			
	5X6	stone grey			
	8G2	sand beige			
	3S9	sea blue			
	9S5	terracotta			
	9V6	cocoa			
	BCD	black/stone grey			
	BCE	black/sand beige			
	BCF	black/terracotta			
	D12	dark grey/natural			

Pos	Part Number	Description	Remark	Qty	Model
	T12	brown/natural			
	N12	carrera red			
(1)	997 555 981 06	door trim panel	/LL/L 10-	1	CABRIO IXVT/098/680 I981
		leather			
	A11	black			
	5X6	stone grey			
	8G2	sand beige			
	3S9	sea blue			
	9S5	terracotta			
	9V6	cocoa			
	BCD	black/stone grey			
	BCE	black/sand beige			
	BCF	black/terracotta			
	D12	dark grey/natural			
	T12	brown/natural			
	N12	carrera red			
(1)	997 555 981 07	door trim panel	/LL/L 10-	1	CABRIO IXVT/537/680 I981
		leather			
	A11	black			
	5X6	stone grey			
	8G2	sand beige			
	3S9	sea blue			
	9S5	terracotta			
	9V6	cocoa			
	BCD	black/stone grey			
	BCE	black/sand beige			
	BCF	black/terracotta			
	D12	dark grey/natural			

Pos	Part Number	Description	Remark	Qty	Model
	T12	brown/natural			
	N12	carrera red			
(1)	997 555 982 09	door trim panel	/LL/R 10-	1	IXVT/098/680 I981
		leather			
	A11	black			
	5X6	stone grey			
	8G2	sand beige			
	3S9	sea blue			
	9S5	terracotta			
	9V6	cocoa			
	BCD	black/stone grey			
	BCE	black/sand beige			
	BCF	black/terracotta			
	D12	dark grey/natural			
	T12	brown/natural			
	N12	carrera red			
(1)	997 555 981 12	door trim panel	/LL/L 10-	1	TURBO/COUPE IXTL/XVT/098 I680/981
		leather			
	A11	black			
	5X6	stone grey			
	8G2	sand beige			
	3S9	sea blue			
	9S5	terracotta			
	9V6	cocoa			
	BCD	black/stone grey			
	BCE	black/sand beige			
	BCF	black/terracotta			
	D12	dark grey/natural			

Pos	Part Number	Description	Remark	Qty	Model
	T12	brown/natural			
	N12	carrera red			
(1)	997 555 981 13	door trim panel	/LL/L 10-	1	TURBO/COUPE IXTL/XVT/537 I680/981
		leather			
	A11	black			
	5X6	stone grey			
	8G2	sand beige			
	3S9	sea blue			
	9S5	terracotta			
	9V6	cocoa			
	BCD	black/stone grey			
	BCE	black/sand beige			
	BCF	black/terracotta			
	D12	dark grey/natural			
	T12	brown/natural			
	N12	carrera red			
(1)	997 555 981 18	door trim panel	/LL/L 10-	1	CABRIO IXTL/XVT/098 I680/981
		leather			
	A11	black			
	5X6	stone grey			
	8G2	sand beige			
	3S9	sea blue			
	9S5	terracotta			
	9V6	cocoa			
	BCD	black/stone grey			
	BCE	black/sand beige			
	BCF	black/terracotta			
	D12	dark grey/natural			

Pos	Part Number	Description	Remark	Qty	Model
	T12	brown/natural			
	N12	carrera red			
(1)	997 555 981 19	door trim panel	/LL/L 10-	1	CABRIO IXTL/XVT/537 I680/981
		leather			
	A11	black			
	5X6	stone grey			
	8G2	sand beige			
	3S9	sea blue			
	9S5	terracotta			
	9V6	cocoa			
	BCD	black/stone grey			
	BCE	black/sand beige			
	BCF	black/terracotta			
	D12	dark grey/natural			
	T12	brown/natural			
	N12	carrera red			
(1)	997 555 982 15	door trim panel	/LL/L 10-	1	IXTL/XVT/098 I680/981
		leather			
	A11	black			
	5X6	stone grey			
	8G2	sand beige			
	3S9	sea blue			
	9S5	terracotta			
	9V6	cocoa			
	BCD	black/stone grey			
	BCE	black/sand beige			
	BCF	black/terracotta			
	D12	dark grey/natural			

Pos	Part Number	Description	Remark	Qty	Model
	T12	brown/natural			
	N12	carrera red			
(1)	997 555 981 22	door trim panel	/LL/L 10-	1	TURBO/COUPE IXTT/XVT/098 I680/981
		leather			
	A11	black			
	5X6	stone grey			
	8G2	sand beige			
	3S9	sea blue			
	9S5	terracotta			
	9V6	cocoa			
	BCD	black/stone grey			
	BCE	black/sand beige			
	BCF	black/terracotta			
	D12	dark grey/natural			
	T12	brown/natural			
	N12	carrera red			
(1)	997 555 981 23	door trim panel	/LL/L 10-	1	TURBO/COUPE IXTT/XVT/537 I680/981
		leather			
	A11	black			
	5X6	stone grey			
	8G2	sand beige			
	3S9	sea blue			
	9S5	terracotta			
	9V6	cocoa			
	BCD	black/stone grey			
	BCE	black/sand beige			
	BCF	black/terracotta			
	D12	dark grey/natural			

Pos	Part Number	Description	Remark	Qty	Model
	T12	brown/natural			
	N12	carrera red			
(1)	997 555 981 28	door trim panel	/LL/L 10-	1	CABRIO IXTT/XVT/098 I680/981
		leather			
	A11	black			
	5X6	stone grey			
	8G2	sand beige			
	3S9	sea blue			
	9S5	terracotta			
	9V6	cocoa			
	BCD	black/stone grey			
	BCE	black/sand beige			
	BCF	black/terracotta			
	D12	dark grey/natural			
	T12	brown/natural			
	N12	carrera red			
(1)	997 555 981 29	door trim panel	/LL/L 10-	1	CABRIO IXTT/XVT/537 I680/981
		leather			
	A11	black			
	5X6	stone grey			
	8G2	sand beige			
	3S9	sea blue			
	9S5	terracotta			
	9V6	cocoa			
	BCD	black/stone grey			
	BCE	black/sand beige			
	BCF	black/terracotta			
	D12	dark grey/natural			

Pos	Part Number	Description	Remark	Qty	Model
	T12	brown/natural			
	N12	carrera red			
(1)	997 555 982 25	door trim panel	/LL/R 10-	1	IXTT/XVT/098 I680/981
		leather			
	A11	black			
	5X6	stone grey			
	8G2	sand beige			
	3S9	sea blue			
	9S5	terracotta			
	9V6	cocoa			
	BCD	black/stone grey			
	BCE	black/sand beige			
	BCF	black/terracotta			
	D12	dark grey/natural			
	T12	brown/natural			
	N12	carrera red			
(1)	997 555 981 32	door trim panel	/LL/L 10-	1	TURBO/COUPE IXTV/XVT/098 I680/981
		leather			
	A11	black			
	5X6	stone grey			
	8G2	sand beige			
	3S9	sea blue			
	9S5	terracotta			
	9V6	cocoa			
	BCD	black/stone grey			
	BCE	black/sand beige			
	BCF	black/terracotta			
	D12	dark grey/natural			

Pos	Part Number	Description	Remark	Qty	Model
	T12	brown/natural			
	N12	carrera red			
(1)	997 555 981 33	door trim panel	/LL/L 10-	1	TURBO/COUPE IXTV/XVT/537 I680/981
		leather			
	A11	black			
	5X6	stone grey			
	8G2	sand beige			
	3S9	sea blue			
	9S5	terracotta			
	9V6	cocoa			
	BCD	black/stone grey			
	BCE	black/sand beige			
	BCF	black/terracotta			
	D12	dark grey/natural			
	T12	brown/natural			
	N12	carrera red			
(1)	997 555 981 38	door trim panel	/LL/L 10-	1	CABRIO IXTV/XVT/098 I680/981
		leather			
	A11	black			
	5X6	stone grey			
	8G2	sand beige			
	3S9	sea blue			
	9S5	terracotta			
	9V6	cocoa			
	BCD	black/stone grey			
	BCE	black/sand beige			
	BCF	black/terracotta			
	D12	dark grey/natural			

Pos	Part Number	Description	Remark	Qty	Model
	T12	brown/natural			
	N12	carrera red			
(1)	997 555 981 39	door trim panel	/LL/L 10-	1	CABRIO IXTV/XVT/537 I680/981
		leather			
	A11	black			
	5X6	stone grey			
	8G2	sand beige			
	3S9	sea blue			
	9S5	terracotta			
	9V6	cocoa			
	BCD	black/stone grey			
	BCE	black/sand beige			
	BCF	black/terracotta			
	D12	dark grey/natural			
	T12	brown/natural			
	N12	carrera red			
(1)	997 555 982 35	door trim panel	/LL/R 10-	1	IXTV/XVT/098 I680/981
		leather			
	A11	black			
	5X6	stone grey			
	8G2	sand beige			
	3S9	sea blue			
	9S5	terracotta			
	9V6	cocoa			
	BCD	black/stone grey			
	BCE	black/sand beige			
	BCF	black/terracotta			
	D12	dark grey/natural			

Pos	Part Number	Description	Remark	Qty	Model
	T12	brown/natural			
	N12	carrera red			
(1)	997 555 981 32	door trim panel	/LL/L 10-	1	TURBO/COUPE IXTV/XVT/098 I680/981
		leather			
	A11	black			
	5X6	stone grey			
	8G2	sand beige			
	3S9	sea blue			
	9S5	terracotta			
	9V6	cocoa			
	BCD	black/stone grey			
	BCE	black/sand beige			
	BCF	black/terracotta			
	D12	dark grey/natural			
	T12	brown/natural			
	N12	carrera red			
(1)	997 555 981 33	door trim panel	/LL/L 10-	1	TURBO/COUPE IXTV/XVT/537 I680/981
		leather			
	A11	black			
	5X6	stone grey			
	8G2	sand beige			
	3S9	sea blue			
	9S5	terracotta			
	9V6	cocoa			
	BCD	black/stone grey			
	BCE	black/sand beige			
	BCF	black/terracotta			
	D12	dark grey/natural			

Pos	Part Number	Description	Remark	Qty	Model
	T12	brown/natural			
	N12	carrera red			
(1)	997 555 981 38	door trim panel	/LL/L 10-	1	CABRIO IXTV/XVT/098 I680/981
		leather			
	A11	black			
	5X6	stone grey			
	8G2	sand beige			
	3S9	sea blue			
	9S5	terracotta			
	9V6	cocoa			
	BCD	black/stone grey			
	BCE	black/sand beige			
	BCF	black/terracotta			
	D12	dark grey/natural			
	T12	brown/natural			
	N12	carrera red			
(1)	997 555 981 39	door trim panel	/LL/L 10-	1	CABRIO IXTV/XVT/537 I680/981
		leather			
	A11	black			
	5X6	stone grey			
	8G2	sand beige			
	3S9	sea blue			
	9S5	terracotta			
	9V6	cocoa			
	BCD	black/stone grey			
	BCE	black/sand beige			
	BCF	black/terracotta			
	D12	dark grey/natural			

Pos	Part Number	Description	Remark	Qty	Model
	T12	brown/natural			
	N12	carrera red			
(1)	997 555 982 35	door trim panel	/LL/R 10-	1	IXTV/XVT/098 I680/981
		leather			
	A11	black			
	5X6	stone grey			
	8G2	sand beige			
	3S9	sea blue			
	9S5	terracotta			
	9V6	cocoa			
	BCD	black/stone grey			
	BCE	black/sand beige			
	BCF	black/terracotta			
	D12	dark grey/natural			
	T12	brown/natural			
	N12	carrera red			
(1)	997 555 981 42	door trim panel	/LL/L 10-	1	TURBO/COUPE IXTW/XVT/098 I680/981
		leather			
	A11	black			
	5X6	stone grey			
	8G2	sand beige			
	3S9	sea blue			
	9S5	terracotta			
	9V6	cocoa			
	BCD	black/stone grey			
	BCE	black/sand beige			
	BCF	black/terracotta			
	D12	dark grey/natural			

Pos	Part Number	Description	Remark	Qty	Model
	T12	brown/natural			
	N12	carrera red			
(1)	997 555 981 43	door trim panel	/LL/L 10-	1	TURBO/COUPE IXTW/XVT/537 I680/981
		leather			
	A11	black			
	5X6	stone grey			
	8G2	sand beige			
	3S9	sea blue			
	9S5	terracotta			
	9V6	cocoa			
	BCD	black/stone grey			
	BCE	black/sand beige			
	BCF	black/terracotta			
	D12	dark grey/natural			
	T12	brown/natural			
	N12	carrera red			
(1)	997 555 981 48	door trim panel	/LL/L 10-	1	CABRIO IXTW/XVT/098 I680/981
		leather			
	A11	black			
	5X6	stone grey			
	8G2	sand beige			
	3S9	sea blue			
	9S5	terracotta			
	9V6	cocoa			
	BCD	black/stone grey			
	BCE	black/sand beige			
	BCF	black/terracotta			
	D12	dark grey/natural			

Pos	Part Number	Description	Remark	Qty	Model
	T12	brown/natural			
	N12	carrera red			
(1)	997 555 981 49	door trim panel	/LL/L 10-	1	CABRIO IXTW/XVT/537 I680/981
		leather			
	A11	black			
	5X6	stone grey			
	8G2	sand beige			
	3S9	sea blue			
	9S5	terracotta			
	9V6	cocoa			
	BCD	black/stone grey			
	BCE	black/sand beige			
	BCF	black/terracotta			
	D12	dark grey/natural			
	T12	brown/natural			
	N12	carrera red			
(1)	997 555 982 45	door trim panel	/LL/R 10-	1	IXTW/XVT/098 I680/981
		leather			
	A11	black			
	5X6	stone grey			
	8G2	sand beige			
	3S9	sea blue			
	9S5	terracotta			
	9V6	cocoa			
	BCD	black/stone grey			
	BCE	black/sand beige			
	BCF	black/terracotta			
	D12	dark grey/natural			

Pos	Part Number	Description	Remark	Qty	Model
	T12	brown/natural			
	N12	carrera red			
2	999 507 533 02	clamp 8,0X 10/2,5		2	
3	955 555 243 00	fixing clip for mount door trim panel		9	
4	999 073 322 02	oval-head screw M 6 X 20 for mount door trim panel		5	
5	997 555 221 01	lid shelf	/L	1	TURBO
	FSA	black			
	FSB	stone grey			
	FSC	sand beige			
	FSD	sea blue			
	FSF	terracotta			
	FSG	cocoa			
	FSH	dark grey/natural			
	FSJ	brown/natural			
	FSP	carrera red			
(5)	997 555 222 01	lid shelf	/R	1	TURBO
	FSA	black			
	FSB	stone grey			
	FSC	sand beige			
	FSD	sea blue			
	FSF	terracotta			
	FSG	cocoa			
	FSH	dark grey/natural			
	FSJ	brown/natural			

Pos	Part Number	Description	Remark	Qty	Model
	FSP	carrera red			
(5)	997 555 989 00	lid	/L	1	TURBO IXTL
		shelf carbon			
	A35	black			
(5)	997 555 990 00	lid	/R	1	TURBO IXTL
		shelf carbon			
	A35	black			
(5)	997 555 989 02	lid	/L	1	TURBO IXTT
		shelf			
	S61	macassar			
(5)	997 555 990 02	lid	/R	1	TURBO IXTT
		shelf			
	S61	macassar			
(5)	997 555 989 03	lid	/L	1	TURBO IXTW
		shelf			
	V04	galvano silver			
(5)	997 555 990 03	lid	/R	1	TURBO IXTW
		shelf			
	V04	galvano silver			
6	997 555 833 00	steering knuckle spring for lid shelf	/L	1	
(6)	997 555 834 00	steering knuckle spring for lid shelf	/R	1	
7	997 555 841 00	damper shelf		1	
(8)	997 555 261 01	handle lower part	/L	1	TURBO
	A11	black			
	5X6	stone grey			
	8G2	sand beige			
	3S9	sea blue			
	9S5	terracotta			
	9V6	cocoa			
	D12	dark grey/natural			
	T12	brown/natural			
	N12	carrera red			
(8)	997 555 262 01	handle lower part	/R	1	TURBO
	A11	black			
	5X6	stone grey			
	8G2	sand beige			
	3S9	sea blue			
	9S5	terracotta			
	9V6	cocoa			
	D12	dark grey/natural			
	T12	brown/natural			
	N12	carrera red			
9	999 919 229 02	oval-head screw 6,0 X 40,0 for mount handle		2	
(10)	997 555 381 03	axle bearing	/L	1	
(10)	997 555 382 03	axle bearing	/R	1	
11	999 919 164 09	oval-head screw 5 X 12 for mount axle bearing		3	
12	997 555 461 01	lever door opener	/L	1	
	V05	galvano silver			

Pos	Part Number	Description	Remark	Qty	Model
(12)	997 555 462 01	lever door opener	/R	1	
	V05	galvano silver			
13	999 919 164 09	oval-head screw 5 X 12 for mount lever door opener		1	
14	997 555 683 00	cap airbag	/L	1	
	A03	black			
	5V7	stone grey			
	5Z1	sand beige			
	8W7	sea blue			
	8X8	terracotta			
	8P9	cocoa			
	T13	brown/natural			
	N23	carrera red			
(14)	997 555 684 00	cap airbag	/R	1	
	A03	black			
	5V7	stone grey			
	5Z1	sand beige			
	8W7	sea blue			
	8X8	terracotta			
	8P9	cocoa			
	T13	brown/natural			
	N23	carrera red			
15	997 555 643 01	cover front lacquered	/L	1	-IXVT
	A03	black			
	5V7	stone grey			
	5Z1	sand beige			
	8W7	sea blue			
	8X8	terracotta			
	8P9	cocoa			
	T13	brown/natural			
	N23	carrera red			
(15)	997 555 644 01	cover front lacquered	/R	1	-IXVT
	A03	black			
	5V7	stone grey			
	5Z1	sand beige			
	8W7	sea blue			
	8X8	terracotta			
	8P9	cocoa			
	T13	brown/natural			
	N23	carrera red			
(15)	997 555 643 02	cover front leather	/L 10-	1	IXVT
	A11	black			
	5X6	stone grey			
	8G2	sand beige			
	3S9	sea blue			
	9S5	terracotta			
	9V6	cocoa			
	D12	dark grey/natural			
	T12	brown/natural			
	N12	carrera red			
(15)	997 555 644 02	cover front leather	/R 10-	1	IXVT

Pos	Part Number	Description	Remark	Qty	Model
	A11	black			
	5X6	stone grey			
	8G2	sand beige			
	3S9	sea blue			
	9S5	terracotta			
	9V6	cocoa			
	D12	dark grey/natural			
	T12	brown/natural			
	N12	carrera red			
16	997 555 431 01	cover door handle	/L	1	TURBO
	FSA	black			
	FSB	stone grey			
	FSC	sand beige			
	FSD	sea blue			
	FSF	terracotta			
	FSG	cocoa			
	FSH	dark grey/natural			
	FSJ	brown/natural			
	FSP	carrera red			
(16)	997 555 432 01	cover door handle	/R	1	TURBO
	FSA	black			
	FSB	stone grey			
	FSC	sand beige			
	FSD	sea blue			
	FSF	terracotta			
	FSG	cocoa			
	FSH	dark grey/natural			
	FSJ	brown/natural			
	FSP	carrera red			
(16)	997 555 991 00	cover door handle carbon	/L	1	TURBO IXTL
	A11	black			
	5X6	stone grey			
	8G2	sand beige			
	3S9	sea blue			
	9S5	terracotta			
	9V6	cocoa			
	D12	dark grey/natural			
	T12	brown/natural			
	N12	carrera red			
(16)	997 555 992 00	cover door handle carbon	/R	1	TURBO IXTL
	A11	black			
	5X6	stone grey			
	8G2	sand beige			
	3S9	sea blue			
	9S5	terracotta			
	9V6	cocoa			
	D12	dark grey/natural			
	T12	brown/natural			
	N12	carrera red			
(16)	997 555 991 02	cover door handle macassar	/L	1	TURBO IXTT
	A11	black			
	5X6	stone grey			

Pos	Part Number	Description	Remark	Qty	Model
	8G2	sand beige			
	3S9	sea blue			
	9S5	terracotta			
	9V6	cocoa			
	D12	dark grey/natural			
	T12	brown/natural			
	N12	carrera red			
(16)	997 555 992 02	cover	/R	1	TURBO IXTT
		door handle macassar			
	A11	black			
	5X6	stone grey			
	8G2	sand beige			
	3S9	sea blue			
	9S5	terracotta			
	9V6	cocoa			
	D12	dark grey/natural			
	T12	brown/natural			
	N12	carrera red			
(16)	997 555 991 03	cover	/L	1	TURBO IXTW
		door handle aluminium look			
	A11	black			
	5X6	stone grey			
	8G2	sand beige			
	3S9	sea blue			
	9S5	terracotta			
	9V6	cocoa			
	D12	dark grey/natural			
	T12	brown/natural			
	N12	carrera red			
(16)	997 555 992 03	cover	/R	1	TURBO IXTW
		door handle aluminium look			
	A11	black			
	5X6	stone grey			
	8G2	sand beige			
	3S9	sea blue			
	9S5	terracotta			
	9V6	cocoa			
	D12	dark grey/natural			
	T12	brown/natural			
	N12	carrera red			
17	999 591 380 01	cable clamp		4	
18	997 555 685 02	cover door mirror driver's side lacquered	/LL/L	1	I098
	A03	black			
	5V7	stone grey			
	5Z1	sand beige			
	8W7	sea blue			
	8X8	terracotta			
	8P9	cocoa			
	T13	brown/natural			
	N23	carrera red			
(18)	997 555 995 00	cover door mirror driver's side leather	/LL/L	1	IXDX/098
	A11	black			
	5X6	stone grey			

Pos	Part Number	Description	Remark	Qty	Model
	8G2	sand beige			
	3S9	sea blue			
	9S5	terracotta			
	9V6	cocoa			
	T12	brown/natural			
	N12	carrera red			
(18)	997 555 686 02	cover door mirror passenger's side lacquered	/LL/R	1	I098
	A03	black			
	5V7	stone grey			
	5Z1	sand beige			
	8W7	sea blue			
	8X8	terracotta			
	8P9	cocoa			
	T13	brown/natural			
	N23	carrera red			
(18)	997 555 996 00	cover door mirror passenger's side leather	/LL/R	1	IXDX/098
	A11	black			
	5X6	stone grey			
	8G2	sand beige			
	3S9	sea blue			
	9S5	terracotta			
	9V6	cocoa			
	D12	dark grey/natural			
	T12	brown/natural			
	N12	carrera red			

Pos	Part Number	Description	Remark	Qty	Model
19	997 555 577 00	cap handle liner		1	
	A03	black			
	5V7	stone grey			
	8W7	sea blue			
	8X8	terracotta			
	8P9	cocoa			
	T13	brown/natural			
	N23	carrera red			
20	997 555 895 00	plastic foam strip for woofer		1	
21	997 645 511 00	logo		2	I680
22	997 555 597 00	spacer lid hinge		2	
23	999 702 281 41	grommet axle bearing		1	
24	997 555 271 01	handle upper part	/L	1	TURBO
	FSA	black			
	FSB	stone grey			
	FSC	sand beige			
	FSD	sea blue			
	FSF	terracotta			
	FSG	cocoa			
	FSH	dark grey/natural			
	FSJ	brown/natural			
	FSP	carrera red			
(24)	997 555 272 01	handle upper part	/R	1	TURBO
	FSA	black			
	FSB	stone grey			

Pos	Part Number	Description	Remark	Qty	Model
	FSC	sand beige			
	FSD	sea blue			
	FSF	terracotta			
	FSG	cocoa			
	FSH	dark grey/natural			
	FSJ	brown/natural			
	FSP	carrera red			
(24)	997 555 987 00	handle	/L	1	TURBO IXTL
		upper part			
	A35	black			
(24)	997 555 988 00	handle	/R	1	TURBO IXTL
		upper part carbon			
	A35	black			
(24)	997 555 987 02	handle	/L	1	TURBO IXTT
		upper part			
	S61	macassar			
(24)	997 555 988 02	handle	/R	1	TURBO IXTT
		upper part			
	S61	macassar			
(24)	997 555 987 03	handle	/L	1	TURBO IXTW
		upper part			
	V04	galvano silver			
(24)	997 555 988 03	handle	/R	1	TURBO IXTW
		upper part			
	V04	galvano silver			
25	997 555 351 03	insert	/LL/L	1	COUPE I098
		handle liner lacquered			
	A03	black			
	5V7	stone grey			
	5Z1	sand beige			
	8W7	sea blue			
	8X8	terracotta			
	8P9	cocoa			
	T13	brown/natural			
	N23	carrera red			
(25)	997 555 351 05	insert	/LL/L	1	CABRIO I098
		handle liner lacquered			
	A03	black			
	5V7	stone grey			
	5Z1	sand beige			
	8W7	sea blue			
	8X8	terracotta			
	8P9	cocoa			
	T13	brown/natural			
	N23	carrera red			
25	997 555 352 04	insert handle liner lacquered	/LL/R	1	I098
	A03	black			
	5V7	stone grey			
	5Z1	sand beige			
	8W7	sea blue			
	8X8	terracotta			
	8P9	cocoa			
	T13	brown/natural			
	N23	carrera red			

Pos	Part Number	Description	Remark	Qty	Model
25	997 555 985 00	insert	/LL/L	1	COUPE IXTV/098
		handle liner leather			
	A11	black			
	5X6	stone grey			
	8G2	sand beige			
	3S9	sea blue			
	9S5	terracotta			
	9V6	cocoa			
	D12	dark grey/natural			
	T12	brown/natural			
	N12	carrera red			
(25)	997 555 985 01	insert	/LL/L	1	CABRIO IXTV/098
		handle liner leather			
	A11	black			
	5X6	stone grey			
	8G2	sand beige			
	3S9	sea blue			
	9S5	terracotta			
	9V6	cocoa			
	D12	dark grey/natural			
	T12	brown/natural			
	N12	carrera red			
(25)	997 555 986 00	insert handle liner leather	/LL/R	1	IXTV/098
	A11	black			
	5X6	stone grey			
	8G2	sand beige			
	3S9	sea blue			
	9S5	terracotta			
	9V6	cocoa			
	D12	dark grey/natural			
	T12	brown/natural			
	N12	carrera red			
25	997 555 985 03	insert handle liner carbon	/LL/L	1	TURBO/COUPE IXTL/098
	A35	black			
(25)	997 555 985 04	insert handle liner carbon	/LL/L	1	CABRIO IXTL/098
	A35	black			
(25)	997 555 986 03	insert handle liner carbon	/LL/R	1	TURBO IXTL/098
	A35	black			
25	997 555 985 09	insert handle liner	/LL/L	1	TURBO/COUPE IXTT/098
	S61	macassar			
(25)	997 555 985 10	insert handle liner	/LL/L	1	CABRIO IXTT/098
	S61	macassar			
25	997 555 986 09	insert handle liner	/LL/R	1	TURBO IXTT/098
	S61	macassar			
25	997 555 985 12	insert handle liner	/LL/L	1	TURBO/COUPE IXTW/098
	V04	galvano silver			

Pos	Part Number	Description	Remark	Qty	Model
(25)	997 555 985 13	insert	/LL/L	1	CABRIO IXTW/098
		handle liner			
	V04	galvano silver			
25	997 555 986 12	insert	/LL/R	1	TURBO IXTW/098
		handle liner			
	V04	galvano silver			

Pos	Part Number	Description	Remark	Qty	Model

Model	Year	MG	SG	Illustration	Restrictions	UPD	20:26	06.02.2010
997T2	2010	8	09	809-00		248	USA / CANADA	

PORSCHE PET PORSCHE

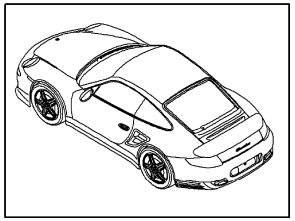

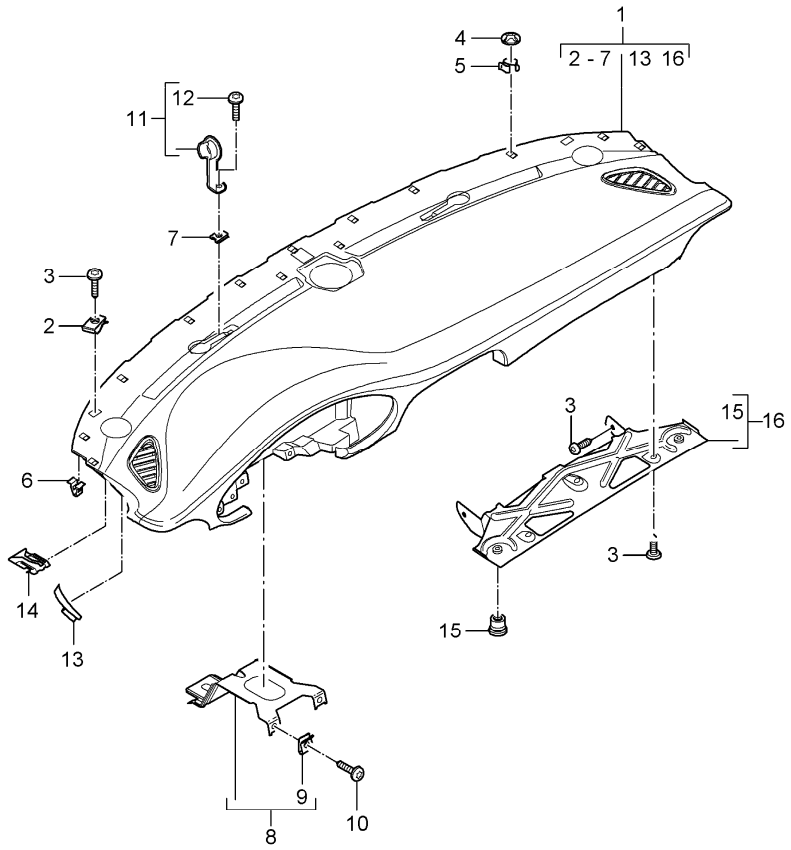

Pos	Part Number	Description	Remark	Qty	Model
		dashboard trim upper part with mounting parts			
		accessories see group 8/09/01			
1	997 552 101 11	dashboard upper part leather	/LL	1	I098/981
	FSA	black			
	FSB	stone grey			
	FSC	sand beige			
	FSD	sea blue			
	FSF	terracotta			
	FSG	cocoa			
	FSH	dark grey/natural			
	FSJ	brown/natural			
	FSP	carrera red			
1	997 552 101 13	dashboard upper part leather	/LL	1	I098/639/640 I981
	FSA	black			
	FSB	stone grey			
	FSC	sand beige			
	FSD	sea blue			
	FSF	terracotta			
	FSG	cocoa			
	FSH	dark grey/natural			
	FSJ	brown/natural			
	FSP	carrera red			
2	999 507 971 01	speed nut ST 4,2		X	

Pos	Part Number	Description	Remark	Qty	Model
3	999 073 155 09	tapping screw ST 4,2 X 13		X	
4	999 507 106 02	clamping washer 8,0		X	
5	999 507 573 02	clamp 6,7 - 8,1		X	
6	999 507 732 01	clamp 8,0 X 12,0 /4,0		X	
7	999 507 020 01	speed nut ST 4,2 for mount dashboard		X	
8	997 552 617 01	support dashboard driver's side		1	
9	999 507 020 01	speed nut ST 4,2		2	
10	999 073 155 09	tapping screw ST 4,2 X 13		2	
11	997 552 673 00	lid defroster trim		2	
12	999 073 226 09	tapping screw ST 4,2 X 16		2	
13	997 552 481 00	insert a-pillar	/L	1	
(13)	997 552 482 00	insert a-pillar	/R	1	
14	8E0 857 117	clamp mount dashboard cowl panel		2	
(15)	999 507 319 01	captive nut M 5		2	
16	997 552 360 03	retaining bracket for beverages support	/LL	1	I098

Pos	Part Number	Description	Remark	Qty	Model

Model	Year	MG	SG	Illustration	Restrictions	UPD	20:27	06.02.2010	PORSCHE	PET	PORSCHE
997T2	2010	8	09	809-01		248	USA / CANADA				

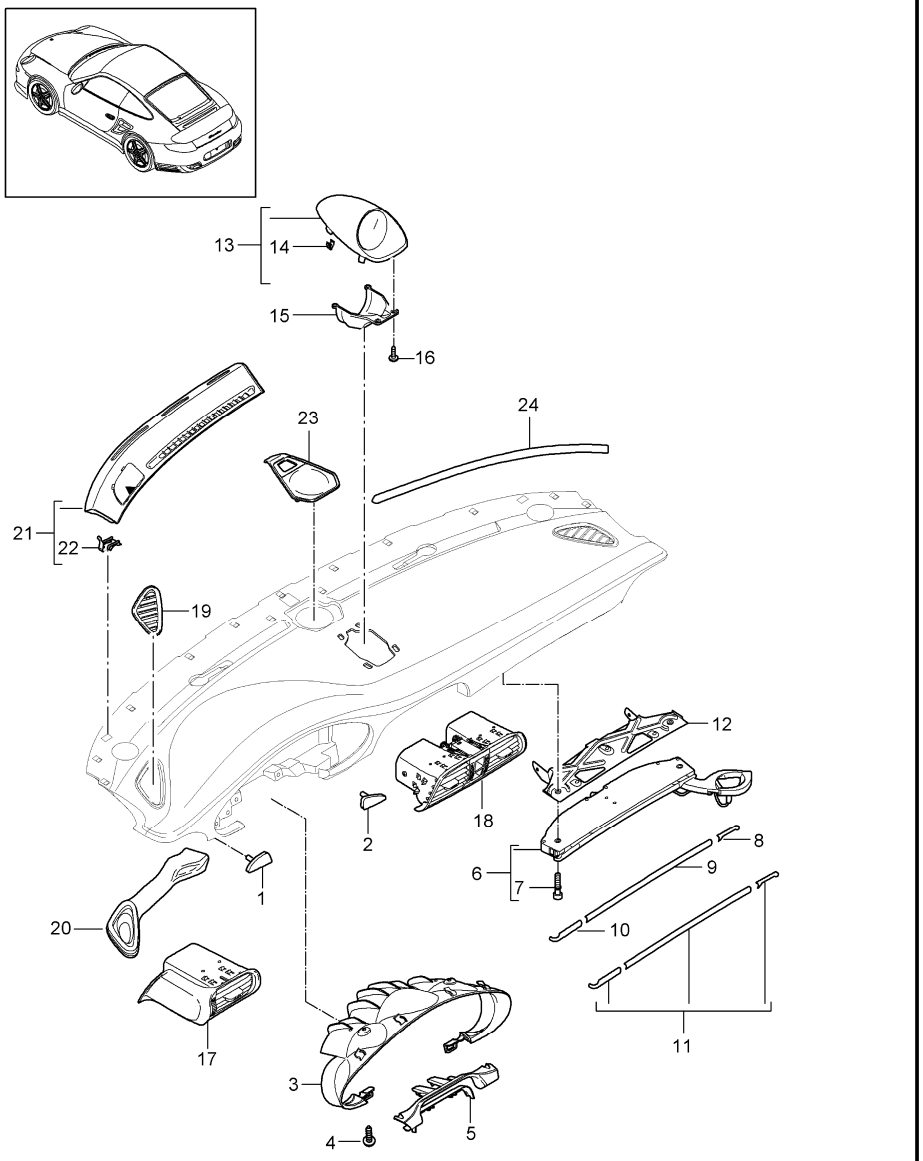

Pos	Part Number	Description	Remark	Qty	Model
		accessories dashboard trim upper part			
1	997 552 381 02	moulding	/LL	1	TURBO I098
		driver's side outer			
	V04	galvano silver			
1	997 552 381 03	moulding	/LL	1	TURBO I098/801
		driver's side outer			
	S61	macassar			
1	997 552 381 05	moulding	/LL	1	TURBO I098/803
		driver's side outer			
	A35	black			
1	997 552 986 00	moulding driver's side outer	/LL	1	IXVP/098
	A11	black			
	5X6	stone grey			
	8G2	sand beige			
	3S9	sea blue			
	9S5	terracotta			
	9V6	cocoa			
	D12	dark grey/natural			
	T12	brown/natural			
	N12	carrera red			
(1)	997 552 986 50	moulding driver's side outer	/LL	1	IXDM/098
	G2X	prime coated			
2	997 552 383 02	moulding	/LL	1	TURBO I098
		driver's side centre			

Pos	Part Number	Description	Remark	Qty	Model
	V04	galvano silver			
2	997 552 383 03	moulding driver's side centre	/LL	1	TURBO I098/801
	S61	macassar			
2	997 552 383 05	moulding driver's side centre	/LL	1	TURBO I098/803
	A35	black			
2	997 552 987 00	moulding driver's side centre	/LL	1	IXVP/098
	A11	black			
	5X6	stone grey			
	8G2	sand beige			
	3S9	sea blue			
	9S5	terracotta			
	9V6	cocoa			
	D12	dark grey/natural			
	T12	brown/natural			
	N12	carrera red			
(2)	997 552 987 50	moulding driver's side centre	/LL	1	IXDM/098
	G2X	prime coated			
3	997 552 325 01	cover instrument cluster	/LL	1	I098
	A03	black			
	5V7	stone grey			
	5Z1	sand beige			
	8W7	sea blue			
	8X8	terracotta			
	8P9	cocoa			
	T13	brown/natural			
	N23	carrera red			
3	997 552 989 00	cover instrument cluster	/LL	1	IXNG/098
	A11	black			
	5X6	stone grey			
	8G2	sand beige			
	3S9	sea blue			
	9S5	terracotta			
	9V6	cocoa			
	D12	dark grey/natural			
	T12	brown/natural			
	N12	carrera red			
3	997 552 989 02	cover instrument cluster	/LL	1	TURBO IXCL/098
	V04	galvano silver			
(3)	997 552 995 00	cover instrument cluster	/LL	1	TURBO IXDP/098
	G2X	prime coated			
4	999 073 155 09	tapping screw ST 4,2 X 13		2	
5	997 552 271 01	bridge		1	
	A03	black			
	5V7	stone grey			
	5Z1	sand beige			
	8W7	sea blue			
	8X8	terracotta			
	8P9	cocoa			
	T13	brown/natural			

Pos	Part Number	Description	Remark	Qty	Model
	N23	carrera red			
5	997 552 978 00	bridge leather		1	IXNS
	A11	black			
	5X6	stone grey			
	8G2	sand beige			
	3S9	sea blue			
	9S5	terracotta			
	9V6	cocoa			
	D12	dark grey/natural			
	T12	brown/natural			
	N12	carrera red			
6	997 552 294 03	support beverages	/LL	1	I098
--	997 552 905 00	repair kit flap torsion spring for beverages support		1	
7	900 067 416 01	pan-head screw M5 X 27		2	
8	997 552 394 02	cover	/LL/R	1	TURBO I098
	V04	galvano silver			
8	997 552 396 05	cover	/LL/R	1	TURBO I098/803
	A35	black			
8	997 552 993 00	cover	/LL/R	1	IXVP/098
	A11	black			
	5X6	stone grey			
	8G2	sand beige			
	3S9	sea blue			
	9S5	terracotta			
	9V6	cocoa			
	D12	dark grey/natural			
	T12	brown/natural			
	N12	carrera red			
(8)	997 552 993 50	cover	/LL/R	1	IXDM/098
	G2X	prime coated			
9	997 552 398 01	cover centre	/LL	1	TURBO I098
	V04	galvano silver			
9	997 552 398 04	cover centre	/LL	1	TURBO I098/803
	A35	black			
9	997 552 994 00	cover centre	/LL	1	IXVP/098
	A11	black			
	5X6	stone grey			
	8G2	sand beige			
	3S9	sea blue			
	9S5	terracotta			
	9V6	cocoa			
	D12	dark grey/natural			
	T12	brown/natural			
	N12	carrera red			
9	997 552 994 50	cover centre	/LL	1	IXDM/098
	G2X	prime coated			
10	997 552 396 02	cover	/LL/L	1	TURBO I098
	V04	galvano silver			
10	997 552 394 05	cover	/LL/L	1	TURBO I098/803

Pos	Part Number	Description	Remark	Qty	Model
	A35	black			
10	997 552 992 00	cover	/LL/L	1	IXVP/098
	A11	black			
	5X6	stone grey			
	8G2	sand beige			
	3S9	sea blue			
	9S5	terracotta			
	9V6	cocoa			
	D12	dark grey/natural			
	T12	brown/natural			
	N12	carrera red			
(10)	997 552 992 50	cover	/LL/L	1	IXDM/098
	G2X	prime coated			
11	997 552 904 00	set cover wood	/LL	1	TURBO I098/801
	S61	macassar			
12 P		retaining bracket for beverages support see group 8/09/00		1	
(13)	997 552 371 01	air box upper part		1	I639/640/981
	A11	black			
	5X6	stone grey			
	8G2	sand beige			
	3S9	sea blue			
	9S5	terracotta			
	9V6	cocoa			
	D12	dark grey/natural			
	T12	brown/natural			
	N12	carrera red			
14	999 507 920 01	u-clamp 1,7-2,1		4	I639/640
15	997 552 373 01	support for air box upper part		1	I639/640
16	999 919 167 09	oval-head screw 3,0 X 10 for mount support air box		4	
17	997 552 131 08	side vent	/L	1	TURBO
	V04	galvano silver			
(17)	997 552 132 08	side vent	/R	1	TURBO
	V04	galvano silver			
17	997 552 981 00	side vent	/L	1	IXN3
	A11	black			
	5X6	stone grey			
	8G2	sand beige			
	3S9	sea blue			
	9S5	terracotta			
	9V6	cocoa			
	D12	dark grey/natural			
	T12	brown/natural			
	N12	carrera red			
(17)	997 552 982 00	side vent	/R	1	IXN3
	A11	black			
	5X6	stone grey			
	8G2	sand beige			
	3S9	sea blue			

Pos	Part Number	Description	Remark	Qty	Model
	9S5	terracotta			
	9V6	cocoa			
	D12	dark grey/natural			
	T12	brown/natural			
	N12	carrera red			
17	997 552 981 01	side vent	/L	1	IXKD
	A11	black			
	5X6	stone grey			
	8G2	sand beige			
	3S9	sea blue			
	9S5	terracotta			
	9V6	cocoa			
	D12	dark grey/natural			
	T12	brown/natural			
	N12	carrera red			
(17)	997 552 982 01	side vent	/R	1	IXKD
	A11	black			
	5X6	stone grey			
	8G2	sand beige			
	3S9	sea blue			
	9S5	terracotta			
	9V6	cocoa			
	D12	dark grey/natural			
	T12	brown/natural			
	N12	carrera red			
17	997 552 981 03	side vent	/L	1	TURBO IXJL
	A11	black			
	5X6	stone grey			
	8G2	sand beige			
	3S9	sea blue			
	9S5	terracotta			
	9V6	cocoa			
	D12	dark grey/natural			
	T12	brown/natural			
	N12	carrera red			
(17)	997 552 982 03	side vent	/R	1	TURBO IXJL
	A11	black			
	5X6	stone grey			
	8G2	sand beige			
	3S9	sea blue			
	9S5	terracotta			
	9V6	cocoa			
	D12	dark grey/natural			
	T12	brown/natural			
	N12	carrera red			
17	997 552 981 04	side vent	/L	1	TURBO IXCN
	A11	black			
	5X6	stone grey			
	8G2	sand beige			
	3S9	sea blue			
	9S5	terracotta			
	9V6	cocoa			
	D12	dark grey/natural			
	T12	brown/natural			
	N12	carrera red			

Pos	Part Number	Description	Remark	Qty	Model
(17)	997 552 982 04	side vent	/R	1	TURBO IXCN
	A11	black			
	5X6	stone grey			
	8G2	sand beige			
	3S9	sea blue			
	9S5	terracotta			
	9V6	cocoa			
	D12	dark grey/natural			
	T12	brown/natural			
	N12	carrera red			
(18)	997 552 141 10	centre nozzle		1	TURBO
	V04	galvano silver			
(18)	997 552 980 05	centre nozzle		1	IXVM
	A11	black			
	5X6	stone grey			
	8G2	sand beige			
	3S9	sea blue			
	9S5	terracotta			
	9V6	cocoa			
	D12	dark grey/natural			
	T12	brown/natural			
	N12	carrera red			
(18)	997 552 980 06	centre nozzle		1	IXZB
	A11	black			
	5X6	stone grey			
	8G2	sand beige			
	3S9	sea blue			
	9S5	terracotta			
	9V6	cocoa			
	D12	dark grey/natural			
	T12	brown/natural			
	N12	carrera red			
(18)	997 552 980 08	centre nozzle		1	TURBO IXJN
	A11	black			
	5X6	stone grey			
	8G2	sand beige			
	3S9	sea blue			
	9S5	terracotta			
	9V6	cocoa			
	D12	dark grey/natural			
	T12	brown/natural			
	N12	carrera red			
(18)	997 552 980 09	centre nozzle		1	TURBO IXCY
	A11	black			
	5X6	stone grey			
	8G2	sand beige			
	3S9	sea blue			
	9S5	terracotta			
	9V6	cocoa			
	D12	dark grey/natural			
	T12	brown/natural			
	N12	carrera red			
19	997 552 455 01	cover defroster vent	/L	1	
	A03	black			
	5V7	stone grey			

Pos	Part Number	Description	Remark	Qty	Model
	5Z1	sand beige			
	8W7	sea blue			
	8X8	terracotta			
	8P9	cocoa			
	T13	brown/natural			
	N23	carrera red			
(19)	997 552 456 01	cover defroster vent	/R	1	
	A03	black			
	5V7	stone grey			
	5Z1	sand beige			
	8W7	sea blue			
	8X8	terracotta			
	8P9	cocoa			
	T13	brown/natural			
	N23	carrera red			
20	997 552 315 02	air duct lateral	/L	1	
(20)	997 552 316 02	air duct lateral	/R	1	
21	997 552 175 01	defroster trim	/L	1	
	A03	black			
	5V7	stone grey			
	5Z1	sand beige			
	8W7	sea blue			
	8X8	terracotta			
	8P9	cocoa			
	T13	brown/natural			
	N23	carrera red			
(21)	997 552 176 01	defroster trim	/R	1	

Pos	Part Number	Description	Remark	Qty	Model
	A03	black			
	5V7	stone grey			
	5Z1	sand beige			
	8W7	sea blue			
	8X8	terracotta			
	8P9	cocoa			
	T13	brown/natural			
	N23	carrera red			
21	997 552 983 00	defroster trim	/L	1	IXV1
	A11	black			
	5X6	stone grey			
	8G2	sand beige			
	3S9	sea blue			
	9S5	terracotta			
	9V6	cocoa			
	D12	dark grey/natural			
	T12	brown/natural			
	N12	carrera red			
(21)	997 552 984 00	defroster trim	/R	1	IXV1
	A11	black			
	5X6	stone grey			
	8G2	sand beige			
	3S9	sea blue			
	9S5	terracotta			
	9V6	cocoa			
	D12	dark grey/natural			
	T12	brown/natural			
	N12	carrera red			

Pos	Part Number	Description	Remark	Qty	Model
22	999 591 307 01	u-clamp mount defroster trim		2	
23	997 552 351 01	cover centre		1	
	A03	black			
	5V7	stone grey			
	5Z1	sand beige			
	8W7	sea blue			
	8X8	terracotta			
	8P9	cocoa			
	T13	brown/natural			
	N23	carrera red			
(23)	997 552 985 00	cover centre		1	IXV1
	A11	black			
	5X6	stone grey			
	8G2	sand beige			
	3S9	sea blue			
	9S5	terracotta			
	9V6	cocoa			
	D12	dark grey/natural			
	T12	brown/natural			
	N12	carrera red			
24	997 552 645 00	gasket cowl		1	

Model	Year	MG	SG	Illustration	Restrictions	UPD	20:27	06.02.2010	PORSCHE PET PORSCHE
997T2	2010	8	09	809-03		248	USA / CANADA		

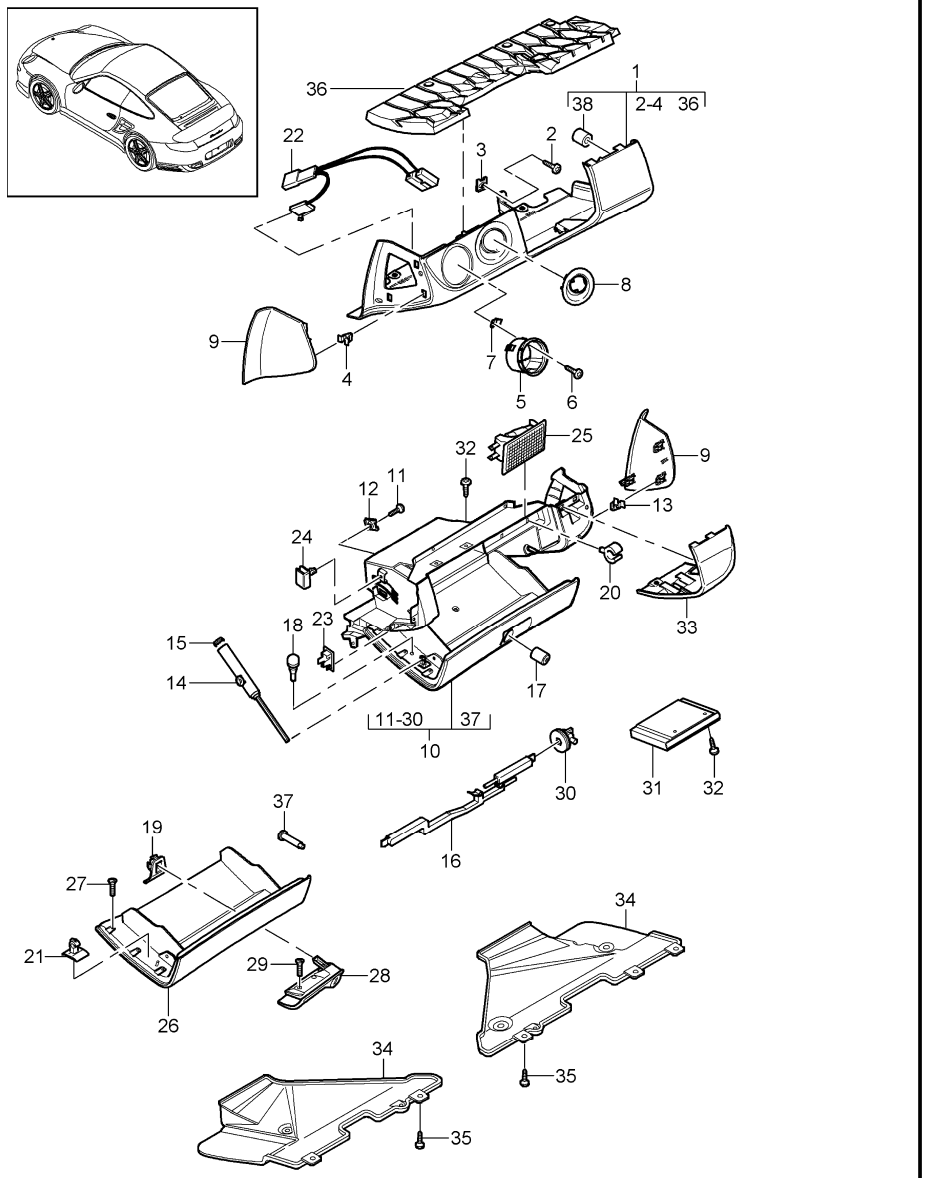

Pos	Part Number	Description	Remark	Qty	Model
		glove compartment lid and lining driver's side			
1	997 552 201 03	lining leather	/LL	1	I098/981
	A11	black			
	5X6	stone grey			
	8G2	sand beige			
	3S9	sea blue			
	9S5	terracotta			
	9V6	cocoa			
	D12	dark grey/natural			
	T12	brown/natural			
	N12	carrera red			
2	999 073 155 09	tapping screw 4,2 X 13 for mount lining		8	
3	999 507 971 01	speed nut 4,2 for mount lining		8	
4	999 507 732 01	clamp 8 X 12/ 4 for mount lining		7	
5	997 552 427 01	cover light switch		1	
	A03	black			
	5V7	stone grey			
	5Z1	sand beige			
	8W7	sea blue			
	8X8	terracotta			

Pos	Part Number	Description	Remark	Qty	Model
	8P9	cocoa			
	T13	brown/natural			
	N23	carrera red			
6	999 073 155 09	tapping screw 4,2 X 13 for mount cover light switch		3	
7	999 507 971 01	speed nut 4,2 for mount cover light switch		3	
8	997 552 425 01	cover ignition starter lock	/LL	1	I098
	A03	black			
	5V7	stone grey			
	5Z1	sand beige			
	8W7	sea blue			
	8X8	terracotta			
	8P9	cocoa			
	T13	brown/natural			
	N23	carrera red			
(8)	997 552 998 00	cover ignition starter lock leather	/LL	1	IXDS/098
	A11	black			
	5X6	stone grey			
	8G2	sand beige			
	3S9	sea blue			
	9S5	terracotta			
	9V6	cocoa			
	D12	dark grey/natural			
	T12	brown/natural			
	N12	carrera red			
9	997 552 405 02	cover	/L	1	
	A03	black			
	5V7	stone grey			
	5Z1	sand beige			
	8W7	sea blue			
	8X8	terracotta			
	8P9	cocoa			
	T13	brown/natural			
	N23	carrera red			
(9)	997 552 406 02	cover	/R	1	
	A03	black			
	5V7	stone grey			
	5Z1	sand beige			
	8W7	sea blue			
	8X8	terracotta			
	8P9	cocoa			
	T13	brown/natural			
	N23	carrera red			
(9)	997 552 996 01	cover leather	/L	1	TURBO IXDV
	A11	black			
	5X6	stone grey			
	8G2	sand beige			
	3S9	sea blue			
	9S5	terracotta			
	9V6	cocoa			
	D12	dark grey/natural			

Pos	Part Number	Description	Remark	Qty	Model
	T12	brown/natural			
	N12	carrera red			
(9)	997 552 996 02	cover	/R	1	TURBO IXDV
		leather			
	A11	black			
	5X6	stone grey			
	8G2	sand beige			
	3S9	sea blue			
	9S5	terracotta			
	9V6	cocoa			
	D12	dark grey/natural			
	T12	brown/natural			
	N12	carrera red			
10	997 552 204 07	glove compartment leather complete	/LL	1	I098/981
	A11	black			
	5X6	stone grey			
	8G2	sand beige			
	3S9	sea blue			
	9S5	terracotta			
	9V6	cocoa			
	D12	dark grey/natural			
	T12	brown/natural			
	N12	carrera red			
11	999 073 155 09	tapping screw 4,2 X 13 for mount glove compartment		X	

Pos	Part Number	Description	Remark	Qty	Model
12	999 507 971 01	speed nut 4,2 for mount glove compartment		X	
13	999 507 732 01	clamp 8 X 12 /4 for mount glove compartment		X	
14	997 552 484 01	damper glove compartment		1	
15	997 552 612 00	cover damper		1	
16	997 552 410 01	release glove compartment	/LL	1	I098
17	996 552 915 01	lock cylinder glove compartment vehicle identification no. indicate		1	
18	999 703 068 40	buffer 3,7 x 10,3 glove compartment		2	
19	997 552 509 02	mounting closing element	/LL/L	1	I098
(19)	997 552 510 02	mounting closing element	/LL/R	1	I098
20	996 552 813 00	support pin		2	
21	996 552 879 00	adapter for damper		2	
22	997 612 651 00	wiring harness glove compartment light		1	
23	999 650 564 40	clip for wiring harness microswitch		1	
24	999 650 565 40	clip for wiring harness		1	
25	997 632 071 00	glove compartment light		1	

Pos	Part Number	Description	Remark	Qty	Model
26	997 552 252 03	glove compartment cover leather	/LL	1	I098/981
	A11	black			
	5X6	stone grey			
	8G2	sand beige			
	3S9	sea blue			
	9S5	terracotta			
	9V6	cocoa			
	D12	dark grey/natural			
	T12	brown/natural			
	N12	carrera red			
27	999 073 249 07	tapping screw 3.5 X 12 for mount glove compartment cover		11	
28	997 552 362 01	handle complete	/LL	1	I098/981
	A03	black			
	5V7	stone grey			
	5Z1	sand beige			
	8W7	sea blue			
	8X8	terracotta			
	8P9	cocoa			
	T13	brown/natural			
	N23	carrera red			
29	999 073 240 01	screw M 4 X 10 for mount handle		2	
30	997 552 448 00	stop		1	
31	997 552 663 00	box for cds		1	I424
32	999 073 240 01	screw M 4 X 10 for mount box for cds		2	
33	997 552 256 03	cover passenger's side leather	/LL	1	I098/981
	A11	black			
	5X6	stone grey			
	8G2	sand beige			
	3S9	sea blue			
	9S5	terracotta			
	9V6	cocoa			
	D12	dark grey/natural			
	T12	brown/natural			
	N12	carrera red			
(33)	997 552 255 03	cover passenger's side leather	/RL	1	I099/981
	A11	black			
	5X6	stone grey			
	8G2	sand beige			
	3S9	sea blue			
	9S5	terracotta			
	9V6	cocoa			
	D12	dark grey/natural			
	T12	brown/natural			
	N12	carrera red			
34	997 552 414 01	lining footwell passenger's side	/LL	1	I098
(34)	997 552 413 01	lining footwell passenger's side	/RL	1	I099

Pos	Part Number	Description	Remark	Qty	Model
35	1H0 819 943	screw for mount lining footwell		X	
36	997 552 451 01	insert	/LL	1	I098
37	997 552 649 01	hinge bolt glove compartment		2	
38	997 552 821 00	grommet		3	

Pos	Part Number	Description	Remark	Qty	Model

Model	Year	MG	SG	Illustration	Restrictions	UPD	20:27	06.02.2010	PORSCHE	PET	PORSCHE
997T2	2010	8	09	809-04		248	USA / CANADA				

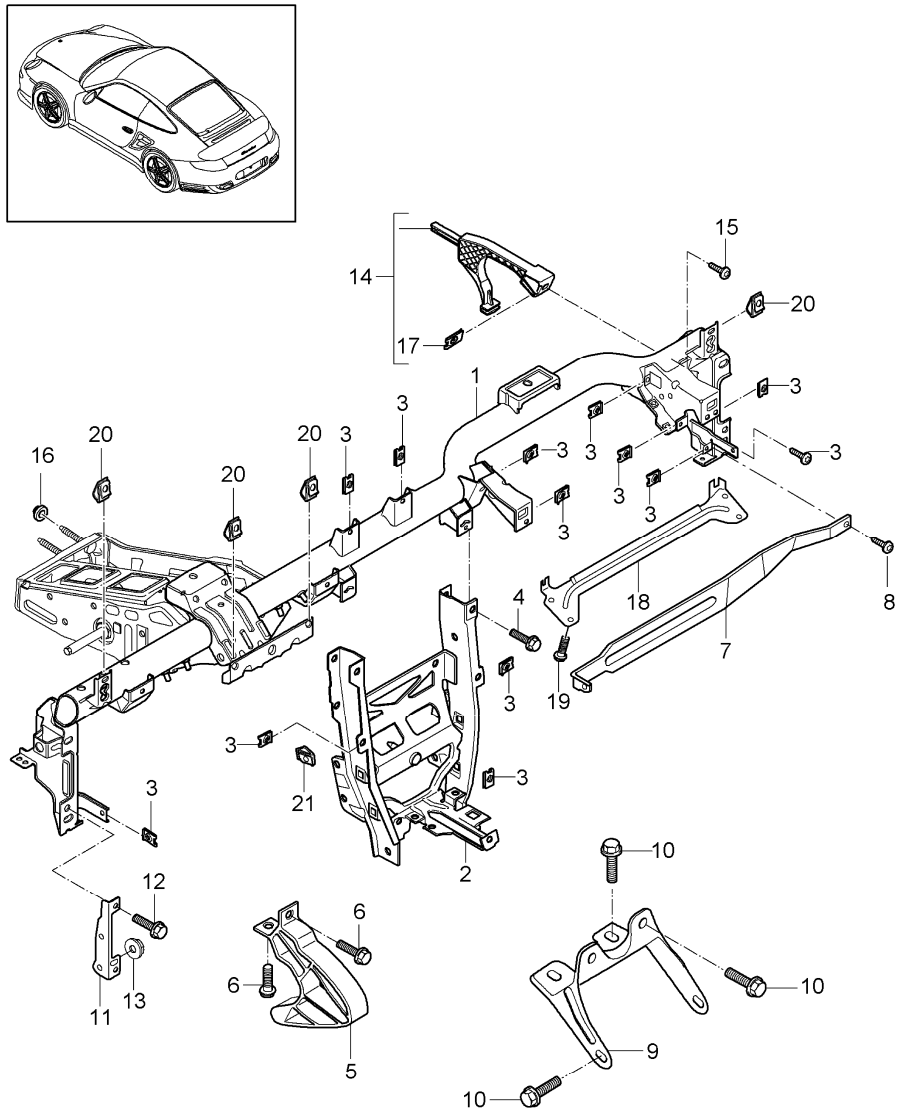

Pos	Part Number	Description	Remark	Qty	Model
		retaining frame dashboard			
(1)	997 552 063 09	retaining frame		1	I553
2	997 552 163 05	support tunnel	/LL	1	I098
3	999 507 020 01	speed nut ST 4,2		X	
4	900 378 305 01	hexagon-head bolt M 8 X 65 for mount support		2	
5	997 552 191 05	knee protection strip driver's side		2	I553
(5)	997 552 192 05	knee protection strip passenger's side		2	I553
6	900 378 036 09	hexagon-head bolt M 6 X 12 for mount knee protection strip		8	I553
7	997 552 764 05	reinforcement strip glove compartment		1	I553
8	999 073 155 09	tapping screw ST 4,2 X 13 for mount reinforcement strip		2	I553
9	997 552 515 01	support tunnel		1	
10	999 073 442 01	screw M 6 X 25 for mount support tunnel		X	
11	997 552 407 01	support a-pillar	/L	1	
(11)	997 552 408 01	support a-pillar	/R	1	

Pos	Part Number	Description	Remark	Qty	Model
12	900 378 176 01	hexagon-head bolt M 8 X 20 for mount support a-pillar		4	
13	999 084 630 09	hexagon nut M 8 for mount support a-pillar		4	
14	997 552 401 00	support heating		1	
15	999 073 155 09	tapping screw ST 4,2 X 13 for mount support heating		1	
16	997 423 299 01	nut for adjustment retaining frame firewall		2	
17	999 507 971 01	speed nut ST 4,2 for mount support heating		1	
18	997 552 603 01	reinforcement plate support airbag		1	
19	900 378 222 09	hexagon-head bolt M 6 X 16		4	
20	999 591 850 01	speed nut ST 4,2		X	
21	999 591 951 03	speed nut ST 4,2		X	

Model	Year	MG	SG	Illustration	Restrictions	UPD	20:27	06.02.2010
997T2	2010	8	09	809-10		248	USA / CANADA	

PORSCHE PET PORSCHE

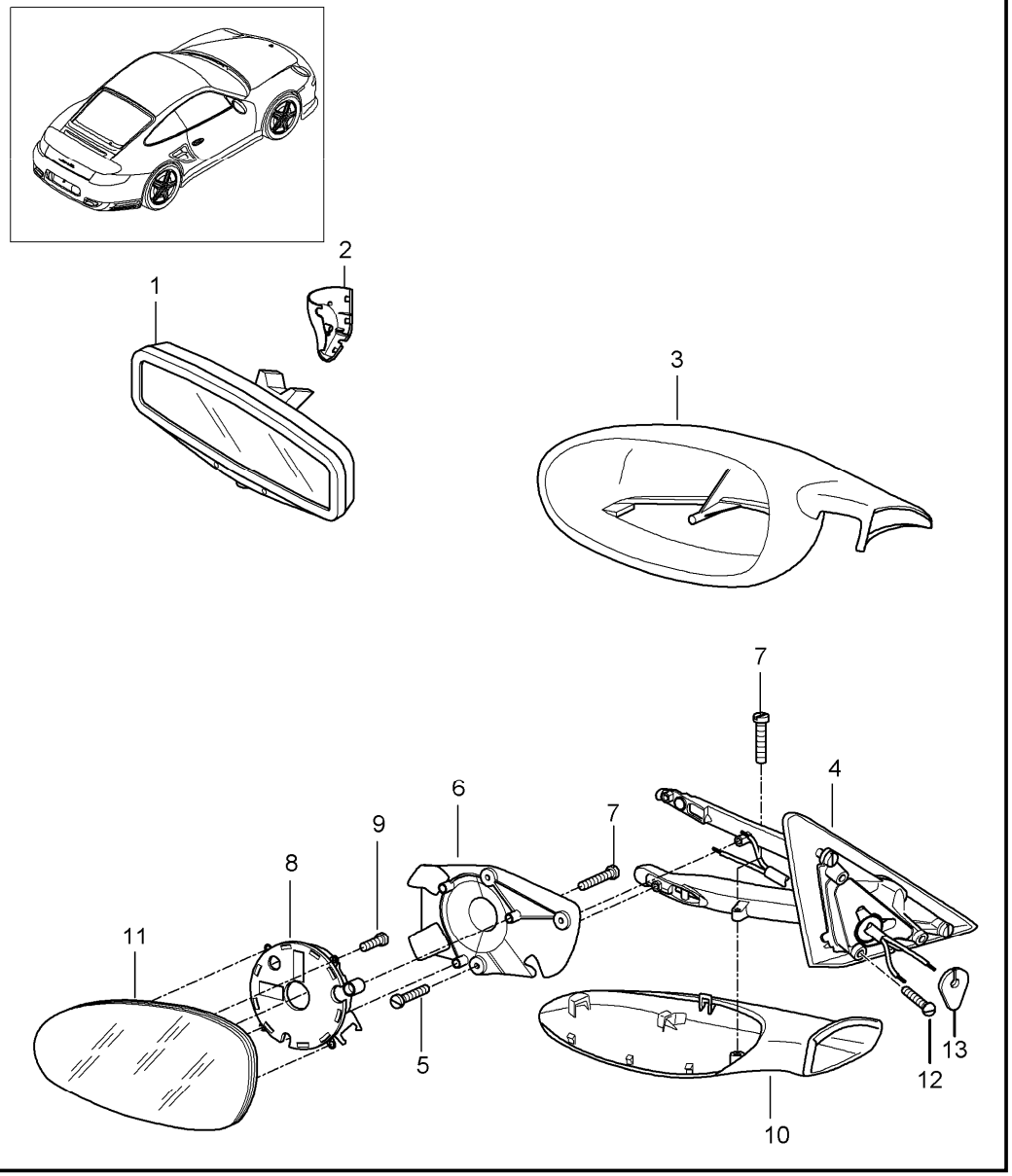

Pos	Part Number	Description	Remark	Qty	Model
		interior mirror door mirror			
1	997 731 511 05	interior mirror		1	I267
2	997 731 811 00	cover interior mirror	/L	1	
	01C	satin black			
(2)	997 731 812 00	cover interior mirror	/R	1	
	01C	satin black			
3	997 731 619 02	housing	/L	1	
	G2L	prime coated			
(3)	997 731 620 02	housing	/R	1	
	G2L	prime coated			
4	997 731 219 00	mirror base	/LL/L	1	I098
	G2L	prime coated			
(4)	997 731 220 00	mirror base door mirror	/LL/R	1	I098
	G2L	prime coated			
(4)	997 731 219 01	mirror base door mirror	/LL/L	1	I537
	G2L	prime coated			
(4)	997 731 220 01	mirror base door mirror	/LL/R	1	I537
	G2L	prime coated			
(4)	997 731 219 02	mirror base door mirror	/LL/L	1	I098/267
	G2L	prime coated			
(4)	997 731 220 02	mirror base door mirror	/LL/R	1	I098/267
	G2L	prime coated			
(4)	997 731 219 03	mirror base door mirror	/LL/L	1	I098/267/537
	G2L	prime coated			

Pos	Part Number	Description	Remark	Qty	Model
(4)	997 731 220 03	mirror base door mirror	/LL/R	1	I098/267/537
	G2L	prime coated			
5	999 919 024 09	oval-head screw 3,0 X 12		3	
6	997 731 519 00	plate door mirror	/L	1	
(6)	997 731 520 00	plate door mirror	/R	1	
7	999 141 043 02	oval-head screw M 3 X 14		4	
8	997 624 047 00	adjusting motor		2	
(8)	997 624 048 00	adjusting motor		2	I537/538
9	999 141 043 02	oval-head screw M 3,0 X 14		3	
10	997 731 719 02	cover lower	/L	1	
	G2L	prime coated			
(10)	997 731 720 02	cover lower	/R	1	
	G2L	prime coated			
11	997 731 035 06	mirror glass	/LL/L	1	I098/270
(11)	997 731 035 08	mirror glass plane	/LL/L	1	I098/267/270
(11)	997 731 035 07	mirror glass aspherical	/LL/L	1	I098/271
(11)	997 731 035 07	mirror glass aspherical	/LL/L	1	I098/271
(11)	997 731 035 09	mirror glass aspherical	/LL/L	1	I098/267/271
(11)	997 731 035 09	mirror glass aspherical	/LL/L	1	I098/267/271
(11)	997 731 038 09	mirror glass	/LL/R	1	I098
(11)	997 731 038 10	mirror glass	/LL/R	1	I553
(11)	997 731 038 12	mirror glass	/LL/R	1	I098/267
(11)	997 731 038 13	mirror glass	/LL/R	1	I267/553
12	999 073 345 09	lens-head screw M 5 X 18		3	
13	997 537 733 00	seal cable plug mirror base		1	

Model	Year	MG	SG	Illustration	Restrictions	UPD	20:27	06.02.2010	PORSCHE	PET	PORSCHE
997T2	2010	8	09	809-15		248	USA / CANADA				

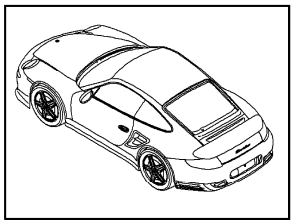

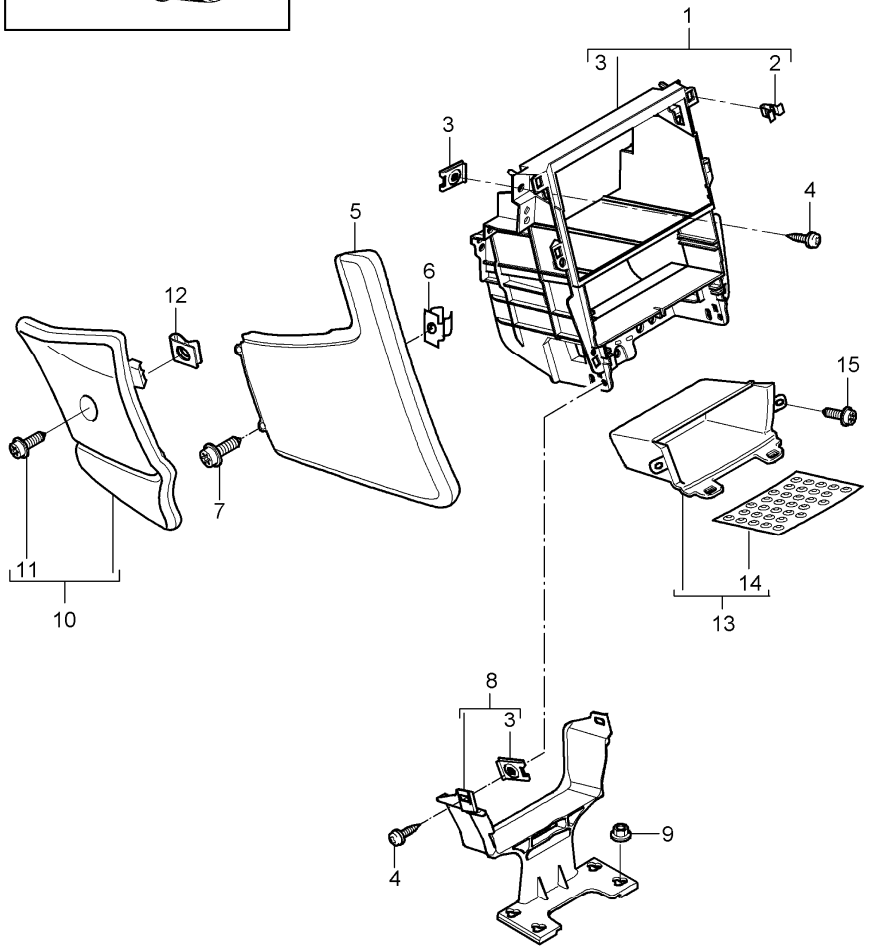

Pos	Part Number	Description	Remark	Qty	Model
		centre console front			
1	997 553 111 03	bracket centre console front		1	
2	999 507 476 01	clamp 8,0 X 10,0/2,5		6	
3	999 507 971 01	speed nut st 4,2		X	
4	999 073 155 09	tapping screw st 4,2 x 13		X	
5	997 553 117 06	cover lateral leather	/L	1	I981
	FSA	black/grey			
	FSB	stone grey/stone grey			
	FSC	sand beige/sand beige			
	FSD	sea blue/grey			
	FSF	terracotta/terracotta			
	FSG	cocoa/cocoa			
	FSH	darkgrey natural/grey			
	FSJ	brown nat./brown nat.			
	FSP	carrera red			
(5)	997 553 118 06	cover lateral leather	/R	1	I981
	FSA	black/grey			
	FSB	stone grey/stone grey			
	FSC	sand beige/sand beige			
	FSD	sea blue/grey			
	FSF	terracotta/terracotta			
	FSG	cocoa/cocoa			
	FSH	darkgrey natural/grey			
	FSJ	brown nat./brown nat.			

Pos	Part Number	Description	Remark	Qty	Model
	FSP	carrera red			
		cover lateral with preparation for telephone see group 9/11/10		1	
6	999 591 508 01	captive nut st 4,2 for mount cover lateral		4	
7	999 073 226 09	tapping screw ST 4,2 X 16 for mount cover lateral		4	
8	997 553 361 01	support centre		1	
9	999 084 629 01	hexagon nut M 6		4	
10	997 553 131 01	cover footwell outlet vent carpet	/L	1	I098
	A10	black			
	B10	stone grey			
	T10	sand beige			
	E10	sea blue			
	M10	terracotta			
	R10	cocoa			
	D11	dark grey/natural			
	T11	brown/natural			
(10)	997 553 132 01	cover footwell outlet vent carpet	/LL/R	1	I098/621
	A10	black			
	B10	stone grey			
	T10	sand beige			
	E10	sea blue			
	M10	terracotta			
	R10	cocoa			
	D11	dark grey/natural			
	T11	brown/natural			
	N10	carrera red			
(10)	997 553 132 02	cover footwell outlet vent carpet	LL/R	1	I098
	A10	black			
	B10	stone grey			
	T10	sand beige			
	E10	sea blue			
	M10	terracotta			
	R10	cocoa			
	D11	dark grey/natural			
	T11	brown/natural			
	N10	carrera red			
11	999 073 223 07	oval-head screw M 6 X 25 for mount cover footwell outlet vent		2	
12	999 507 766 02	speed nut M 6 for mount cover footwell outlet vent		2	
13	997 553 143 02	shelf centre console front		1	
	A05	black			

Pos	Part Number	Description	Remark	Qty	Model
14	997 553 543 01	insert shelf		1	
15	999 919 164 09	oval-head screw 5,0 X 12,0 for mount shelf		3	

Pos	Part Number	Description	Remark	Qty	Model

Model	Year	MG	SG	Illustration	Restrictions	UPD	20:28	06.02.2010	PORSCHE	PET	PORSCHE
997T2	2010	8	09	809-20		248	USA / CANADA				

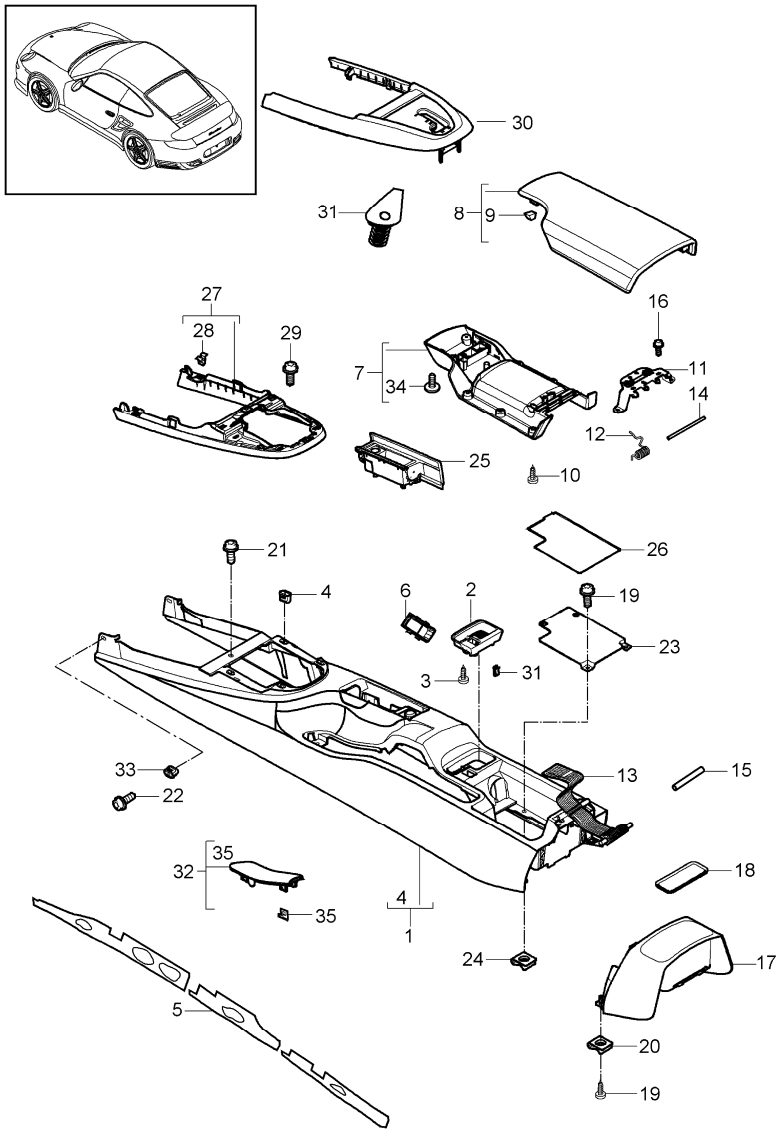

Pos	Part Number	Description	Remark	Qty	Model
		centre console rear			
(1)	997 553 901 01	centre console		1	COUPE I560
	A03	black			
	5V7	stone grey			
	5Z1	sand beige			
	8W7	sea blue			
	8X8	terracotta			
	8P9	cocoa			
	T13	brown/natural			
	N23	carrera red			
(1)	997 553 901 03	centre console		1	CABRIO I560
	A03	black			
	5V7	stone grey			
	5Z1	sand beige			
	8W7	sea blue			
	8X8	terracotta			
	8P9	cocoa			
	T13	brown/natural			
	N23	carrera red			
(1)	997 553 980 69	centre console		1	COUPE IXMZ
		leather			
	A11	black			
	5X6	stone grey			
	8G2	sand beige			
	3S9	sea blue			
	9S5	terracotta			
	9V6	cocoa			

Pos	Part Number	Description	Remark	Qty	Model
	D12	dark grey/natural			
	T12	brown/natural			
	N12	carrera red			
(1)	997 553 980 70	centre console		1	COUPE IXMZ/560
		leather			
	A11	black			
	5X6	stone grey			
	8G2	sand beige			
	3S9	sea blue			
	9S5	terracotta			
	9V6	cocoa			
	D12	dark grey/natural			
	T12	brown/natural			
	N12	carrera red			
(1)	997 553 980 71	centre console		1	CABRIO IXMZ
		leather			
	A11	black			
	5X6	stone grey			
	8G2	sand beige			
	3S9	sea blue			
	9S5	terracotta			
	9V6	cocoa			
	D12	dark grey/natural			
	T12	brown/natural			
	N12	carrera red			
(1)	997 553 980 72	centre console		1	CABRIO IXMZ/560
		leather			
	A11	black			
	5X6	stone grey			

Pos	Part Number	Description	Remark	Qty	Model
	8G2	sand beige			
	3S9	sea blue			
	9S5	terracotta			
	9V6	cocoa			
	D12	dark grey/natural			
	T12	brown/natural			
	N12	carrera red			
(1)	997 553 980 52	centre console		1	COUPE IXMJ
		carbon			
	A35	black			
(1)	997 553 980 53	centre console		1	COUPE IXMJ/560
		carbon			
	A35	black			
(1)	997 553 980 54	centre console		1	CABRIO IXMJ
		carbon			
	A35	black			
(1)	997 553 980 55	centre console		1	CABRIO IXMJ/560
		carbon			
	A35	black			
(1)	997 553 980 56	centre console		1	COUPE IXJT
	S61	macassar			
(1)	997 553 980 57	centre console		1	COUPE IXJT/560
	S61	macassar			
(1)	997 553 980 58	centre console		1	CABRIO IXJT
	S61	macassar			
(1)	997 553 980 59	centre console		1	CABRIO IXJT/560
	S61	macassar			

Pos	Part Number	Description	Remark	Qty	Model
(1)	997 553 980 60	centre console		1	COUPE IXCK
	V04	galvano silver			
(1)	997 553 980 61	centre console		1	COUPE IXCK/560
	V04	galvano silver			
(1)	997 553 980 62	centre console		1	CABRIO IXCK
	V04	galvano silver			
(1)	997 553 980 63	centre console		1	CABRIO IXCK/560
	V04	galvano silver			
(1)	997 553 980 64	centre console		1	COUPE IXME
	041	black			
	84A	guards red			
	12H	speed yellow			
	B9A	carrara white			
	92U	arctic silver metallic			
	C9Z	basalt black metallic			
	M7X	atlas grey metallic			
	39C	midnight blue metallic			
	M7W	Meteor Grey Metallic			
	M8W	Macadamia Metallic			
	M3X	ruby red metallic			
	M5X	Dark Blue Metallic			
	22G	Racing Green Metallic			
	M5R	Aqua Blue Metallic			
	51A	creamy white			
	M2Z	Nordic Gold Metallic			
	M7Z	gt silver metallic			
	2B5	Malachite Green Metallic			
(1)	997 553 980 65	centre console		1	COUPE IXME/560
	041	black			
	84A	guards red			
	12H	speed yellow			
	B9A	carrara white			
	92U	arctic silver metallic			
	C9Z	basalt black metallic			
	M7X	atlas grey metallic			
	39C	midnight blue metallic			
	M7W	Meteor Grey Metallic			
	M8W	Macadamia Metallic			
	M3X	ruby red metallic			
	M5X	Dark Blue Metallic			
	22G	Racing Green Metallic			
	M5R	Aqua Blue Metallic			
	51A	creamy white			
	M2Z	Nordic Gold Metallic			
	M7Z	gt silver metallic			
	2B5	Malachite Green Metallic			
(1)	997 553 980 66	centre console		1	CABRIO IXME
	041	black			
	84A	guards red			
	12H	speed yellow			
	B9A	carrara white			
	92U	arctic silver metallic			
	C9Z	basalt black metallic			
	M7X	atlas grey metallic			

Pos	Part Number	Description	Remark	Qty	Model
	39C	midnight blue metallic			
	M7W	Meteor Grey Metallic			
	M8W	Macadamia Metallic			
	M3X	ruby red metallic			
	M5X	Dark Blue Metallic			
	22G	Racing Green Metallic			
	M5R	Aqua Blue Metallic			
	51A	creamy white			
	M2Z	Nordic Gold Metallic			
	M7Z	gt silver metallic			
	2B5	Malachite Green Metallic			
(1)	997 553 980 67	centre console		1	CABRIO IXME/560
	041	black			
	84A	guards red			
	12H	speed yellow			
	B9A	carrara white			
	92U	arctic silver metallic			
	C9Z	basalt black metallic			
	M7X	atlas grey metallic			
	39C	midnight blue metallic			
	M7W	Meteor Grey Metallic			
	M8W	Macadamia Metallic			
	M3X	ruby red metallic			
	M5X	Dark Blue Metallic			
	22G	Racing Green Metallic			
	M5R	Aqua Blue Metallic			
	51A	creamy white			
	M2Z	Nordic Gold Metallic			

Pos	Part Number	Description	Remark	Qty	Model
	M7Z	gt silver metallic			
	2B5	Malachite Green Metallic			
(1)	997 553 997 01	protective film centre console see technical manual 681749		2	
2	997 553 575 02	insert locking device centre console		1	
	01C	satin black			
3	999 919 159 09	oval-head screw 4 X 12 for mount insert locking device		1	
4	999 591 210 40	expander nut 4,2		4	
5	997 553 843 00	sound absorber	/L	1	
(5)	997 553 844 00	sound absorber	/R	1	
7	997 553 433 01	lid inner		1	
	01C	satin black			
8	997 553 231 01	lid outer leather		1	TURBO
	A11	black			
	5X6	stone grey			
	8G2	sand beige			
	3S9	sea blue			
	9S5	terracotta			
	9V6	cocoa			
	D12	dark grey/natural			
	T12	brown/natural			
	N12	carrera red			

Pos	Part Number	Description	Remark	Qty	Model
(8)	997 553 991 05	lid outer with porsche crest		1	TURBO IXPT
	A11	black			
	5X6	stone grey			
	8G2	sand beige			
	3S9	sea blue			
	9S5	terracotta			
	9V6	cocoa			
	D12	dark grey/natural			
	T12	brown/natural			
	N12	carrera red			
(8)	997 553 991 29	lid outer with logo turbo	/LL	1	TURBO IXUV/098
	A11	black			
	5X6	stone grey			
	8G2	sand beige			
	3S9	sea blue			
	9S5	terracotta			
	9V6	cocoa			
	D12	dark grey/natural			
	T12	brown/natural			
	N12	carrera red			
(8)	997 553 991 20	lid outer alcantara	/LL	1	IXLG/098
	A25	black			

Pos	Part Number	Description	Remark	Qty	Model
9	999 507 972 01	speed nut 3,5 3,5 X 14 for mount lid outer		8	
10	999 073 153 01	tapping screw 3,5 X 14 for mount lid outer		8	
11	997 553 437 01	hinge		1	
12	997 553 439 00	steering knuckle spring		1	
13	997 553 441 00	belt		1	
14	997 553 447 00	axle		1	
15	997 553 733 00	retaining pin		1	
16	999 919 159 09	oval-head screw M4X12		X	
17	997 553 221 01	extension centre console lacquered		1	COUPE/TURBO
	A03	black			
	5V7	stone grey			
	5Z1	sand beige			
	8W7	sea blue			
	8X8	terracotta			
	8P9	cocoa			
	T13	brown/natural			
	N23	carrera red			
(17)	997 553 983 00	extension centre console leather		1	COUPE/TURBO IXMZ
	A11	black			
	5X6	stone grey			

Pos	Part Number	Description	Remark	Qty	Model
	8G2	sand beige			
	3S9	sea blue			
	9S5	terracotta			
	9V6	cocoa			
	D12	dark grey/natural			
	T12	brown/natural			
	N12	carrera red			
(17)	997 553 983 01	extension		1	COUPE/TURBO IXMJ
		centre console leather			
	A11	black			
	5X6	stone grey			
	8G2	sand beige			
	3S9	sea blue			
	9S5	terracotta			
	9V6	cocoa			
	D12	dark grey/natural			
	T12	brown/natural			
	N12	carrera red			
(17)	997 553 983 03	extension		1	COUPE/TURBO IXJT
		centre console leather			
	A11	black			
	5X6	stone grey			
	8G2	sand beige			
	3S9	sea blue			
	9S5	terracotta			
	9V6	cocoa			
	D12	dark grey/natural			
	T12	brown/natural			

Pos	Part Number	Description	Remark	Qty	Model
	N12	carrera red			
(17)	997 553 983 04	extension		1	COUPE/TURBO IXCK
		centre console leather			
	A11	black			
	5X6	stone grey			
	8G2	sand beige			
	3S9	sea blue			
	9S5	terracotta			
	9V6	cocoa			
	D12	dark grey/natural			
	T12	brown/natural			
	N12	carrera red			
(17)	997 553 983 05	extension		1	COUPE/TURBO IXME
		centre console lacquered			
	041	black			
	84A	guards red			
	12H	speed yellow			
	B9A	carrara white			
	92U	arctic silver metallic			
	C9Z	basalt black metallic			
	M7X	atlas grey metallic			
	39C	midnight blue metallic			
	M7W	Meteor Grey Metallic			
	M8W	Macadamia Metallic			
	M3X	ruby red metallic			
	M5X	Dark Blue Metallic			
	22G	Racing Green Metallic			
	M5R	Aqua Blue Metallic			

Pos	Part Number	Description	Remark	Qty	Model
	51A	creamy white			
	M2Z	Nordic Gold Metallic			
	M7Z	gt silver metallic			
	2B5	Malachite Green Metallic			
18	997 553 625 01	insert extension		1	COUPE/TURBO
19	999 073 226 09	tapping screw 4,2 X 16		X	
20	999 507 020 01	speed nut 4,2		X	
21	999 919 121 09	oval-head screw 5 X 16		2	
22	999 073 155 09	tapping screw 4,2 X 13		2	
23	997 553 615 01	floor centre console		1	
24	999 507 028 01	speed nut 4,2		X	
25	997 553 902 00	ashtray lacquered		1	
	A03	black			
	5V7	stone grey			
	5Z1	sand beige			
	8W7	sea blue			
	8X8	terracotta			
	8P9	cocoa			
	T13	brown/natural			
	N23	carrera red			
(25)	997 553 982 06	ashtray leather		1	IXMZ
	A11	black			
	5X6	stone grey			
	8G2	sand beige			
	3S9	sea blue			
	9S5	terracotta			
	9V6	cocoa			
	D12	dark grey/natural			
	T12	brown/natural			
	N12	carrera red			
(25)	997 553 982 01	ashtray carbon		1	IXMJ
	A35	black			
(25)	997 553 982 03	ashtray		1	IXJT
	S61	macassar			
(25)	997 553 982 04	ashtray aluminium look		1	IXCK
	V04	galvano silver			
(25)	997 553 982 05	ashtray lacquered		1	IXME
	041	black			
	84A	guards red			
	12H	speed yellow			
	B9A	carrara white			
	92U	arctic silver metallic			
	C9Z	basalt black metallic			
	M7X	atlas grey metallic			
	39C	midnight blue metallic			
	M7W	Meteor Grey Metallic			
	M8W	Macadamia Metallic			
	M3X	ruby red metallic			
	M5X	Dark Blue Metallic			
	22G	Racing Green Metallic			
	M5R	Aqua Blue Metallic			

Pos	Part Number	Description	Remark	Qty	Model
	51A	creamy white			
	M2Z	Nordic Gold Metallic			
	M7Z	gt silver metallic			
	2B5	Malachite Green Metallic			
26	997 553 611 01	insert		1	
(26)	997 553 613 00	insert		1	I870
27	997 553 261 06	frame lacquered		1	Turbo
	V04	galvano silver			
(27)	987 553 261 01	frame	10-	1	Turbo IXDJ
	G2X	prime coated			
28	999 507 533 02	clamp 8,0 X 10,0/2,5		7	
29	999 073 155 09	tapping screw 4,2 X 13 for mount frame		4	
30	997 553 245 01	cover		1	Turbo I250
		shift gate			
	FUG	Black/Galvano Silver			
	FUH	Stone Grey/Galvano Silver			
	FUJ	Sand Beige/Galvano Silver			
	FUK	Ocean Blue/Galvano Silver			
	FUL	Terracotta/Galvano Silver			
	FUM	Cocoa/Galvano Silver			
	FUN	Natural Brown/Galvano Silver			
	FU0	Carrera Red/Galvano Silver			
(30)	997 553 987 00	cover shift gate lacquered		1	IXWS/250
	041	black			
	84A	guards red			
	12H	speed yellow			
	B9A	carrara white			
	92U	arctic silver metallic			
	C9Z	basalt black metallic			
	M7X	atlas grey metallic			
	39C	midnight blue metallic			
	M7W	Meteor Grey Metallic			
	M8W	Macadamia Metallic			
	M3X	ruby red metallic			
	M5X	Dark Blue Metallic			
	22G	Racing Green Metallic			
	M5R	Aqua Blue Metallic			
	51A	creamy white			
	M2Z	Nordic Gold Metallic			
	M7Z	gt silver metallic			
	2B5	Malachite Green Metallic			
(30)	997 553 987 00	cover shift gate lacquered		1	IXWT/250
	041	black			
(30)	997 553 987 01	cover shift gate		1	IXWR/250
	V04	galvano silver			
(30)	997 553 987 02	cover shift gate leather		1	IXWU/250
	A11	black			
	5X6	stone grey			
	8G2	sand beige			
	3S9	sea blue			

Pos	Part Number	Description	Remark	Qty	Model
	9S5	terracotta			
	9V6	cocoa			
	D12	dark grey/natural			
	T12	brown/natural			
	N12	carrera red			
(30)	997 553 243 01	cover shift gate lacquered		1	I480
	A03	black			
	5V7	stone grey			
	5Z1	sand beige			
	8W7	sea blue			
	8X8	terracotta			
	8P9	cocoa			
	T13	brown/natural			
	N23	carrera red			
(30)	997 553 996 00	cover shift gate leather		1	Turbo IXDZ/480
	A11	black			
	5X6	stone grey			
	8G2	sand beige			
	3S9	sea blue			
	9S5	terracotta			
	9V6	cocoa			
	D12	dark grey/natural			
	T12	brown/natural			
	N12	carrera red			
31	999 507 922 01	u-clamp 4,0		1	I870
32	997 553 903 00	cover parking-brake lever lacquered		1	
	A03	black			
	5V7	stone grey			
	5Z1	sand beige			
	8W7	sea blue			
	8X8	terracotta			
	8P9	cocoa			
	T13	brown/natural			
	N23	carrera red			
(32)	997 553 981 00	cover parking-brake lever		1	IXCK
	A11	black			
	5X6	stone grey			
	8G2	sand beige			
	3S9	sea blue			
	9S5	terracotta			
	9V6	cocoa			
	D12	dark grey/natural			
	T12	brown/natural			
	N12	carrera red			
(32)	997 553 981 00	cover parking-brake lever		1	IXJT
	A11	black			
	5X6	stone grey			
	8G2	sand beige			
	3S9	sea blue			
	9S5	terracotta			
	9V6	cocoa			
	D12	dark grey/natural			

Pos	Part Number	Description	Remark	Qty	Model
	T12	brown/natural			
	N12	carrera red			
(32)	997 553 981 00	cover parking-brake lever		1	IXME
	A11	black			
	5X6	stone grey			
	8G2	sand beige			
	3S9	sea blue			
	9S5	terracotta			
	9V6	cocoa			
	D12	dark grey/natural			
	T12	brown/natural			
	N12	carrera red			
(32)	997 553 981 00	cover parking-brake lever		1	IXMJ
	A11	black			
	5X6	stone grey			
	8G2	sand beige			
	3S9	sea blue			
	9S5	terracotta			
	9V6	cocoa			
	D12	dark grey/natural			
	T12	brown/natural			
	N12	carrera red			
(32)	997 553 981 07	cover parking-brake lever		1	IXMZ
	A11	black			
	5X6	stone grey			
	8G2	sand beige			
	3S9	sea blue			
	9S5	terracotta			
	9V6	cocoa			
	D12	dark grey/natural			
	T12	brown/natural			
	N12	carrera red			
33	999 591 215 40	expander nut 4,2		2	
34	997 553 732 00	rubber buffer lid inner		2	
35	997 553 861 00	clamp		4	IXMZ

Model	Year	MG	SG	Illustration	Restrictions	UPD	20:28	06.02.2010
997T2	2010	8	10	810-00		248	USA / CANADA	

PORSCHE PET PORSCHE

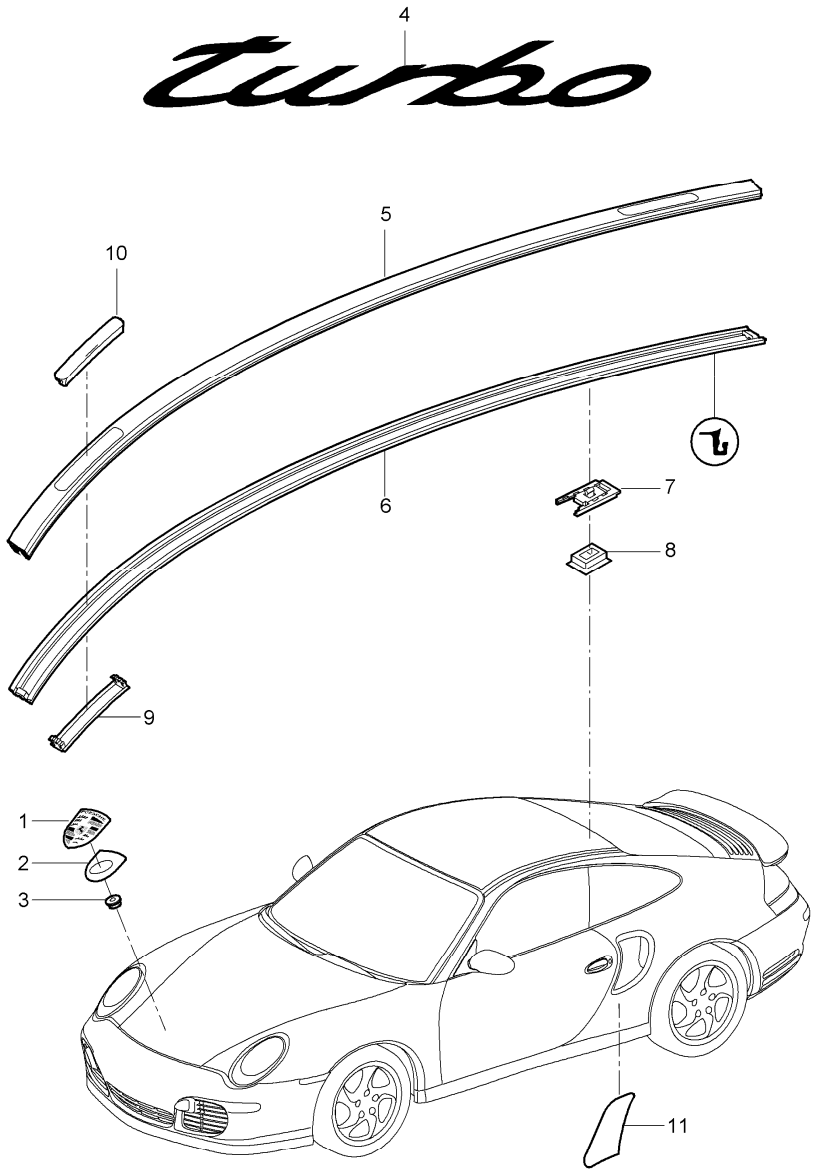

Pos	Part Number	Description	Remark	Qty	Model
		insignias decorative fittings stone guard film			
1	997 559 211 00	lid emblem Information available		1	
(1)	997 559 911 00	lid emblem		1	
2	7L5 853 611 B	desk pad		1	
3	999 591 423 03	tapping nut		2	
4	997 559 237 03	logo *Turbo*		1	TURBO
5	997 559 401 00	roof edge strip	/L	1	
	G2X	prime coated			
(5)	997 559 402 00	roof edge strip	/R	1	
	G2X	prime coated			
6	997 559 721 00	gasket roof edge strip	/L	1	
(6)	997 559 722 00	gasket roof edge strip	/R	1	
7	996 559 403 01	clip		10	
8	996 559 405 01	adapter		10	
9	996 559 729 00	bracket for flap		4	
10	996 559 501 00	flap front		2	
	G2X	prime coated			
(10)	996 559 503 00	flap rear		2	
	G2X	prime coated			
11	997 504 825 03	stone guard film side section	/L	1	
(11)	997 504 826 03	stone guard film side section	/R	1	

Model	Year	MG	SG	Illustration	Restrictions	UPD	20:28	06.02.2010
997T2	2010	8	10	810-05		248	USA / CANADA	

PORSCHE PET PORSCHE

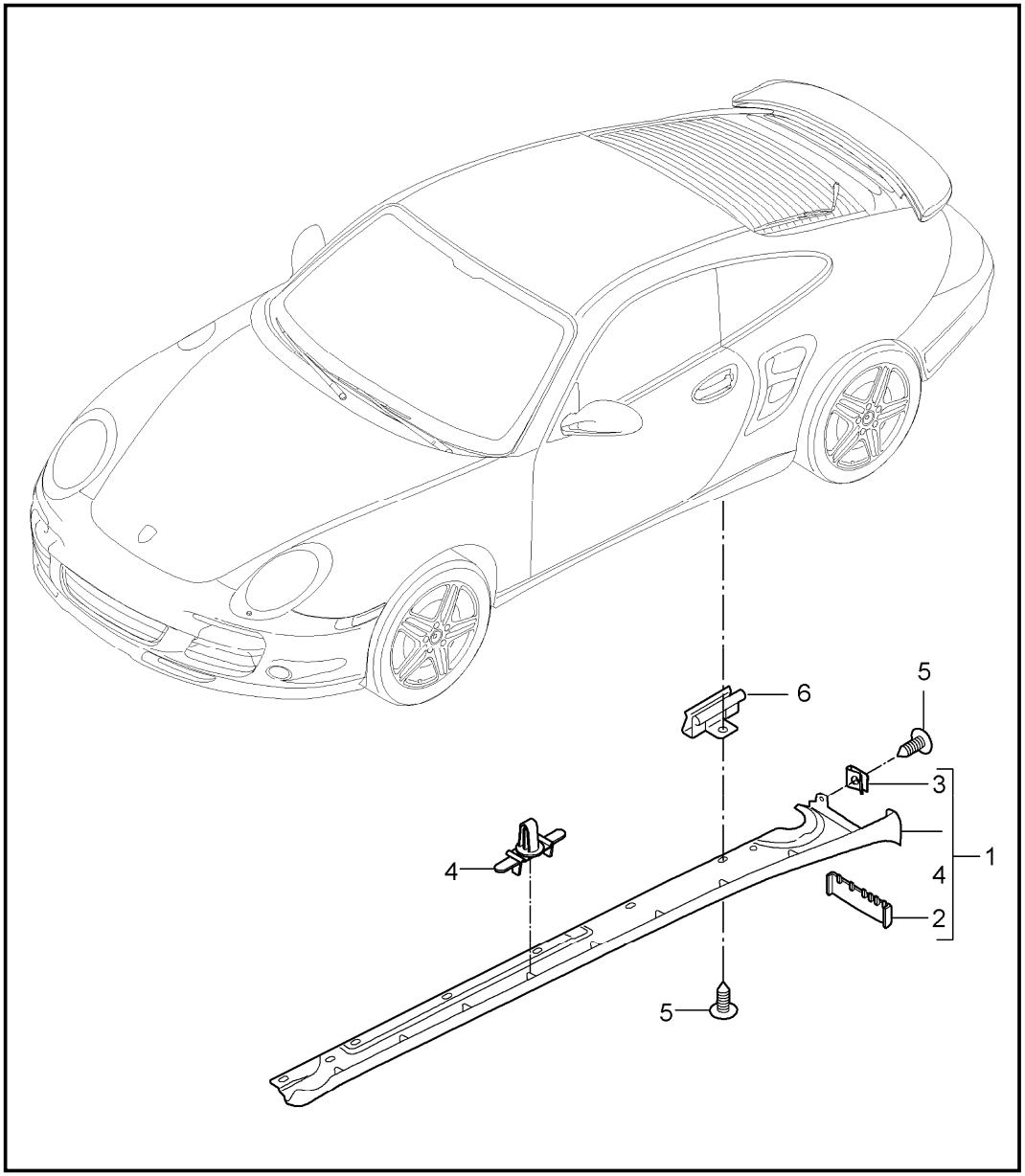

Pos	Part Number	Description	Remark	Qty	Model
		sill cover outer			
1	997 504 363 00	sill cover	/L	1	TURBO
	01C	satin black			
(1)	997 504 364 00	sill cover	/R	1	TURBO
	01C	satin black			
1	997 504 981 00	sill cover	/L	1	TURBO IXAJ
	G2X	prime coated			
(1)	997 504 982 00	sill cover	/R	1	TURBO IXAJ
	G2X	prime coated			
2	997 504 863 00	rubber lip sill cover	/L	1	TURBO
	01C	satin black			
(2)	997 504 864 00	rubber lip sill cover	/R	1	TURBO
	01C	satin black			
3	999 507 795 09	speed nut ST 4,8		4	
4	999 507 986 40	fixing clip sill cover 9,0 x 1,5		18	
5	999 073 505 01	tapping screw 4,8 X 16		20	
6	999 507 640 09	u-clamp		18	

Model	Year	MG	SG	Illustration	Restrictions	UPD	20:28	06.02.2010
997T2	2010	8	11	811-00		248	USA / CANADA	

PORSCHE PET PORSCHE

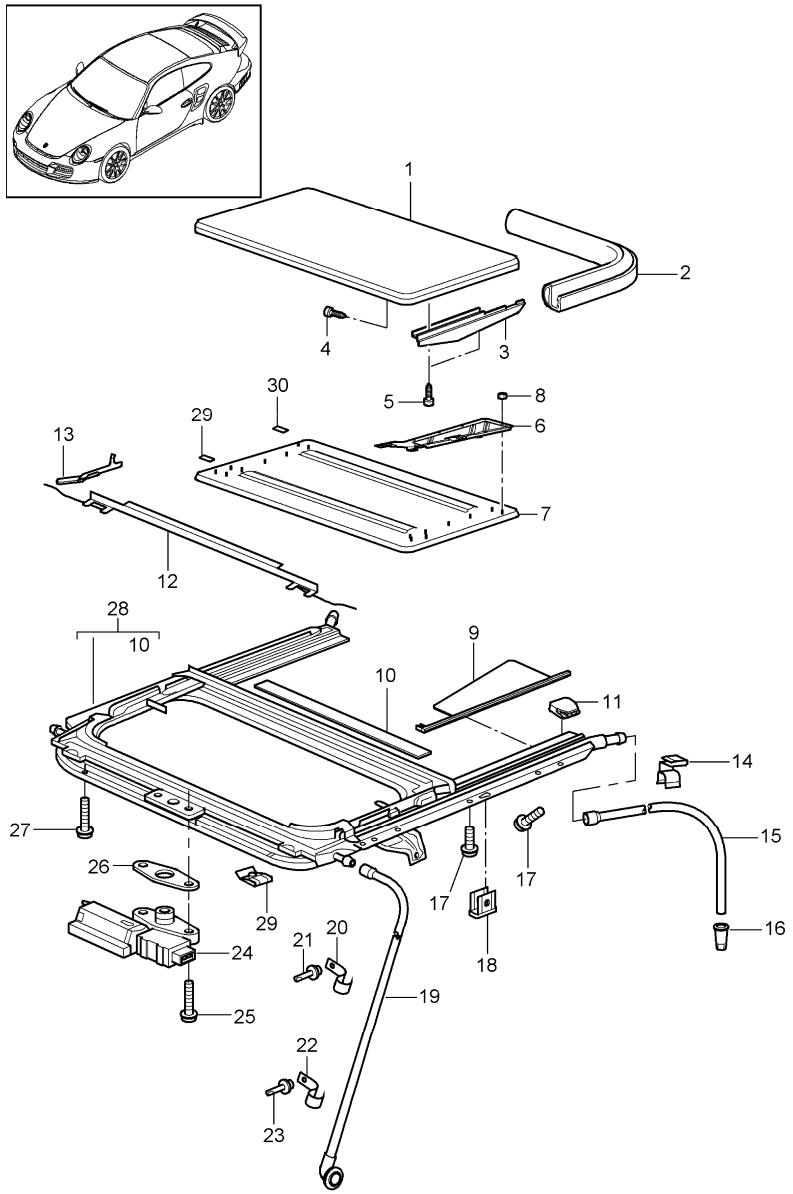

Pos	Part Number	Description	Remark	Qty	Model
		sunroof			I650
1	996 564 941 01	lid		1	
	GRV	prime coated			
2	997 564 211 00	gasket		1	
3	997 564 181 00	cover	/L	1	
	01C	black			
(3)	997 564 182 00	cover	/R	1	
	01C	black			
4	996 564 245 00	combination screw		4	
5	900 143 189 09	tapping screw		4	
6	996 564 321 01	guide plate	/L	1	
(6)	996 564 322 01	guide plate	/R	1	
7	997 564 021 00	roofliner alcantara		1	
	A14	black			
	B14	stone grey			
	G14	metropole blue			
	T44	sand beige			
(7)	996 564 983 00	roofliner leather		1	
	A11	black			
	5X6	stone grey			
	8G2	sand beige			
	3S9	sea blue			
	9S5	terracotta			
	D12	dark grey/natural			
	T12	natural brown			
	9V6	cocoa			
	N12	carrera red			
8	900 076 084 02	nut		16	

Pos	Part Number	Description	Remark	Qty	Model
9	997 564 241 00	interior lining	/L	1	
(9)	997 564 242 00	interior lining	/R	1	
10	997 564 671 00	edge protection		1	
11	997 555 823 00	support		2	
12	997 564 161 00	air deflector		1	
13	996 564 522 01	hinge	/R	1	
(13)	996 564 521 01	hinge	/L	1	
14	999 507 631 01	cable holder		4	
15	996 564 205 01	water drain hose rear		2	
16	996 561 825 00	water drain valve rear		2	
17	999 073 279 02	oval-head screw		6	
18	999 703 258 42	clip		2	
19	996 564 207 00	water drain hose front		2	
20	997 564 301 00	support upper		2	
21	999 190 190 01	blind rivet 4,0X8,5		2	
22	997 564 303 00	support lower		2	
23	999 190 445 37	blind rivet 4,0X6,3		1	
24	997 624 213 00	driving mechanism		1	
25	999 073 135 01	countersunk-head screw		2	
26	996 564 213 00	spacer		1	
27	999 073 366 02	oval-head screw		4	
28	997 564 911 00	frame without driving mechanism		1	
29	997 564 903 00	damping piece front		3	
30	997 564 905 00	damping piece rear		3	

Model	Year	MG	SG	Illustration	Restrictions	UPD	20:28	06.02.2010	PET
997T2	2010	8	11	811-05		248	USA / CANADA		

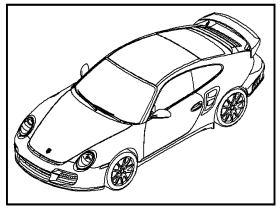

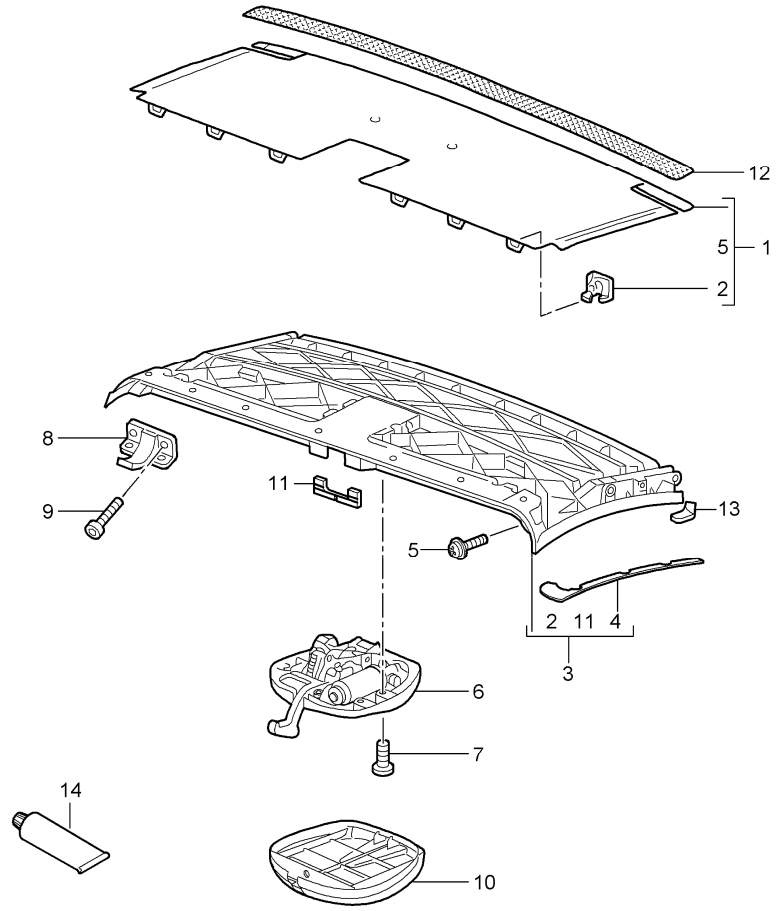

Pos	Part Number	Description	Remark	Qty	Model
		convertible top frame front roof frame catch lubricants			Cabrio
1	996 561 963 00	base including felt		1	
2	996 561 731 00	clip		6	
3	997 561 905 00	roof frame		1	
	A09	black			
		use also:			
-	997 561 509 00	felt strip 60 x 25 see tpi group 8 Nummer 53		1	
4	996 561 807 00	gasket roof frame plastic foam strip	/L	1	
(4)	996 561 808 00	gasket roof frame plastic foam strip	/R	1	
5	999 507 497 40	expansion rivet		6	
6	997 561 117 01	catch		1	
7	999 073 195 01	oval-head screw M6x20		4	
8	997 561 605 00	centring journal	/L	1	
(8)	997 561 606 00	centring journal	/R	1	
9	999 919 144 09	oval-head screw		4	
10	997 561 515 00	trim cover		1	
	01C	black			
11		buffer see illustrations 8-11-09		1	
12	000 043 207 44	felt strip 30 mm x 5 Meter		1	
13	997 561 827 00	foam part	/L	1	

Pos	Part Number	Description	Remark	Qty	Model
(13)	997 561 828 00	foam part	/R	1	
14	000 043 206 65	grease Krytox 1 tube 56 Gramm		X	
(14)	000 043 206 83	grease Optitemp LG2 1 tube 80 Gramm		X	
(14)	999 917 557 00	grease Osixo 30 ml		X	

Pos	Part Number	Description	Remark	Qty	Model

Model	Year	MG	SG	Illustration	Restrictions	UPD	20:29	06.02.2010	PORSCHE	PET	PORSCHE
997T2	2010	8	11	811-10		248	USA / CANADA				

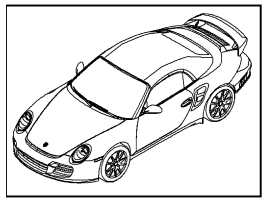

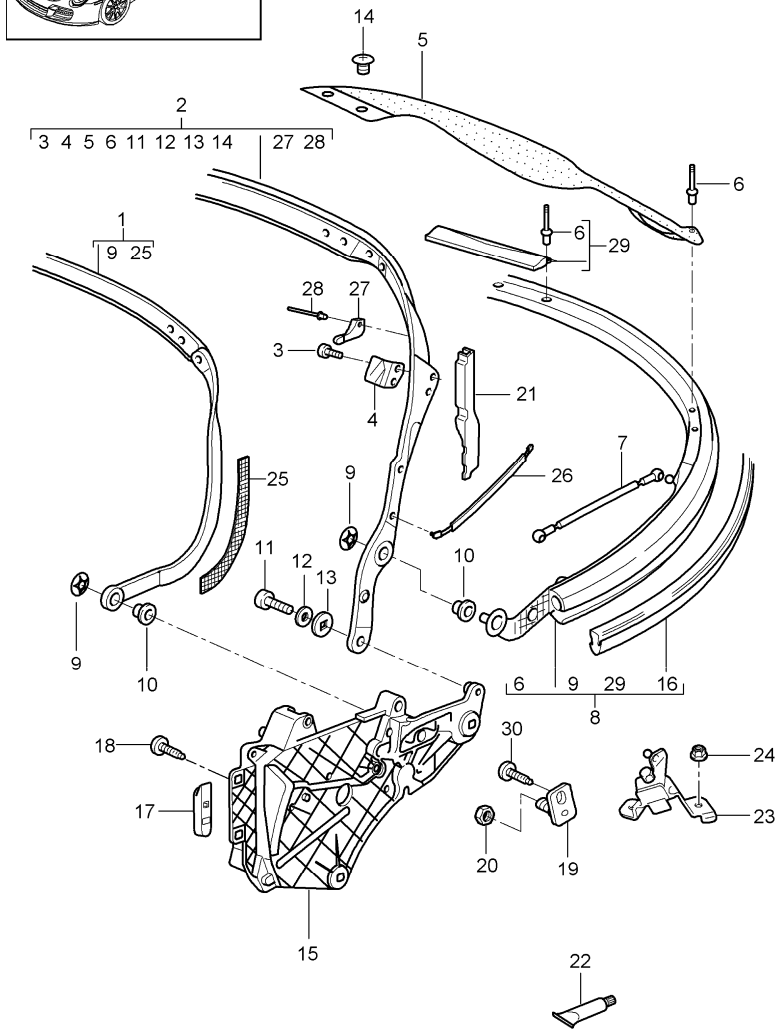

Pos	Part Number	Description	Remark	Qty	Model
		convertible top frame single parts			Cabrio
1	997 561 942 00	roof strut		1	
2	997 561 931 00	main folding top bow set		1	
3	900 146 003 03	oval-head screw		4	
4	996 561 959 00	thrust wedge		2	
5	997 561 089 02	restraining strap	/L	1	
(5)	997 561 090 02	restraining strap	/R	1	
6	999 190 446 30	blind rivet		X	
7	996 561 191 00	tension rope lower		2	
8	997 561 941 00	roof strut with buffer		1	
9	996 561 645 00	lock		8	
10	999 924 122 40	bush		8	
11	999 073 195 01	round head screw M6 X 20		2	
12	900 151 006 03	washer 6,4		2	
13	999 924 131 30	washer 8,5 X 28 X 2		2	
14	999 919 141 09	oval-head screw M5 X 12		4	
15	997 561 943 00	convertible top support	/L	1	
(15)	997 561 944 00	convertible top support	/R	1	
16	996 561 693 00	gaskets for roof strut POS.8		2	
17	996 561 735 02	guide		2	
18	999 075 065 09	hexagon-head bolt M8x35 mount convertible top support		6	

Pos	Part Number	Description	Remark	Qty	Model
19	996 561 715 00	support		2	
20	999 084 629 01	hexagon nut		2	
21	996 561 259 00	gasket	/L	1	
(21)	996 561 260 00	gasket	/R	1	
22	928 101 921 00	loctite		1	
23	996 561 055 01	bracket for tension rope	/L	1	
(23)	996 561 056 01	bracket for tension rope	/R	1	
24	999 084 629 01	hexagon nut		4	
25	997 561 897 00	velcro strip	/L	1	
(25)	997 561 898 00	velcro strip	/R	1	
26	997 561 531 00	spring plate		2	
27	997 561 579 00	protective plate	/L	1	
(27)	997 561 580 00	protective plate	/R	1	
28	999 190 494 30	rivet A 4.8x12.0		2	
29	997 561 961 00	buffer set		1	
30	999 073 138 01	screw M8x25		1	

Pos	Part Number	Description	Remark	Qty	Model

Model	Year	MG	SG	Illustration	Restrictions	UPD	20:29	06.02.2010	PORSCHE	PET	PORSCHE
997T2	2010	8	11	811-15		248	USA / CANADA				

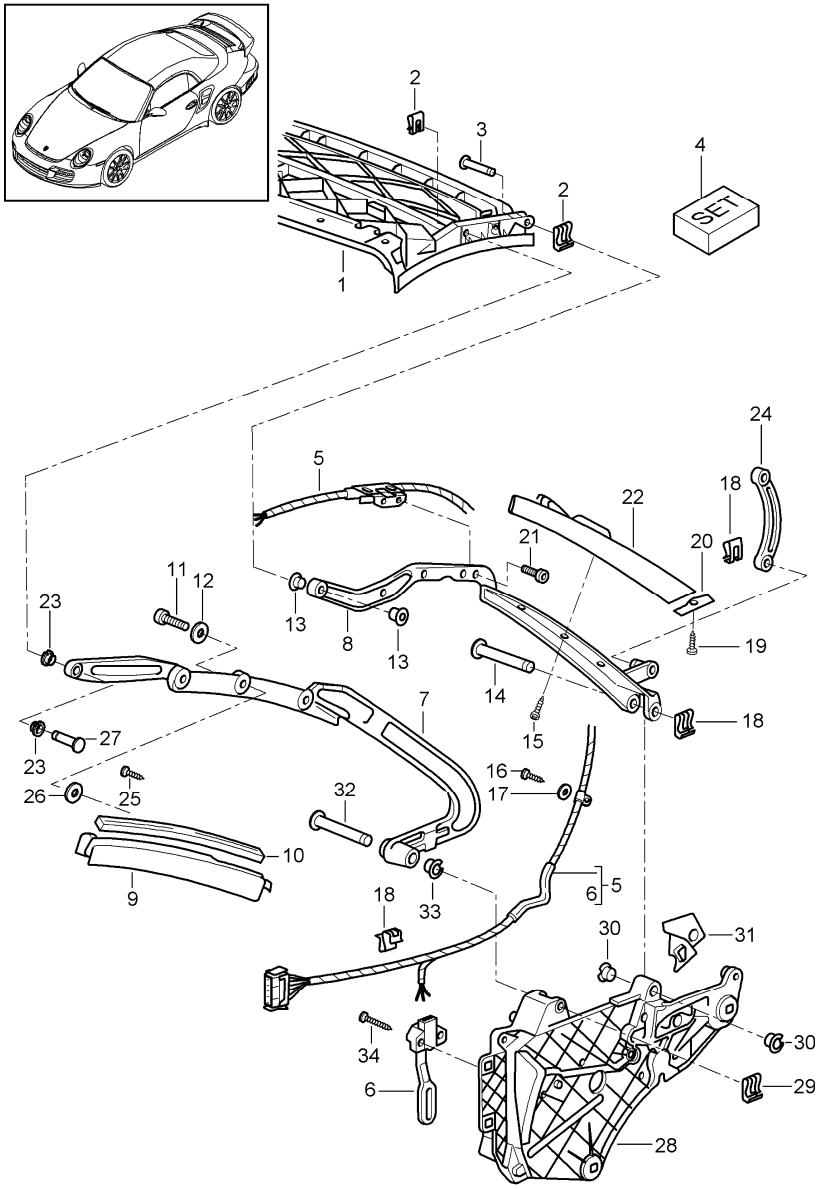

Pos	Part Number	Description	Remark	Qty	Model
		convertible top frame single parts			Cabrio
1	997 561 905 00	roof frame		1	
	A09	black			
		use also:			
-	997 561 509 00	felt strip 60 x 25 see tpi group 8 Nr. 53		1	
2	999 166 075 09	safety clip		X	
3	999 088 050 30	bolt 8X27,8		2	
4	997 561 909 00	repair kit bush bolt lock for roof frame		1	
5	997 612 698 01	wiring harness only for convertible top black		1	
5	997 612 698 03	wiring harness for convertible top coloured		1	
-	997 561 965 00	boot for wiring harness		1	
6	996 613 313 02	potentiometer		1	
7	996 561 335 00	roof frame	/L	1	
(7)	996 561 336 00	roof frame	/R	1	
8	997 561 939 00	roof frame	/L	1	
(8)	997 561 940 00	roof frame	/R	1	
9	997 561 355 01	sealing frame	/L	1	
	A09	black			
(9)	997 561 356 01	sealing frame	/R	1	

Pos	Part Number	Description	Remark	Qty	Model
	A09	black			
10	996 561 219 00	gasket for sealing frame		2	
11	999 073 195 09	round head screw M 6X20		10	
12	900 151 006 09	washer		X	
13	999 924 086 40	bearing sleeve		16	
14	999 088 031 30	bolt		1	
15	999 919 153 09	oval-head screw		X	
16	900 144 101 02	tapping screw		X	
17	900 151 027 02	washer		8	
18	999 166 076 02	safety clip		4	
19	999 190 495 30	blind rivet		2	
20	997 561 239 00	gasket	/L	1	
(20)	997 561 240 00	gasket	/R	1	
21	N 014 128 13	oval-head screw M5X8		4	
22	997 561 319 03	sealing frame	/L	1	
	A09	black			
(22)	997 561 320 03	sealing frame	/R	1	
	A09	black			
23	999 924 086 40	bearing sleeve		8	
24	996 561 051 01	lever	/L	1	
(24)	996 561 052 01	lever	/R	1	
25	999 919 141 09	oval-head screw		8	
26	999 025 267 09	washer		4	
27	999 088 049 30	bolt 8x32,8		2	
28	997 561 943 00	convertible top support	/L	1	
(28)	997 561 944 00	convertible top support	/R	1	

Pos	Part Number	Description	Remark	Qty	Model
29	999 166 076 02	safety clip		6	
30	999 924 125 40	bush		2	
31	996 561 249 01	sealing strip	/L	1	
(31)	996 561 250 01	sealing strip	/R	1	
32	999 088 031 30	bolt		4	
33	999 924 125 40	bush		4	
34	999 919 152 09	oval-head screw 3,5X8		2	

Model	Year	MG	SG	Illustration	Restrictions	UPD	20:29	06.02.2010
997T2	2010	8	11	811-20		248	USA / CANADA	

PORSCHE PET PORSCHE

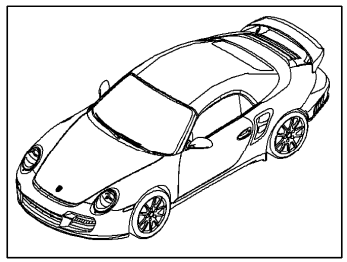

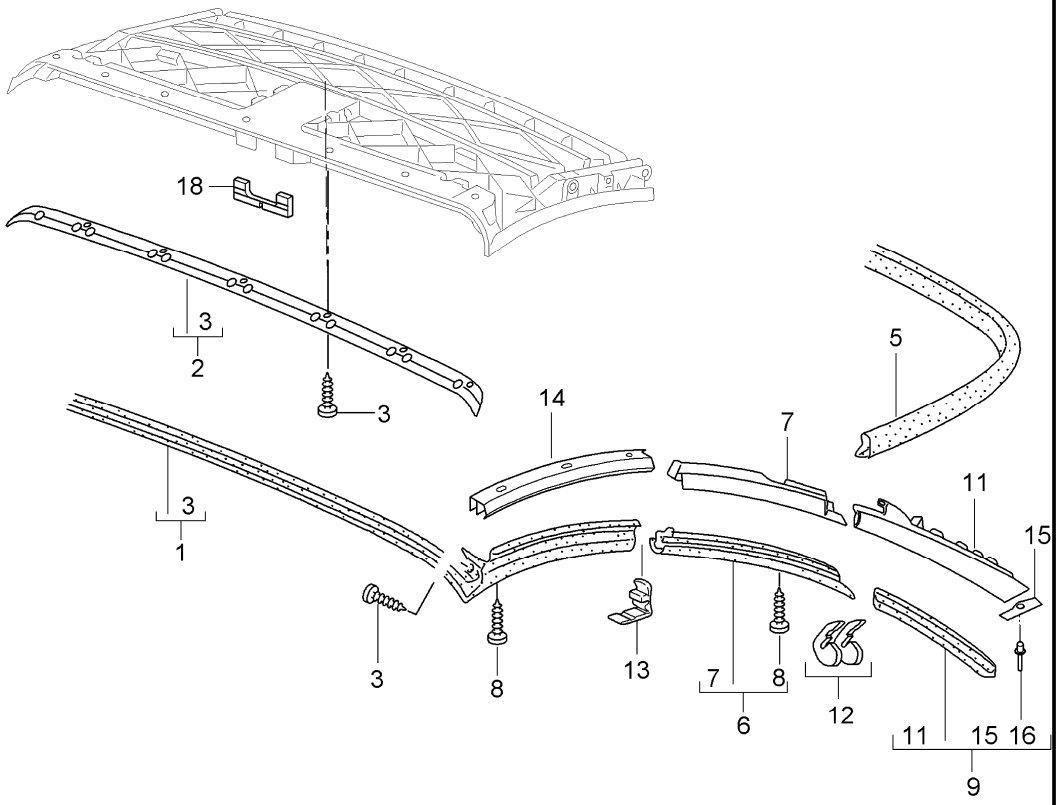

Pos	Part Number	Description	Remark	Qty	Model
		convertible top seal			Cabrio
1	997 561 937 00	roof frame seal set		1	
2	997 561 951 00	retaining strip set		1	
3	999 141 036 09	oval-head screw		7	
5	997 561 949 00	gasket roof strut		1	
6	997 561 913 02	gaskets assembly kit	/L	1	
(6)	997 561 914 02	gaskets assembly kit	/R	1	
7	997 561 355 01	frame	/L	1	
	A09	black			
(7)	997 561 356 01	frame	/R	1	
	A09	black			
8	999 919 152 09	oval-head screw		X	
9	997 561 923 03	gasket assembly kit	/L	1	
(9)	997 561 924 03	gasket assembly kit	/R	1	
11	997 561 319 03	frame	/L	1	
	A09	black			
(11)	997 561 320 03	frame	/R	1	
	A09	black			
12	996 561 935 00	filler piece set		2	
13	997 561 813 00	filler piece roof frame front	/L	1	
(13)	997 561 814 00	filler piece roof frame front	/R	1	
14	996 561 527 00	mounting	/L	1	

Pos	Part Number	Description	Remark	Qty	Model
(14)	996 561 528 00	mounting	/R	1	
15	997 561 239 00	gasket	/L	1	
(15)	997 561 240 00	gasket	/R	1	
16	999 190 495 30	blind rivet		4	
18	996 561 745 00	buffer		1	

Pos	Part Number	Description	Remark	Qty	Model

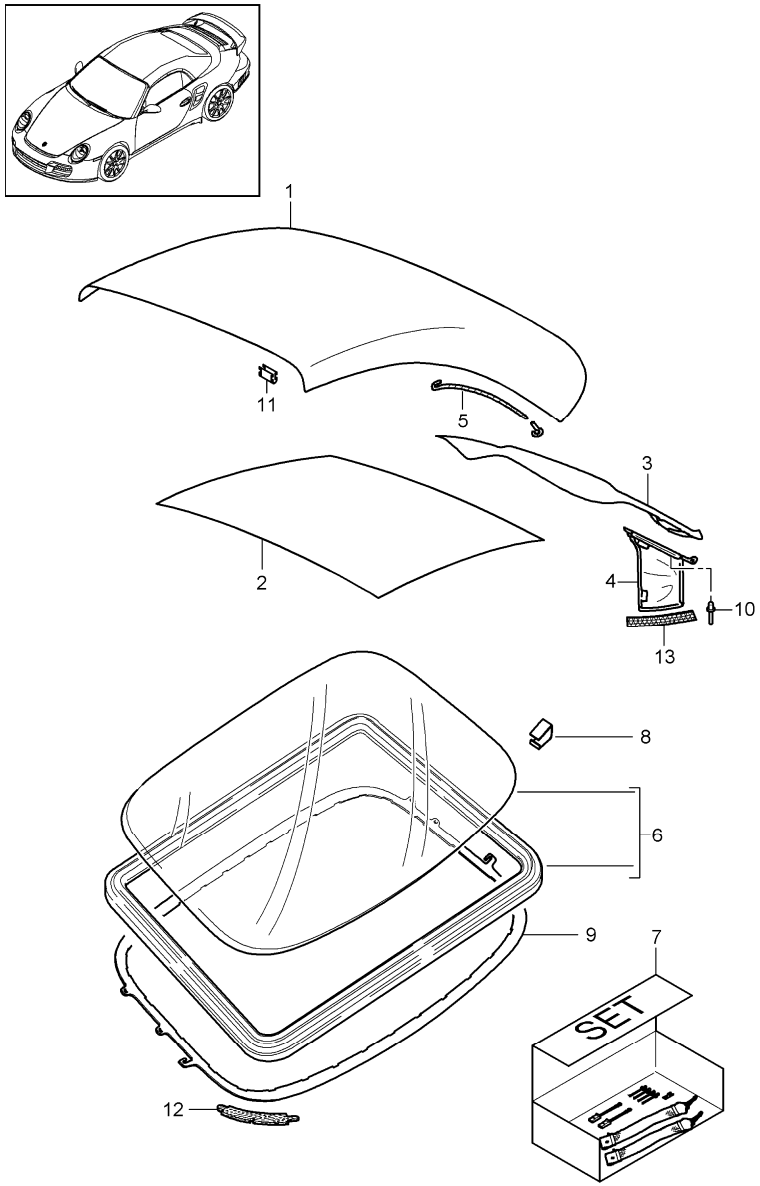

Pos	Part Number	Description	Remark	Qty	Model
		convertible top covering roofliner			Cabrio
1	997 561 901 03	convertible top covering without rear window		1	
	A10	black			
	C17	stone grey			
	G02	metropole blue			
	R17	brown			
2	997 561 085 02	roofliner		1	
	A21	black			
3		restraining strap see illustrations 08/11/06		2	
4	997 561 095 02	bag	/L	1	
	A21	black			
(4)	997 561 096 02	bag	/R	1	
	A21	black			
5	996 561 931 01	tension rope repair kit		2	
6	997 561 979 00	rear window with gasket		1	
7	997 561 929 00	set of fastening parts frame rear window		1	
8	996 561 205 00	clamp		32	
9	996 561 203 00	frame order also: 997.561.929.00		1	
-	997 561 929 00	set of fastening parts		1	
10	999 190 446 30	blind rivet		4	
11	997 561 915 00	set clamp for roofliner pieces		1 20	

Pos	Part Number	Description	Remark	Qty	Model
12	997 561 721 00	velcro strip frame rear window		2	
13	997 561 897 00	velcro strip mount bag	/L	1	
(13)	997 561 898 00	velcro strip mount bag	/R	1	

Pos	Part Number	Description	Remark	Qty	Model

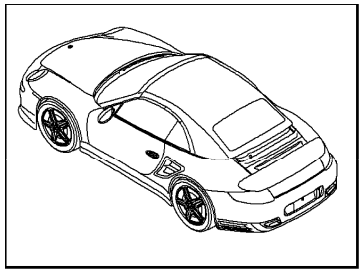

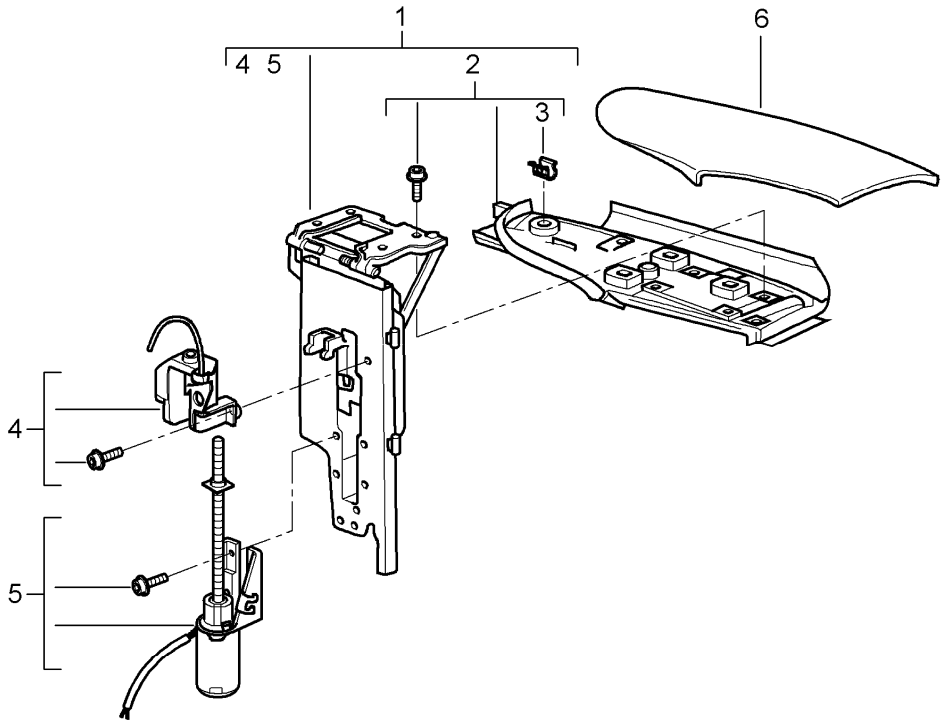

Pos		Part Number	Description	Remark	Qty	Model
			flap lateral folding top			Cabrio
1		996 561 175 01	flap	/L	1	
(1)		996 561 176 01	flap	/R	1	
2		996 561 625 00	lower part	/L	1	
(2)		996 561 626 00	lower part	/R	1	
3		999 507 533 02	clamp		X	
4		996 561 685 00	microswitch	/L	1	
(4)		996 561 686 00	microswitch	/R	1	
5		996 561 675 00	driving mechanism	/L	1	
(5)		996 561 676 00	driving mechanism	/R	1	
6	P		see illustrations 8/07/07		1	

Model	Year	MG	SG	Illustration	Restrictions	UPD	20:30	06.02.2010	PORSCHE	PET	PORSCHE
997T2	2010	8	11	811-35		248	USA / CANADA				

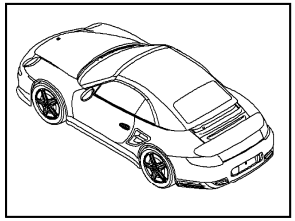

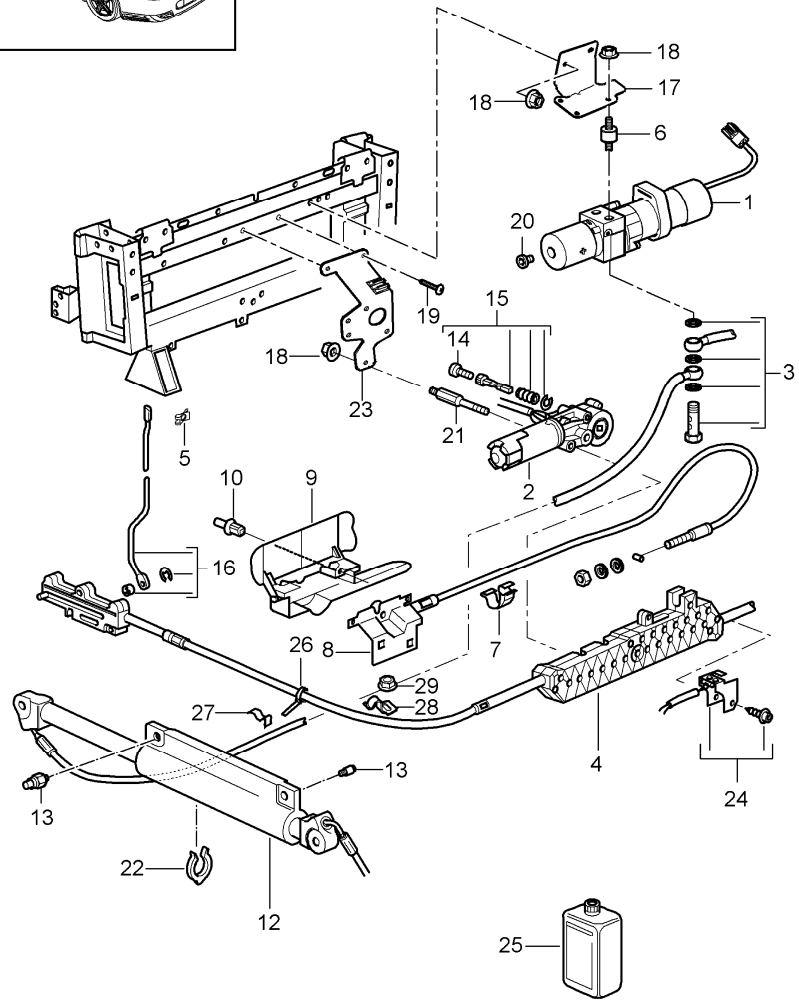

Pos	Part Number	Description	Remark	Qty	Model
		convertible top driving mechanism hydraulic			Cabrio
1	997 561 307 00	pump		1	
2	996 561 933 01	driving mechanism		1	
3	996 561 573 00	banjo bolt		2	
4	997 561 021 00	driving mechanism		1	
5	999 166 054 01	sl-lock		2	
6	999 703 235 01	bonded rubber buffer		2	
7	999 507 683 40	cable holder		X	
8	996 561 065 01	locking device		1	
9	996 561 265 03	lining		1	
10	999 591 941 40	expansion rivet		X	
12	997 561 945 01	cylinder		2	
13	996 561 245 00	bolt set		1	
14	996 561 671 00	screw emergency operation		1	
15	996 561 673 01	repair kit		1	
16	996 561 229 00	push rod	/L	1	
(16)	996 561 230 00	push rod	/R	1	
17	997 561 217 00	bracket hydraulic unit		1	
18	900 377 010 01	hexagon nut M 6		7	
19	999 073 228 09	tapping screw St 4,8		6	
20	996 561 407 01	oil filler screw		1	
21	996 561 863 01	stud		3	
22	996 561 281 00	retainer		2	
23	996 561 207 01	support driving mechanism convertible top compartm.		1	

Pos	Part Number	Description	Remark	Qty	Model
24	996 561 165 01	microswitch		1	
25	000 043 204 89	oil 250 ML		X	
26	999 513 077 40	tie-wrap		2	
27	997 561 773 00	clamp hydraulic line		2	
28	997 561 775 00	support bowden cable		2	
29	900 380 015 01	hexagon nut M6		2	

Pos	Part Number	Description	Remark	Qty	Model

Model	Year	MG	SG	Illustration	Restrictions	UPD	20:30	06.02.2010	PORSCHE	PET	PORSCHE
997T2	2010	8	11	811-40		248	USA / CANADA				

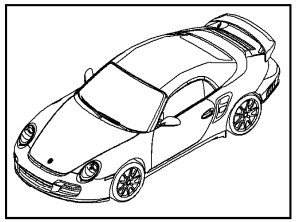

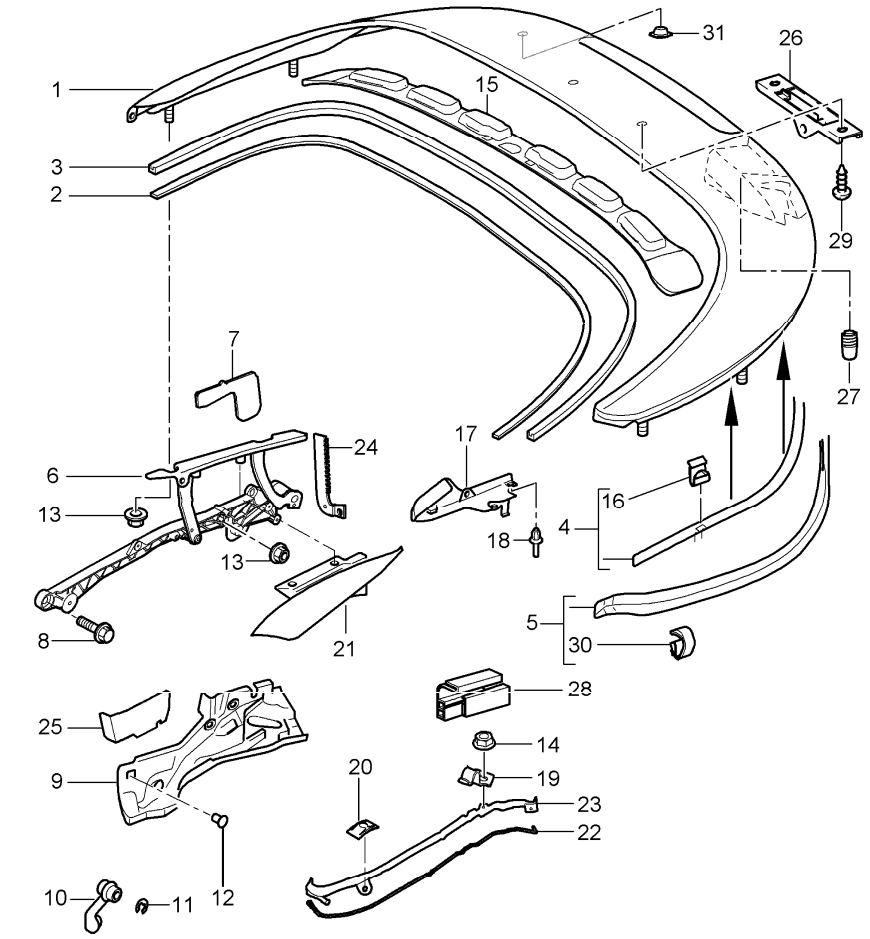

Pos	Part Number	Description	Remark	Qty	Model
		convertible top compartm. lid gaskets			Cabrio
1	997 514 011 05	lid		1	-I686
	GRV	prime coated			
(1)	997 514 011 03	lid		1	I686
	GRV	prime coated			
2	997 514 633 01	sealing strip use also:		1	
-	000 043 207 26	adhesive tape 3 Meter 8mm breit		1	
3	996 514 731 00	gasket		1	
4	997 514 714 02	edge protection		1	
5	997 514 211 01	gasket body		1	
6	997 561 928 00	hinge right use also: gasket 996.561.904.00	/R	1 1	
(6)	997 561 927 00	hinge left use also: gasket 996.561.904.00	/L	1 1	
7	996 561 904 00	gasket hinge		1	
8	900 378 180 01	hexagon-head bolt		2	
9	997 561 806 00	water drip pan right	/R	1	
(9)	997 561 805 00	water drip pan left	/L	1	
10	996 561 816 01	water drain hose right	/R	1	
(10)	996 561 815 01	water drain hose left	/L	1	

Pos	Part Number	Description	Remark	Qty	Model
11	996 561 809 00	clamp for Pos. 10		1	
12	999 703 432 40	stopper		1	
13	900 377 003 03	hexagon nut M 8		X	
14	900 380 015 01	hexagon nut M6		1	
15	997 561 633 01	buffer foam part		1	
16	999 507 600 09	u-clamp		4	
17	997 514 651 02	mounting	/L	1	
(17)	997 514 652 02	mounting	/R	1	
18	999 591 712 40	expansion rivet		2	
19	997 561 775 00	support		1	
20	999 507 647 01	clamping washer front for water drain strip		1	
21	996 561 062 02	flap right	/R	1	
(21)	996 561 061 02	flap left	/L	1	
22	999 911 673 41	sealing cord		1	
23	997 561 756 02	water drain strip right	/R	1	
(23)	997 561 755 02	water drain strip left	/L	1	
24	996 612 504 00	cable guide wiring harness brake light	/L	1	
(24)	997 610 241 00	cable guide wiring harness antenna	/R	1	I686
25	997 561 522 01	cover right	/R	1	
(25)	997 561 521 01	cover left	/L	1	
26	996 561 465 00	clip		1	
27	999 703 140 40	rubber buffer		2	
28	997 561 801 00	stop -2MM		2	
28	997 561 801 01	stop -1MM		2	
28	997 561 801 02	stop +-0		2	
28	997 561 801 03	stop +1MM		2	
28	997 561 801 04	stop +2MM		2	
28	997 561 801 05	stop +3MM		2	
29	999 073 130 02	oval-head screw		2	
30	996 514 511 00	clip		2	
31	999 703 462 40	stopper 10x6,5	Turbo	2	
--	999 703 117 40	stopper		1	

Model	Year	MG	SG	Illustration	Restrictions	UPD	20:30	06.02.2010	PORSCHE PET PORSCHE
997T2	2010	8	11	811-45		248	USA / CANADA		

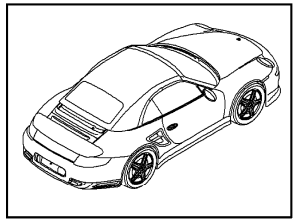

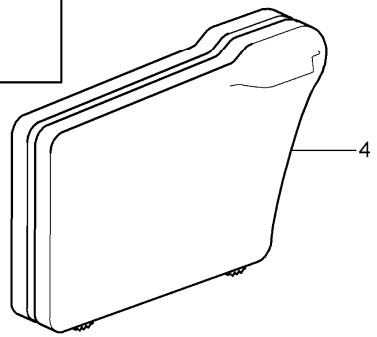

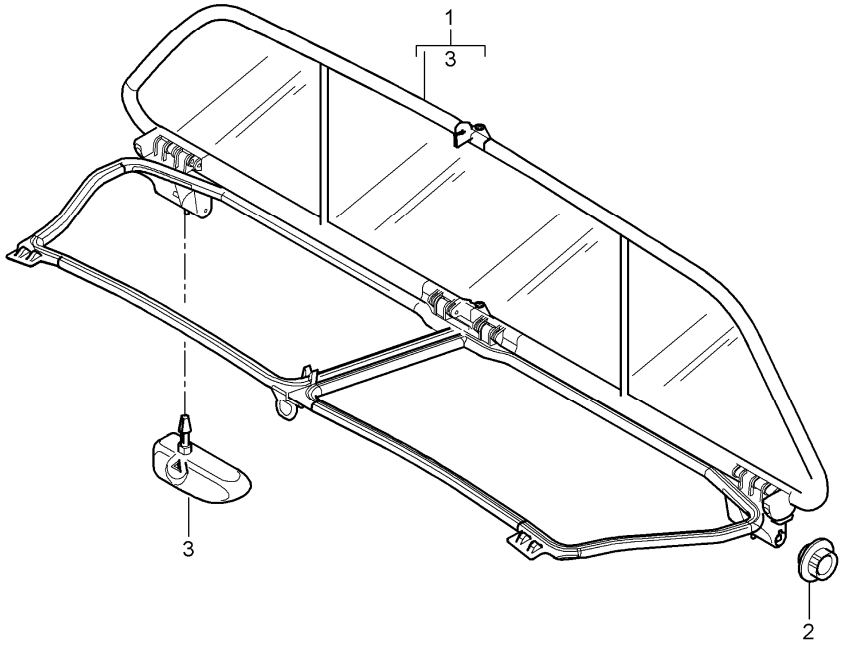

Pos	Part Number	Description	Remark	Qty	Model
		wind deflector			I551
1	997 561 125 01	wind deflector		1	
	01C	black			
2	996 561 127 00	rosette	/L	1	
	01C	black			
2	996 561 128 00	rosette	/R	1	
	01C	black			
3	997 561 955 00	repair kit locking device	/L	1	
(3)	997 561 956 00	repair kit locking device	/R	1	
4	997 561 161 02	bag wind deflector		1	

Model	Year	MG	SG	Illustration	Restrictions	UPD	20:30	06.02.2010	PORSCHE	PET	PORSCHE
997T2	2010	8	11	811-50		248	USA / CANADA				

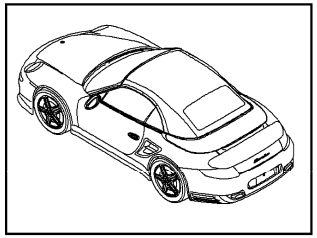

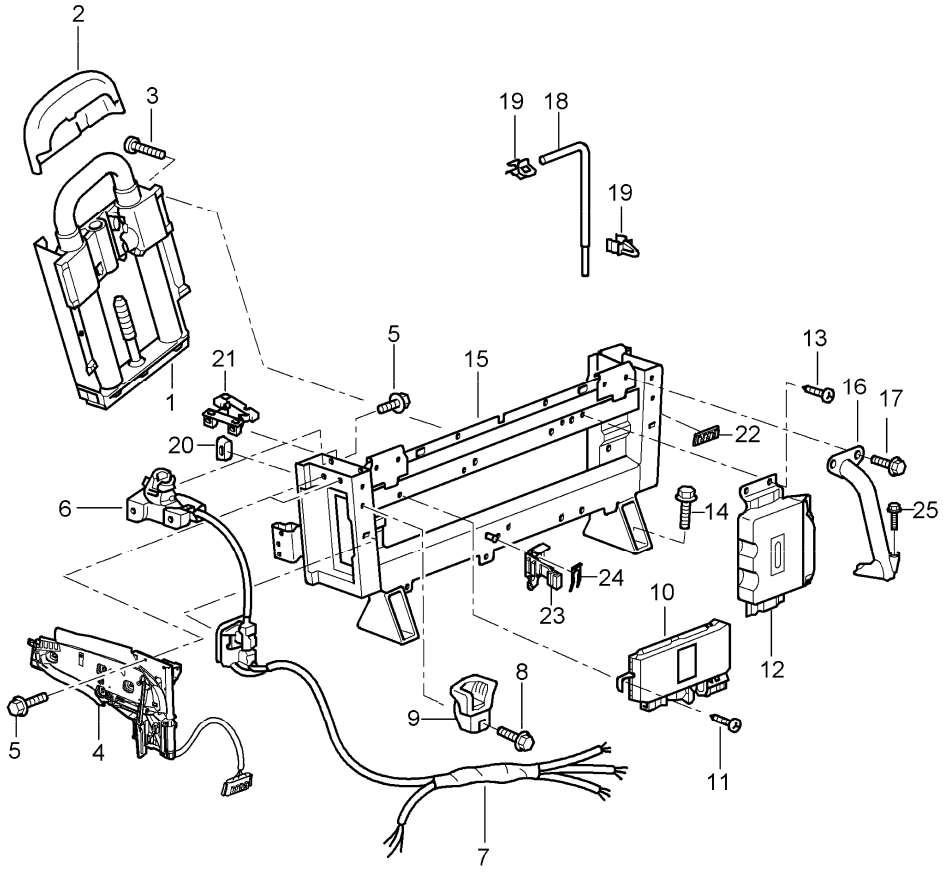

Pos	Part Number	Description	Remark	Qty	Model
		roll-over bar			Cabrio
1	997 580 021 04	cassette		2	
2	996 580 191 01	cover		2	
3	900 067 394 01	pan-head screw		12	
4	996 561 175 01	flap see illustrations 8/11/30	/L	1	
(4)	996 561 176 01	flap see illustrations 8/11/30	/R	1	
5	900 378 173 01	hexagon-head bolt		6	
6		mounting see illustrations 08/11/55		2	I550
6	996 561 653 04	mounting	/L	1	I550
(6)	996 561 654 04	mounting	/R	1	I550
7	997 612 696 00	wiring harness		1	
8	900 378 173 01	hexagon-head bolt M6 X 20		4	
9	996 561 463 02	guide	/L	1	
(9)	996 561 464 02	guide	/R	1	
10	997 618 111 03	control unit		1	
11	999 073 228 09	tapping screw		X	
12		control unit - dme - see group 9/01/03		X	
13	999 073 228 09	tapping screw		X	
14	999 385 006 01	screw		4	
15	997 580 911 00	auxiliary support use also:		1	
--	997 580 913 00	set of fastening parts blind rivet screw		1	
16	997 580 331 02	bracket	/L	1	

Pos	Part Number	Description	Remark	Qty	Model
(16)	997 580 332 02	bracket	/R	1	
17	900 385 097 01	torx screw BM10 X 35		4	
18	999 571 079 03	screwdriver emergency operation		1	
19	999 507 633 40	clamp		2	
20	997 561 457 00	sleeve		2	
21	996 561 297 00	insert	/L	1	-I550
(21)	996 561 298 00	insert	/R	1	-I550
22	999 650 176 40	clip for connector housing		3	
23	996 610 126 00	support relay carrier 2		1	
24	996 610 128 00	fixing clip relay carrier 2		1	
25	999 217 166 01	hexagon-head bolt M10x55		2	

Pos	Part Number	Description	Remark	Qty	Model

Model	Year	MG	SG	Illustration	Restrictions	UPD	20:31	06.02.2010	PORSCHE	PET	PORSCHE
997T2	2010	8	11	811-55		248	USA / CANADA				

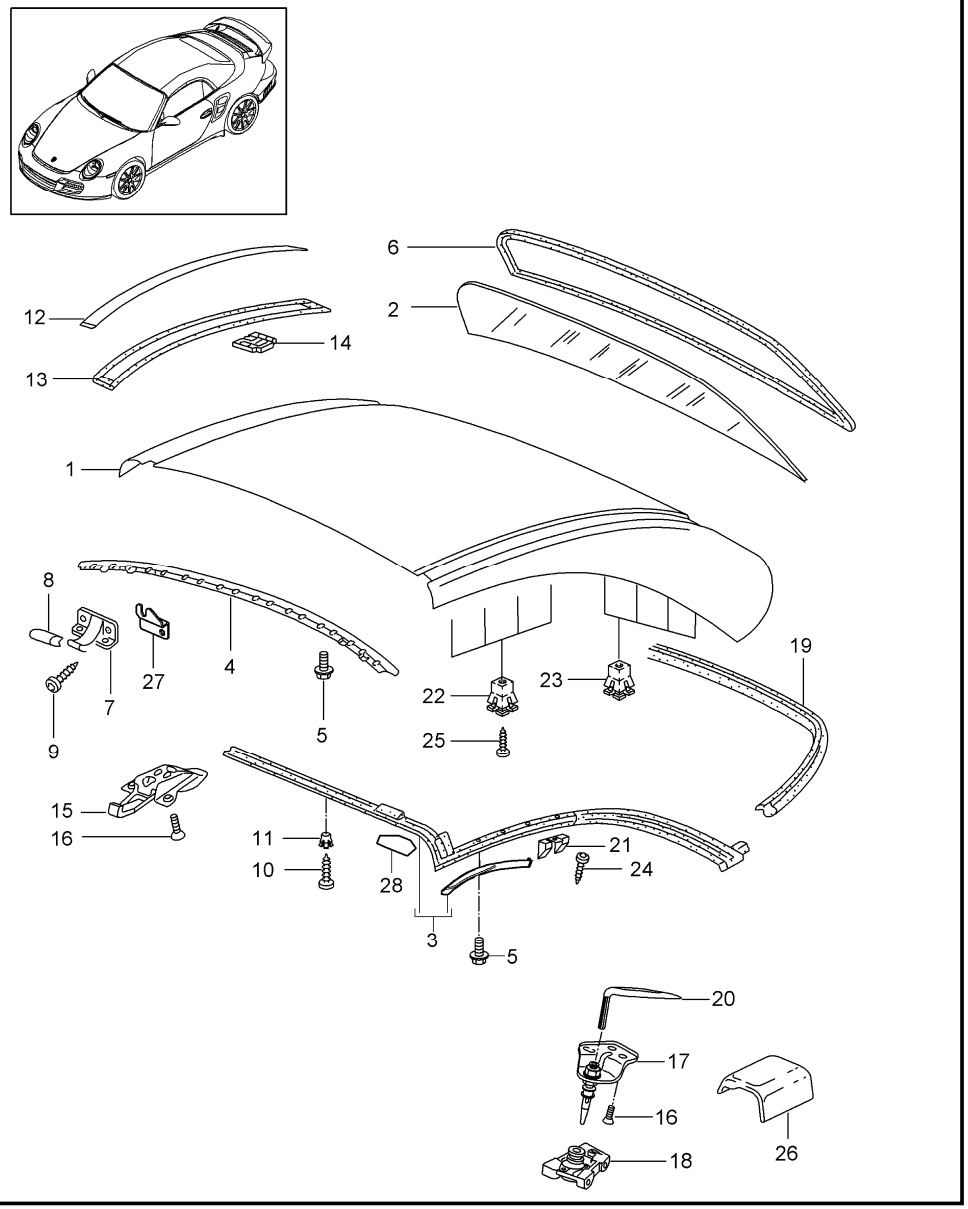

Pos	Part Number	Description	Remark	Qty	Model
		hardtop accessories gaskets			I550
1	996 563 911 00	hardtop without accessories		1	
	GRV	prime coated			
2	996 563 091 00	rear window ready for installation		1	
3	997 563 225 00	gasket with retaining strip rear when required order also:		1	
--	996 563 309 00	retaining strip front	/L	1	
--	996 563 310 00	retaining strip front	/R	1	
4	996 563 319 00	retaining strip		1	
5	999 073 049 02	fastening screw for retaining strip front transverse		8	
6	996 563 029 00	gasket		1	
7	996 563 405 00	centring journal	/L	1	
(7)	996 563 406 00	centring journal	/R	1	
8	996 563 705 01	cap	/L	1	
(8)	996 563 706 01	cap	/R	1	
9	999 919 144 09	oval-head screw		4	
10	999 073 049 02	tapping screw		14	
11	999 507 547 40	expander nut		8	
12	996 563 707 00	cover strip	/L	1	
	GRV	prime coated			
(12)	996 563 708 00	cover strip	/R	1	
	GRV	prime coated			

Pos	Part Number	Description	Remark	Qty	Model
13	996 563 361 00	gasket	/L	1	
(13)	996 563 362 00	gasket	/R	1	
14	986 563 721 00	clip		8	
15	996 563 401 00	catch		1	
16	900 249 055 09	hexagon-head bolt M 6X20		3	
17	996 563 403 04	catch	/L	1	
(17)	996 563 404 04	catch	/R	1	
18	997 561 653 00	mounting	/L	1	
--	996 561 657 02	insert		1	
--	900 249 031 09	countersunk-head screw		6	
(18)	997 561 654 00	mounting	/R	1	
--	996 561 658 02	insert		1	
19	996 563 027 01	gasket		1	
20	996 563 413 01	tool		1	
21	996 563 125 00	thrust wedge		2	
22	999 507 923 40	expander nut green		8	
23	999 507 924 40	expander nut yellow		8	
24	999 450 008 09	tapping screw		2	
25	999 073 049 02	tapping screw		16	
26	996 563 421 01	protective tab		2	
--	999 507 659 40	expander nut hardtop support for contact	/L	1	
--	999 507 662 40	expander nut hardtop support for contact	/R	1	
27	996 563 509 00	support for lining see group 8/11/60 POS. 5	/L	1	
(27)	996 563 510 00	support for lining see group 8/11/60 POS. 5	/R	1	
28	997 563 539 00	protective film cowl	/L	1	
(28)	997 563 540 00	protective film cowl	/R	1	

Model	Year	MG	SG	Illustration	Restrictions	UPD	20:31	06.02.2010
997T2	2010	8	11	811-60		248	USA / CANADA	

PORSCHE PET PORSCHE

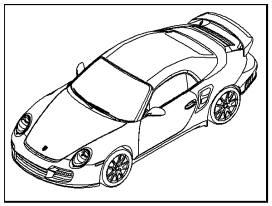

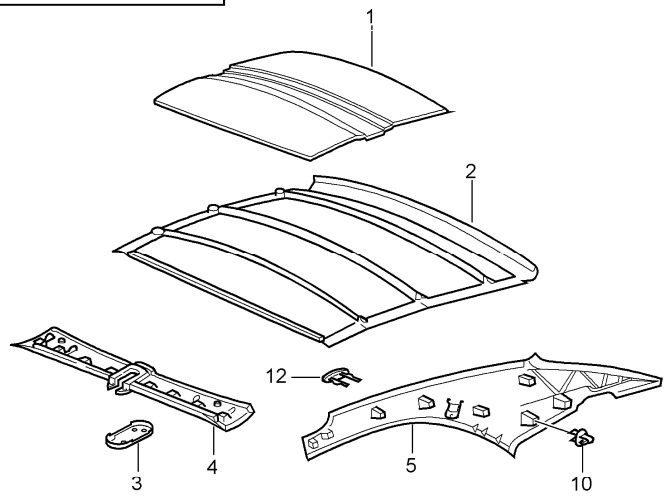

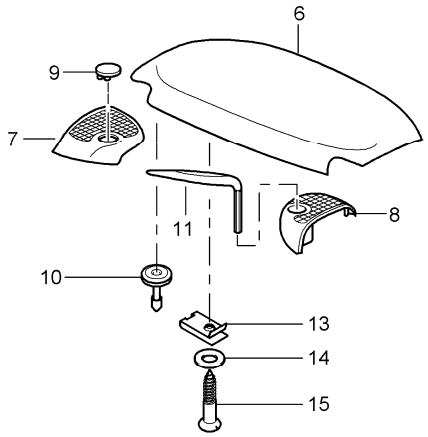

Pos	Part Number	Description	Remark	Qty	Model
		hardtop sound absorber			I550
1	996 563 523 00	sound absorber		1	
2	996 563 111 01	roofliner		1	
	A21	black			
3	997 563 551 00	trim cover		1	
	01C	black			
4	997 563 501 00	lining leatherette		1	
	1MZ	black			
	1TK	sand beige			
	1VM	sea blue			
	1YP	stone grey			
5	997 563 503 00	lining leatherette	/L	1	
	1MZ	black			
	1TK	sand beige			
	1VM	sea blue			
	1YP	stone grey			
(5)	997 563 504 00	lining leatherette	/R	1	
	1MZ	black			
	1TK	sand beige			
	1VM	sea blue			
	1YP	stone grey			
6	996 563 505 00	lining		1	
	A07	black			
	C19	stone grey			
	R18	brown			
	G03	metropole blue			
7	996 563 554 00	lid	/R	1	

Pos	Part Number	Description	Remark	Qty	Model
	A10	black			
	5V7	stone grey			
	8P9	cocoa			
	G10	metropole blue			
8	996 563 553 00	lid	/L	1	
	A10	black			
	5V7	stone grey			
	8P9	cocoa			
	G10	metropole blue			
9	996 555 457 00	lid		2	
	A10	black			
	5V7	stone grey			
	8P9	cocoa			
	G10	metropole blue			
10	999 507 764 40	clip		X	
11	996 563 413 01	tool		1	
12	996 563 561 00	rubber stop for sun visors		2	
	01C	black			
13	999 507 139 01	speed nut		X	
14	900 151 027 02	washer		2	
15	900 143 046 02	tapping screw		2	

Model	Year	MG	SG	Illustration	Restrictions	UPD	20:31	06.02.2010
997T2	2010	8	12	812-00		248	USA / CANADA	

PORSCHE PET PORSCHE

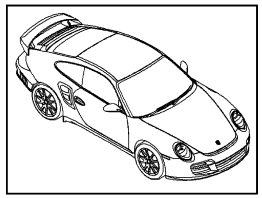

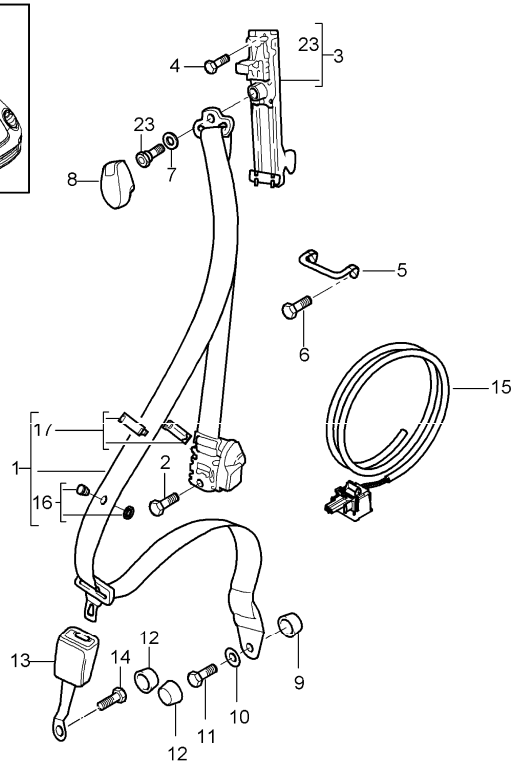

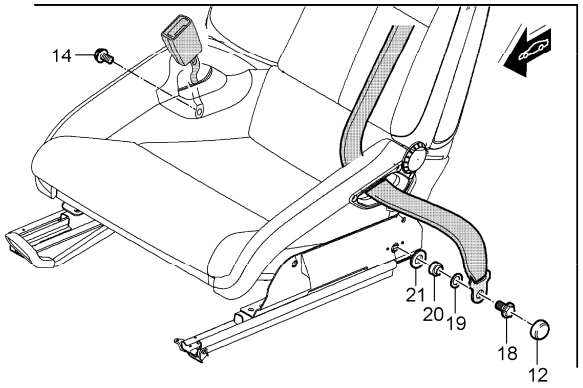

Pos	Part Number	Description	Remark	Qty	Model
		seat belt front			Coupe
1	997 803 033 05	seat belt	/L	1	
	A23	black			I555
	N13	guards red			IXSX
	U01	silver			IXSH
	V02	speed yellow			IXSY
(1)	997 803 034 13	seat belt	/R	1	I553
	A23	black			I555
	N13	guards red			IXSX
	U01	silver			IXSH
	V02	speed yellow			IXSY
2	999 075 070 09	hexagon-head bolt		2	
3	997 803 231 01	front vertical adjustment with fastening screw belt		2	
--	999 075 078 01	fastening screw		2	
4	900 067 131 02	screw		2	
5	996 803 825 01	relay lever		2	
6	900 378 036 09	hexagon-head bolt		4	
7	999 031 052 40	adjusting shim		2	
8	997 803 521 00	cover		2	
	A03	black			
9	999 924 064 02	bush		2	
10	211 857 771	washer		2	
11	999 075 079 01	hexagon-head bolt		2	
12	811 857 845	cap		X	
	01C	black			
(13)	997 803 183 09	seat-belt buckle driver's side		1	

Pos	Part Number	Description	Remark	Qty	Model
(13)	997 803 183 09	seat-belt buckle passenger's side		1	
(13)	997 803 183 10	seat-belt buckle passenger's side		1	I389/560
13	997 803 183 11	seat-belt buckle driver's side		1	I388
14	999 218 101 02	hexagon-head bolt		2	
14	999 218 101 02	hexagon-head bolt		2	I388/389
15		cable for seat-belt tensioner see group 9/02/10		X	
16	955 803 056 00	knob		2	
	HCP	black			
17	997 803 334 00	clamping piece		2	
	01C	black			
18	999 075 072 09	hexagon-head bolt		1	I388/389
19	999 028 022 01	spring washer		1	I388/389
20	997 803 663 00	spacer sleeve		1	I388/389
21	999 025 275 A2	washer		1	I388/389
23	999 075 078 01	fastening screw belt		1	

Pos	Part Number	Description	Remark	Qty	Model

Model	Year	MG	SG	Illustration	Restrictions	UPD	20:31	06.02.2010	PORSCHE PET PORSCHE
997T2	2010	8	12	812-05		248	USA / CANADA		

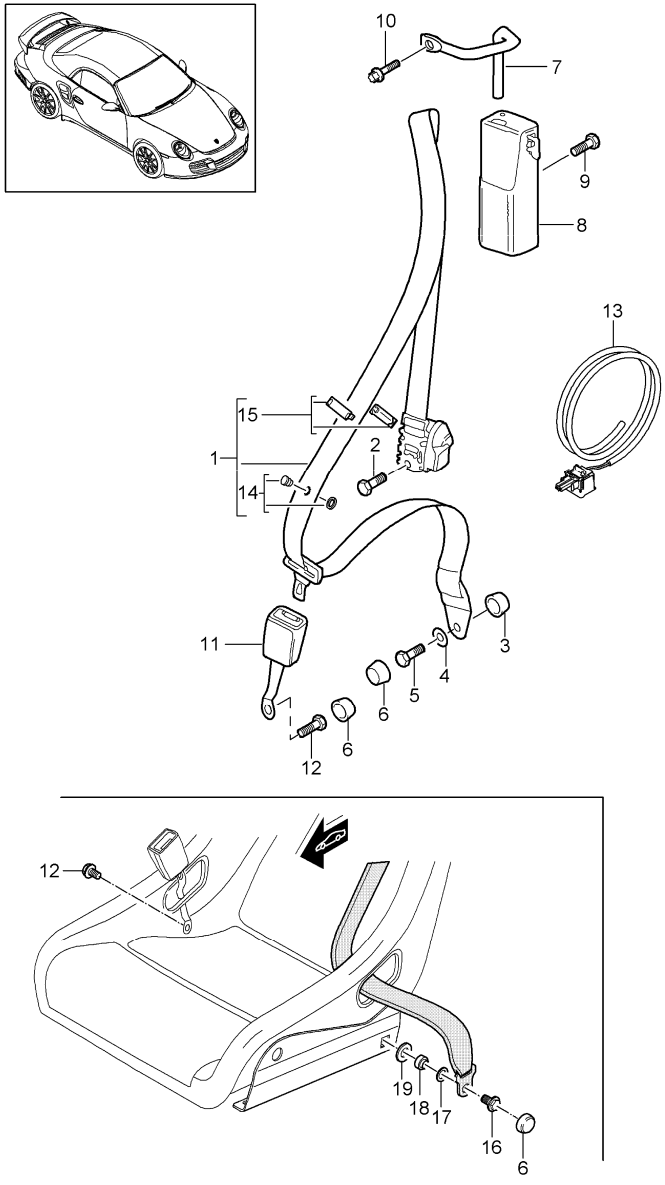

Pos	Part Number	Description	Remark	Qty	Model
		seat belt front			Cabrio
1	997 803 033 06	seat belt	/L	1	
	A23	black			I555
	N13	guards red			IXSX
	V02	speed yellow			IXSY
	U01	silver			IXSH
	6M4	sand beige			IXST
(1)	997 803 034 12	seat belt	/R	1	I553
	A23	black			I555
	N13	guards red			IXSX
	V02	speed yellow			IXSY
	U01	silver			IXSH
	6M4	sand beige			IXST
2	999 075 070 09	hexagon-head bolt		2	
3	999 924 064 02	spacer sleeve		2	
4	211 857 771	washer		2	
5	999 075 079 01	hexagon-head bolt		2	
6	811 857 845	cap		X	
	01C	black			
7	996 803 815 00	reverse lever	/L	1	
(7)	996 803 816 00	reverse lever	/R	1	
8	996 803 581 00	mounting	/L	1	
(8)	996 803 582 00	mounting	/R	1	
9	999 075 065 09	hexagon-head bolt M8x35		4	
10	900 378 017 01	fastening screw M8x20		2	
(11)	997 803 183 09	seat-belt buckle driver's side		1	

Pos	Part Number	Description	Remark	Qty	Model
(11)	997 803 183 09	seat-belt buckle passenger's side		1	
(11)	997 803 183 10	seat-belt buckle passenger's side		1	I389/560
11	997 803 183 11	seat-belt buckle driver's side		1	I388
12	999 218 101 02	fastening screw		2	
13		cable for seat-belt tensioner see group 9/02/10		X	
14	955 803 056 00	knob		2	
	HCP	black			
15	997 803 334 00	clamping piece		2	
	01C	black			
16	999 075 072 09	hexagon-head bolt		2	I388/389
17	999 028 022 01	spring washer		1	I388/389
18	997 803 663 00	spacer sleeve		1	I388/389
19	999 025 275 A2	washer		1	I388/389

Pos	Part Number	Description	Remark	Qty	Model

Model	Year	MG	SG	Illustration	Restrictions	UPD	20:31	06.02.2010	PET
997T2	2010	8	12	812-10		248	USA / CANADA		

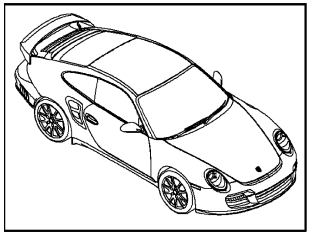

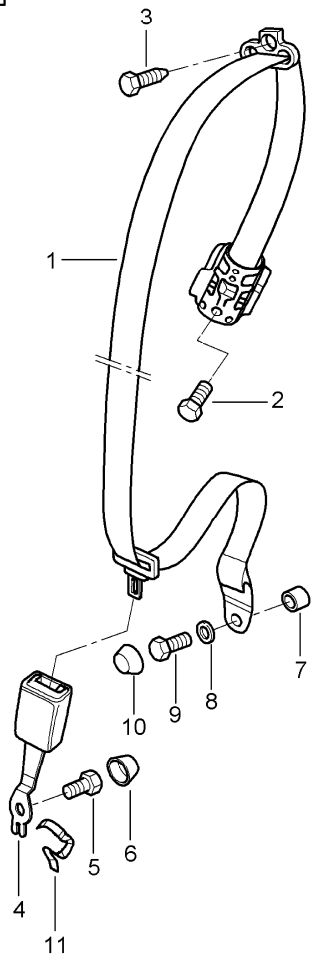

Pos	Part Number	Description	Remark	Qty	Model
		seat belt rear			Coupe
1	997 803 035 03	seat belt	/L	1	I553
	V02	speed yellow			IXSY
	N13	guards red			IXSX
	U01	silver			IXSH
	A23	black			I555
	6M4	sand beige			IXST
(1)	997 803 036 03	seat belt	/R	1	I553
	V02	speed yellow			IXSY
	N13	guards red			IXSX
	U01	silver			IXSH
	A23	black			I555
	6M4	sand beige			IXST
2	999 075 070 09	hexagon-head bolt		2	
3	999 075 057 09	fastening screw		2	
4	996 803 165 01	seat-belt buckle	/L	1	
(4)	996 803 166 01	seat-belt buckle	/R	1	
5	999 075 070 09	fastening screw		2	
6	811 857 845	cap		2	
	01C	black			
7	999 924 064 01	bush		2	
8	211 857 771	washer		2	
9	999 075 079 01	hexagon-head bolt		2	
10	811 857 845	cap		2	I193
	01C	black			
11	996 551 745 00	fastening clamp	/L	2	
(11)	996 551 746 00	fastening clamp	/R	2	

Model	Year	MG	SG	Illustration	Restrictions	UPD	20:32	06.02.2010	PET
997T2	2010	8	12	812-15		248	USA / CANADA		

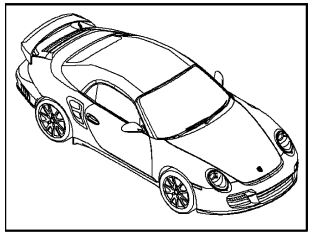

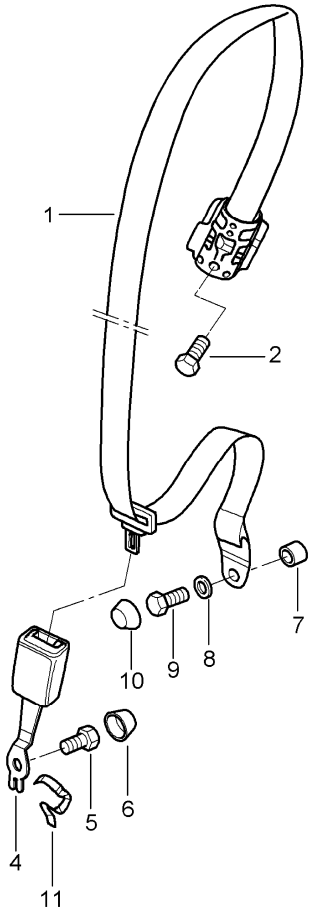

Pos	Part Number	Description	Remark	Qty	Model
		seat belt rear			Cabrio
(1)	997 803 035 01	seat belt	/L	1	I553
	V02	speed yellow			IXSY
	N13	guards red			IXSX
	U01	silver			IXSH
	A23	black			I555
	6M4	sand beige			IXST
(1)	997 803 036 01	seat belt	/R	1	I553
	V02	speed yellow			IXSY
	N13	guards red			IXSX
	U01	silver			IXSH
	A23	black			I555
	6M4	sand beige			IXST
2	999 075 070 09	fastening screw		2	
4	996 803 165 01	seat-belt buckle	/L	1	
(4)	996 803 166 01	seat-belt buckle	/R	1	
5	999 075 070 09	fastening screw		2	
6	811 857 845	cap		2	
	01C	black			
7	999 924 064 01	spacer sleeve		2	
8	211 857 771	washer		2	
9	999 075 079 01	hexagon-head bolt		2	
10	811 857 845	cap		2	
	01C	black			
11	996 551 745 00	clamp		2	

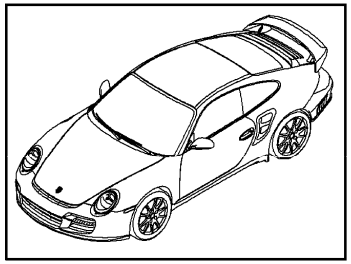

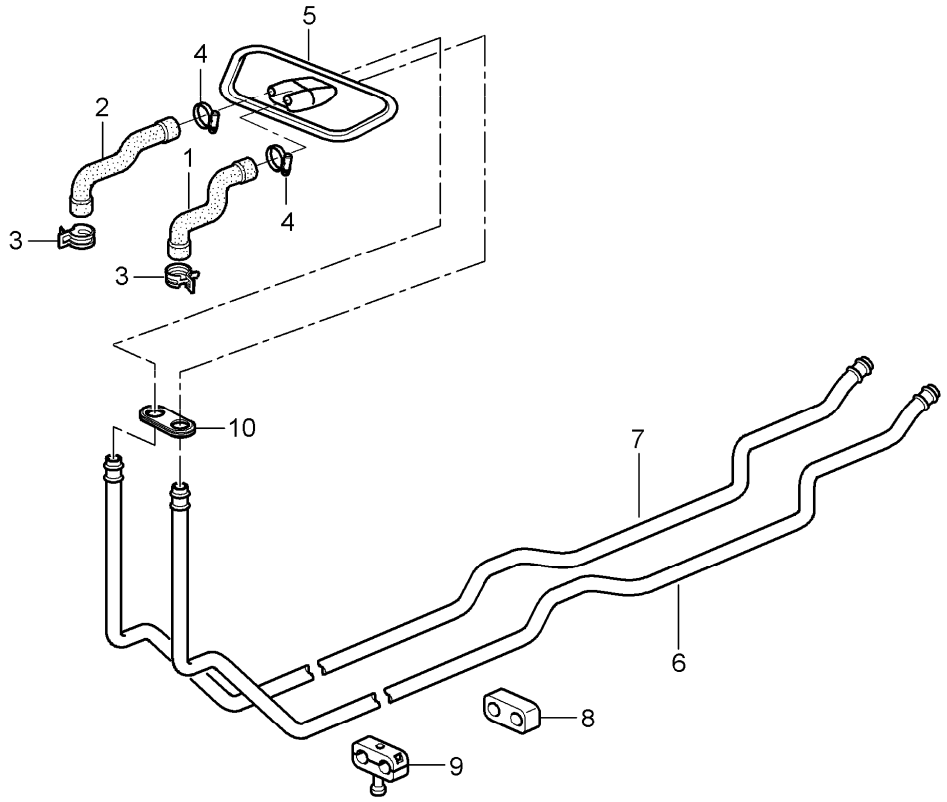

Pos	Part Number	Description	Remark	Qty	Model
		heating system 1 feed line return line			
1	997 572 553 00	heater hose intake	/LL	1	I098
2	997 572 555 00	heater hose return line	/LL	1	I098
3	999 512 656 09	hose clamp B25 X 12		2	
4	999 512 346 01	hose clamp A16-27/9		2	
5	996 572 263 02	gasket	/LL	1	I098
6	997 572 681 00	heater pipeline supply		1	
7	997 572 683 00	heater pipeline return line		1	
8	996 572 785 00	connection piece		X	
9	999 511 230 40	cable holder		4	
--	999 511 232 41	rubber mounting 19/19		4	
10	996 572 765 02	grommet		1	

Model	Year	MG	SG	Illustration	Restrictions	UPD	20:32	06.02.2010
997T2	2010	8	13	813-01		248	USA / CANADA	

PORSCHE PET PORSCHE

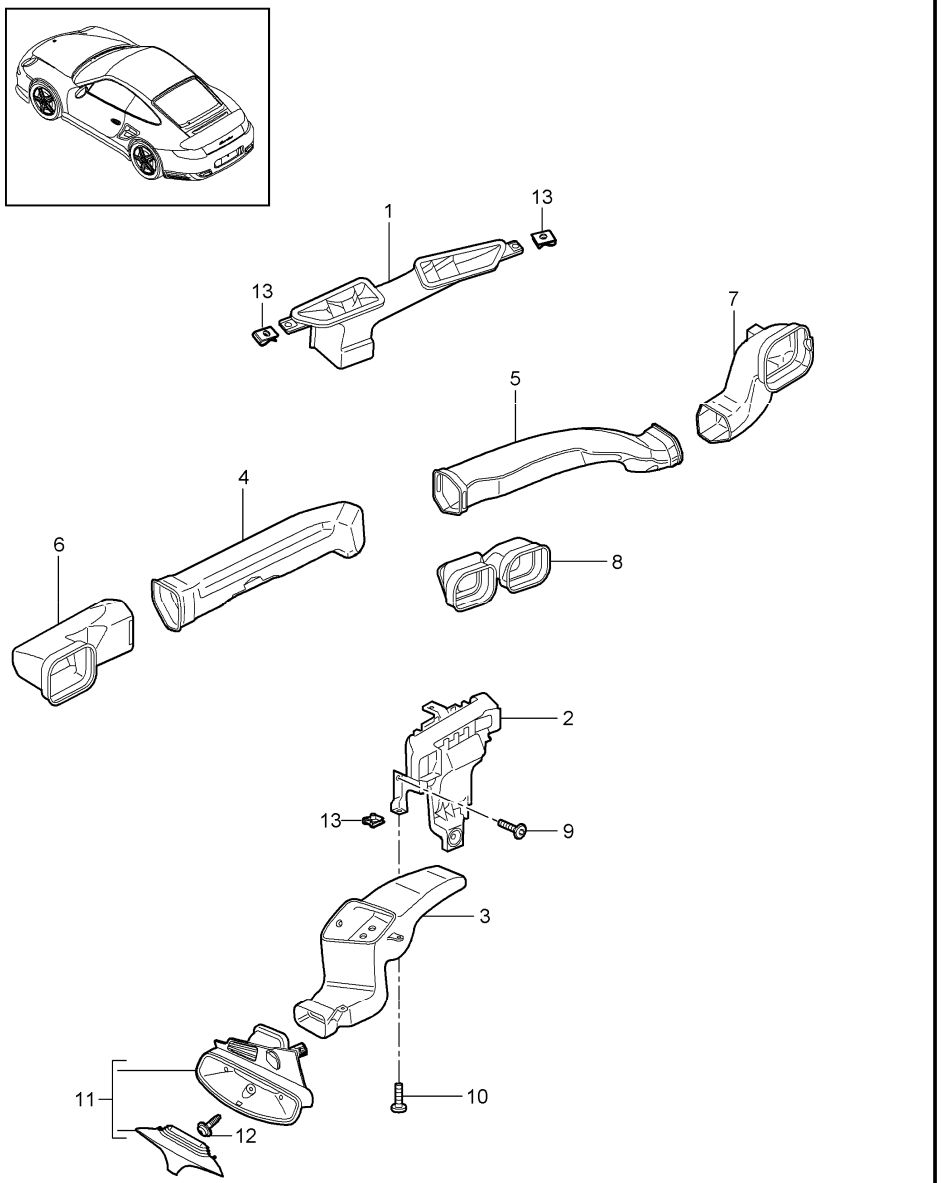

Pos	Part Number	Description	Remark	Qty	Model
		air distributor passenger compartment			
1	997 572 631 00	intermediate piece	/LL	1	I098
2	997 572 171 00	air distributor	/LL	1	I098
3	997 572 793 00	footwell outlet vent	/LL	1	I098
(3)	997 572 793 02	footwell outlet vent	/LL	1	I098/680
4	997 572 463 00	air duct	/LL/L	1	I098
5	997 572 464 00	air duct	/LL/R	1	I098
6	997 572 767 00	air duct	/LL/L	1	I098
7	997 572 768 00	air duct	/RL/R	1	I098
8	997 572 769 00	air duct		1	
9	999 919 118 09	oval-head screw		2	
10	999 073 339 09	tapping screw		2	
(11)	997 572 396 02	cover	/LL/R	1	I098/680
	01C	satin black			
(11)	997 572 396 03	cover	/LL/R	1	I098/680
	5V7	stone grey			
	N23	carrera red			
	5Z1	sand beige			
	8P9	cocoa			
	8W7	sea blue			
	8X8	terracotta			
	T13	brown/natural			
(12)	997 572 798 02	cover	/LL/R	1	I098/680
	01C	satin black			
12	997 572 798 03	cover lacquered	/LL	1	I098/680
	5V7	stone grey			
	N23	carrera red			
	5Z1	sand beige			

Pos	Part Number	Description	Remark	Qty	Model
	8P9	cocoa			
	8W7	sea blue			
	8X8	terracotta			
	T13	brown/natural			
13	999 073 345 09	lens-head screw M 5 x 18		1	I680
14	999 507 785 02	speed nut ST 4,2		3	
14	999 507 785 01	speed nut ST 4,2		3	

Pos	Part Number	Description	Remark	Qty	Model

Model	Year	MG	SG	Illustration	Restrictions	UPD	20:32	06.02.2010	PORSCHE	PET	PORSCHE
997T2	2010	8	13	813-05		248	USA / CANADA				

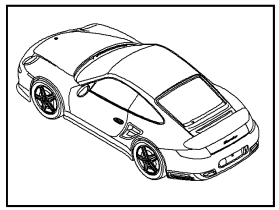

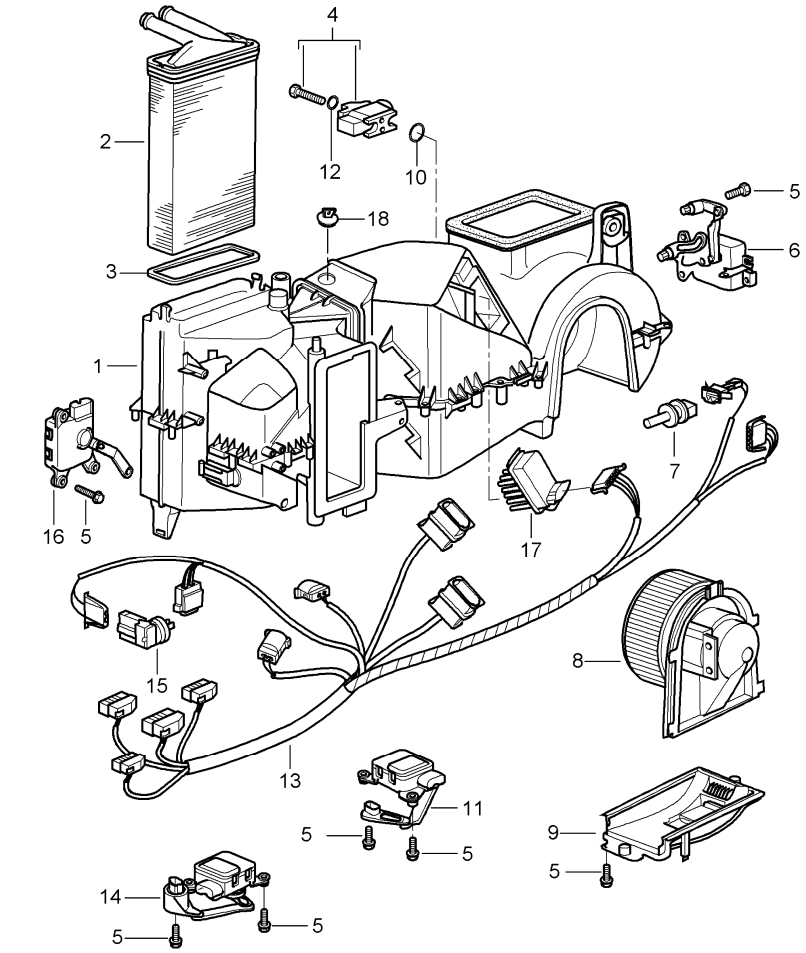

Pos	Part Number	Description	Remark	Qty	Model
		air conditioner single parts			
1	997 573 901 02	air conditioner without heat exchanger with evaporator	/LL	1	I098/573
2	997 572 129 00	heat exchanger		1	
3	996 572 913 00	gasket		1	
4	996 573 929 01	expansion valve		1	
5	900 143 102 02	combination screw		X	
6	996 573 915 00	electric motor fresh-air flap identification black	/LL	1 1 1 1	I098/573
7	955 572 304 10	temperature sensor		1	
8	996 624 107 01	blower	/LL	1	I098
9	996 573 905 00	lid		1	
10	999 707 596 40	o-ring 14x1,82		1	
11	996 573 919 02	electric motor temperature valve identification pink	/LL	1	I098
12	999 707 534 41	o-ring 17x2,00		1	
13	997 612 655 26	wiring harness	/LL	1	I098/573
--	997 612 664 01	wiring harness interference-suppr. choke		1	
14	996 573 921 02	electric motor defroster flap identification yellow	/LL	1	I098
15	1H0 907 543 A	temperature sensor		1	
16	996 573 917 02	electric motor central valve identification green	/LL	1	I098

Pos	Part Number	Description	Remark	Qty	Model
17	996 573 923 00	resistor		1	
--	996 573 927 00	blower outlet sensor		1	I573
--	1H0 819 943	screw		2	
18	997 573 935 00	stopper		1	

Model	Year	MG	SG	Illustration	Restrictions	UPD	20:32	06.02.2010	PET
997T2	2010	8	13	813-10		248	USA / CANADA		

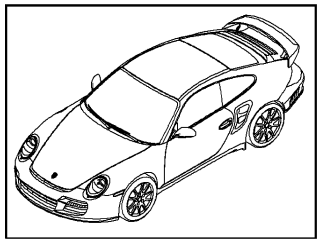

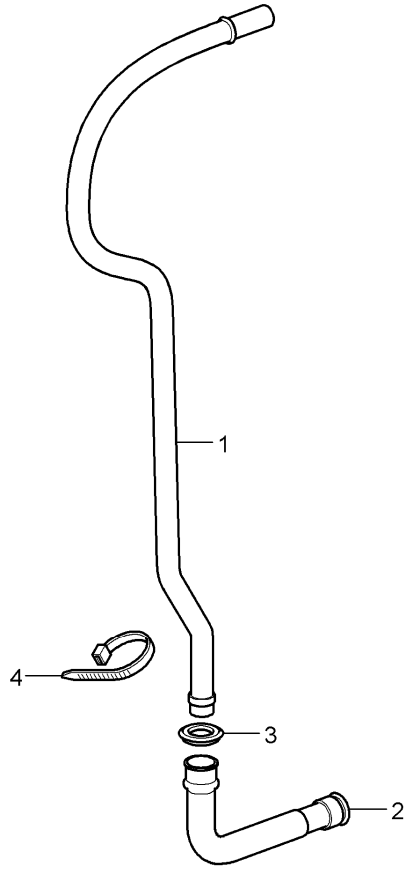

Pos	Part Number	Description	Remark	Qty	Model
		water drain tube mount air conditioner			
1	996 573 793 01	pipe	/LL	1	I098
2	997 573 797 00	connecting piece		1	
3	996 573 795 01	grommet		1	
4	999 513 049 40	tie-wrap		1	

Model	Year	MG	SG	Illustration	Restrictions	UPD	20:33	06.02.2010
997T2	2010	8	13	813-15		248	USA / CANADA	

PORSCHE PET PORSCHE

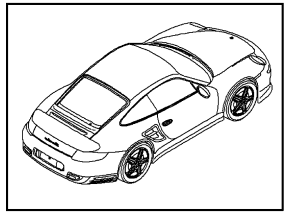

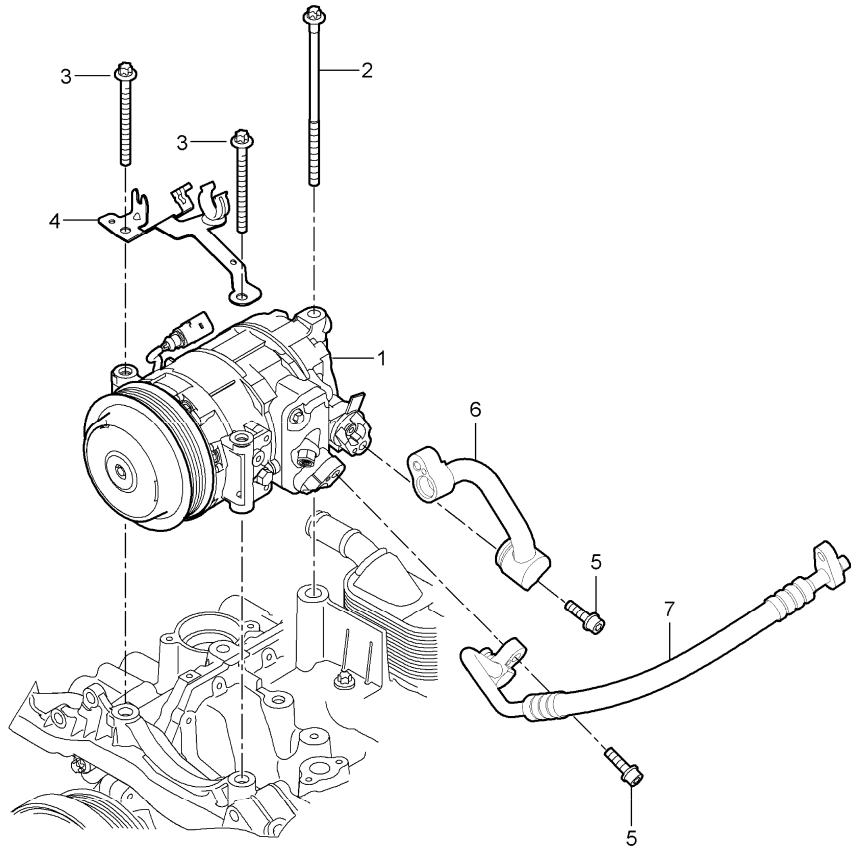

Pos	Part Number	Description	Remark	Qty	Model
		compressor			
1	9A1 126 011 02	compressor		1	
2	900 385 134 01	Outer hexagon round screw M 8 X 170		1	
3	900 385 102 01	Outer hexagon round screw M 8 X 90		2	
4		support see illustrations 01/07/10			
5	N 104 144 02	pan-head screw		2	
6		intake pipe see illustrations 8/13/25 Pos.7			
7		pressure line see illustrations 8/13/25 Pos.8			
--	000 043 200 04	oil for compressor 250 ml		1	

Model	Year	MG	SG	Illustration	Restrictions	UPD	20:33	06.02.2010	PORSCHE	PET	PORSCHE
997T2	2010	8	13	813-20		248	USA / CANADA				

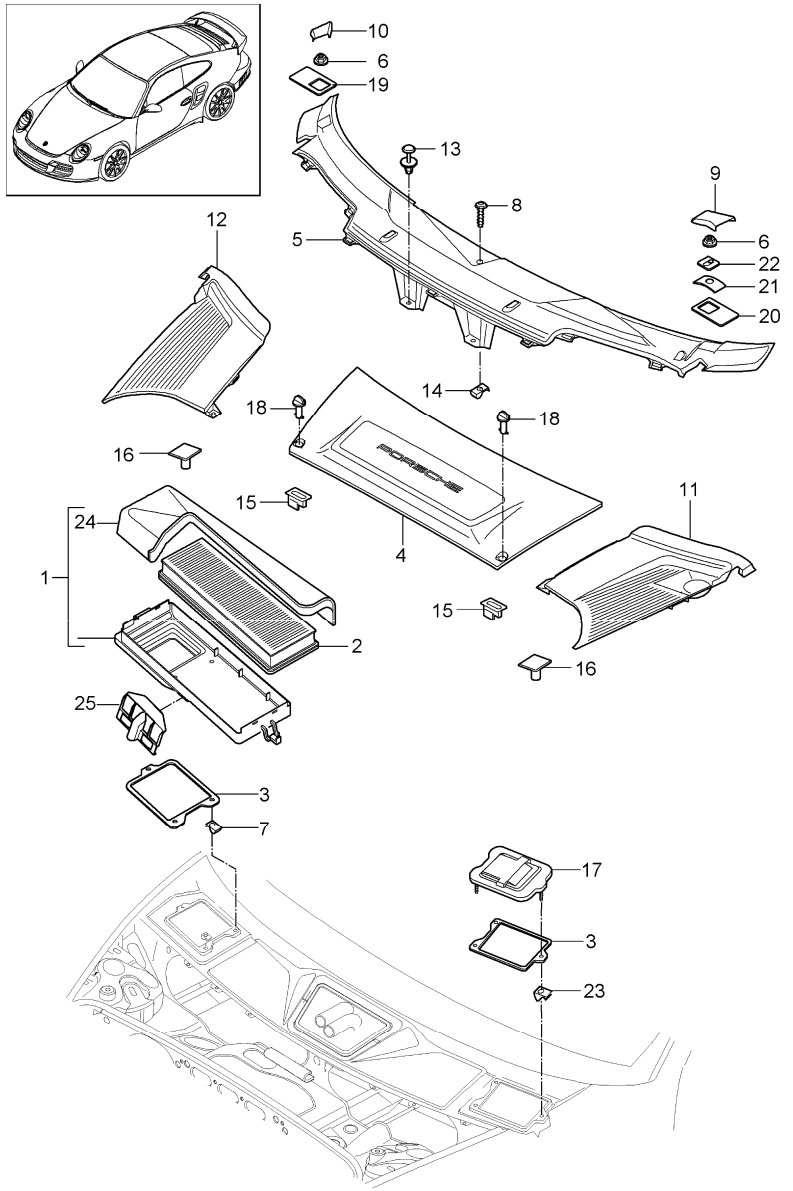

Pos	Part Number	Description	Remark	Qty	Model
		particle filter cowl panel covering			
1	997 572 019 04	housing	/LL	1	I098
2	997 571 219 01	particle filter		1	
3	997 572 221 00	gasket		1	
4	997 572 567 04	cover		1	
	FMT	black battery			
(4)	997 572 729 02	cover	/LL	1	I098
5	997 572 563 08	cover cowl	/LL	1	I098
	FMT	black			
6	999 076 071 02	hexagon nut M6		2	
7	999 507 348 01	speed nut		3	
8	N 906 487 04	tapping screw		1	
9	997 572 569 04	cap	/L	2	I098
	FMT	black			
10	997 572 570 04	cap	/R	1	I098
	FMT	black			
11	997 572 361 07	cover	/L	1	
	02A	black			
12	997 572 362 08	cover	/R	1	
	02A	black			
13	999 507 497 40	expansion rivet 8 X 14		2	
14	999 507 834 41	expander nut ST 4,8		1	
15	999 590 046 40	disc cam		2	
16	999 902 046 40	catch		1	
17	997 572 419 03	lid		2	
18	997 572 867 00	locking bolt		2	

Pos	Part Number	Description	Remark	Qty	Model
	02A	black			
--	997 572 763 00	cover		1	
19	997 572 842 01	pressure plate passenger's side	/LL/R	1	I098
20	997 572 841 00	pressure plate driver's side		1	
21	997 572 837 00	spring plate driver's side		1	
22	997 572 533 00	retainer plate driver's side		1	
23	999 591 855 02	speed nut		3	
24	997 572 729 02	cover particle filter	/LL	1	I098
25	997 572 862 01	support		1	

Model	Year	MG	SG	Illustration	Restrictions	UPD	20:33	06.02.2010
997T2	2010	8	13	813-25		248	USA / CANADA	

PORSCHE PET PORSCHE

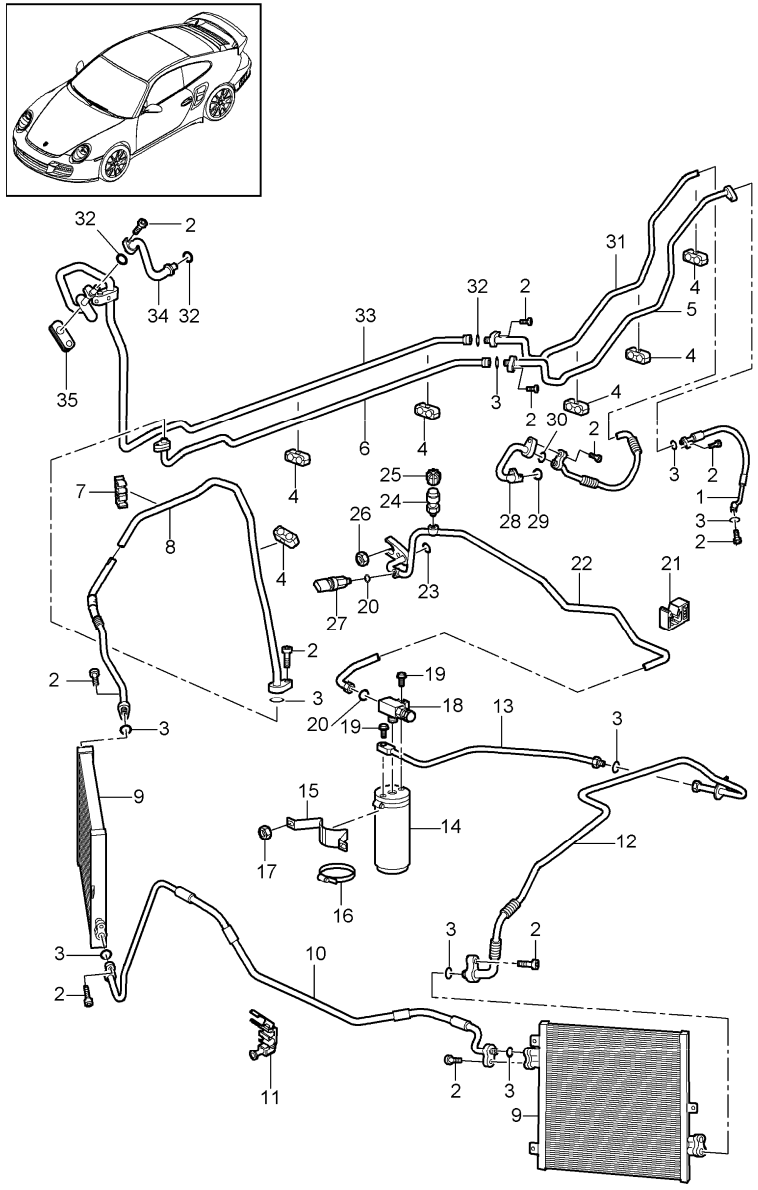

Pos	Part Number	Description	Remark	Qty	Model
		refrigerant circuit			
1	9A1 573 097 03	pressure line compressor		1	
2	900 067 247 02	combination screw M8 X 30		X	
3	999 707 434 41	o-ring 10,6 X 2,0		X	
4	999 511 230 40	cable holder		X	
5	997 573 096 03	pressure line		1	
6	996 573 092 02	pressure line		1	
7	996 355 547 01	support		1	
8	997 573 094 03	pressure line		1	
9	997 573 911 02	condenser		2	
10	997 573 103 03	pressure line		1	TURBO
11	996 347 543 00	cable holder 4,75 / 8,0		2	
12	997 573 105 03	pressure line condenser desiccator		1	
13	996 573 106 00	refrigerant line desiccator		1	
14	944 573 143 01	desiccator		1	
15	996 573 451 00	support		1	
16	999 512 349 01	hose clamp A50-70/9		1	
17	900 380 015 09	hexagon nut M6		2	
18	997 573 243 00	distributing piece		1	
19	900 075 340 01	combination screw M6 X 22		2	
20	999 707 555 41	o-ring 10,8 X 1,8		X	
21	999 591 922 40	support 4,8 / 8,0	/LL	1	I098
22	997 573 108 04	pressure line	/LL	1	I098

Pos	Part Number	Description	Remark	Qty	Model
23	999 707 531 41	o-ring 7,5 X 2,04		X	
24	996 573 466 00	valve pressure line		1	
(24)	996 573 465 00	valve intake pipe		1	
25	944 573 663 02	cap pressure line		1	
(25)	944 573 663 01	cap intake pipe		1	
26	900 377 010 09	hexagon nut M6		2	
27	955 613 137 01	pressure switch		1	
28	9A1 573 099 03	intake pipe		1	
29	999 707 439 41	o-ring 23,8 X 2,4		X	
30	999 707 558 41	o-ring 13,7 X 2,5		X	
31	997 573 095 05	intake pipe		1	
32	999 707 534 41	o-ring 17,0 X 2,0		X	
33	996 573 091 01	intake pipe		1	
34	996 573 093 06	intake pipe	/LL	1	I098
35	996 573 769 01	grommet		1	

Pos	Part Number	Description	Remark	Qty	Model

Model	Year	MG	SG	Illustration	Restrictions	UPD	20:33	06.02.2010
997T2	2010	8	13	813-26		248	USA / CANADA	

PORSCHE PET PORSCHE

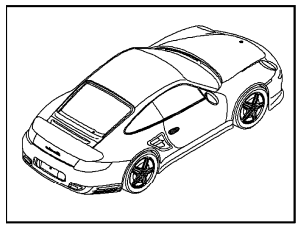

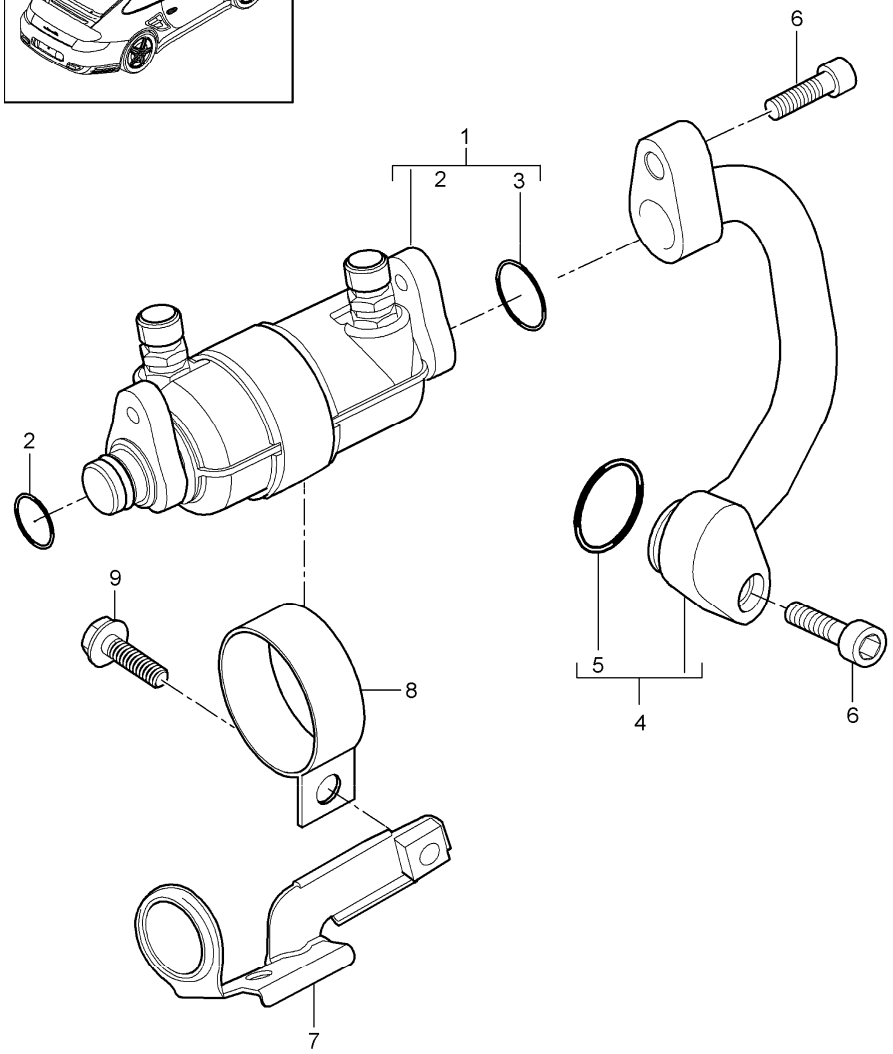

Pos	Part Number	Description	Remark	Qty	Model
		fuel cooler			
1	997 573 069 01	fuel cooler		1	
2	999 707 558 41	o-ring 13,70 X 2,50N		1	
3	999 707 534 41	o-ring 17,00 X 2,00N		1	
4	997 573 099 03	intake pipe		1	
5	999 707 439 41	o-ring 23,80 X 2,40N		1	
6	900 067 276 01	combination screw M8 X 35		2	
7	997 573 231 03	support		1	
8	999 512 202 01	clamp B1 49 X 20		1	
9	900 067 314 01	combination screw M8 X 25		1	

Model	Year	MG	SG	Illustration	Restrictions	UPD	20:34	06.02.2010
997T2	2010	8	13	813-45		248	USA / CANADA	

PORSCHE PET PORSCHE

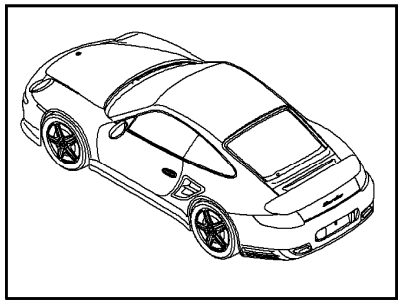

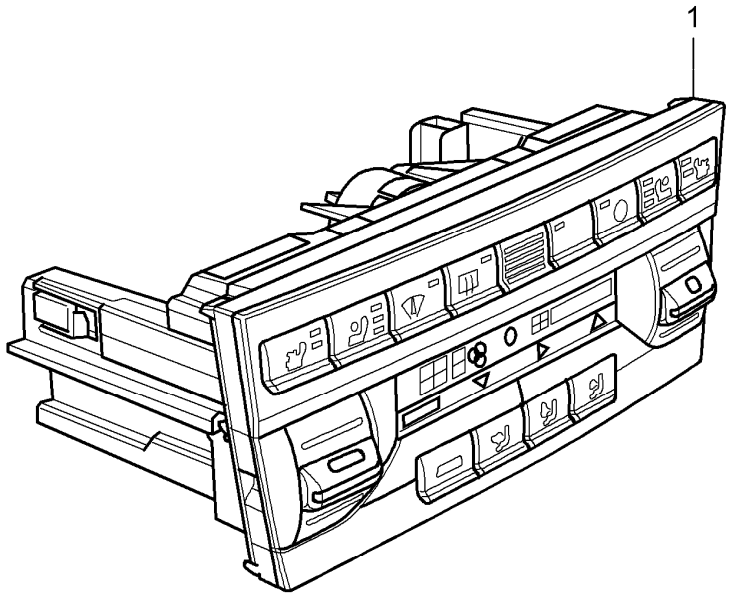

Pos	Part Number	Description	Remark	Qty	Model
		control switch			
(1)	997 653 201 03	control part		1	I573
	FTC	Mattschwarz/Galvanosilber			
(1)	997 653 211 04	control part		1	I342/573
	FTC	Mattschwarz/Galvanosilber			
(1)	997 653 221 04	control part		1	I342/541/573
	FTC	Mattschwarz/Galvanosilber			

Model	Year	MG	SG	Illustration	Restrictions	UPD	20:34	06.02.2010
997T2	2010	8	17	817-00		248	USA / CANADA	

PORSCHE PET PORSCHE

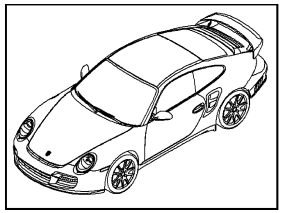

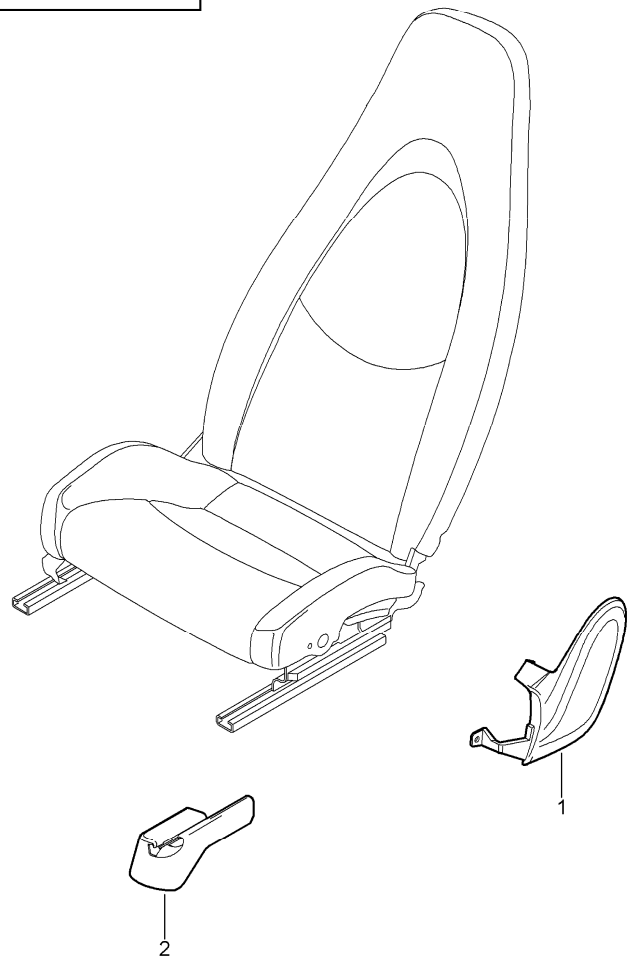

Pos	Part Number	Description	Remark	Qty	Model
		front seat complete not available comfort seat			
1	997 521 315 02	trim cover mounting component	/L	1	I375/377/437
	D07	volcano grey			
(1)	997 521 316 03	trim cover	/R	1	I376/378/438 I560
		mounting component			
	D07	volcano grey			
2	997 521 359 01	rail seat rail	/L	1	I375/388
	01C	satin black			
(2)	997 521 362 00	rail	/R	1	I375/377/378 I388/437/438
		seat rail			
	01C	satin black			
(2)	997 521 361 00	rail	/L	1	I376/377/378 I389/437/438
		seat rail			
	01C	satin black			
(2)	997 521 360 01	rail seat rail	/R	1	I376/389
	01C	satin black			

Model	Year	MG	SG	Illustration	Restrictions	UPD	20:34	06.02.2010	PORSCHE	PET	PORSCHE
997T2	2010	8	17	817-02		248	USA / CANADA				

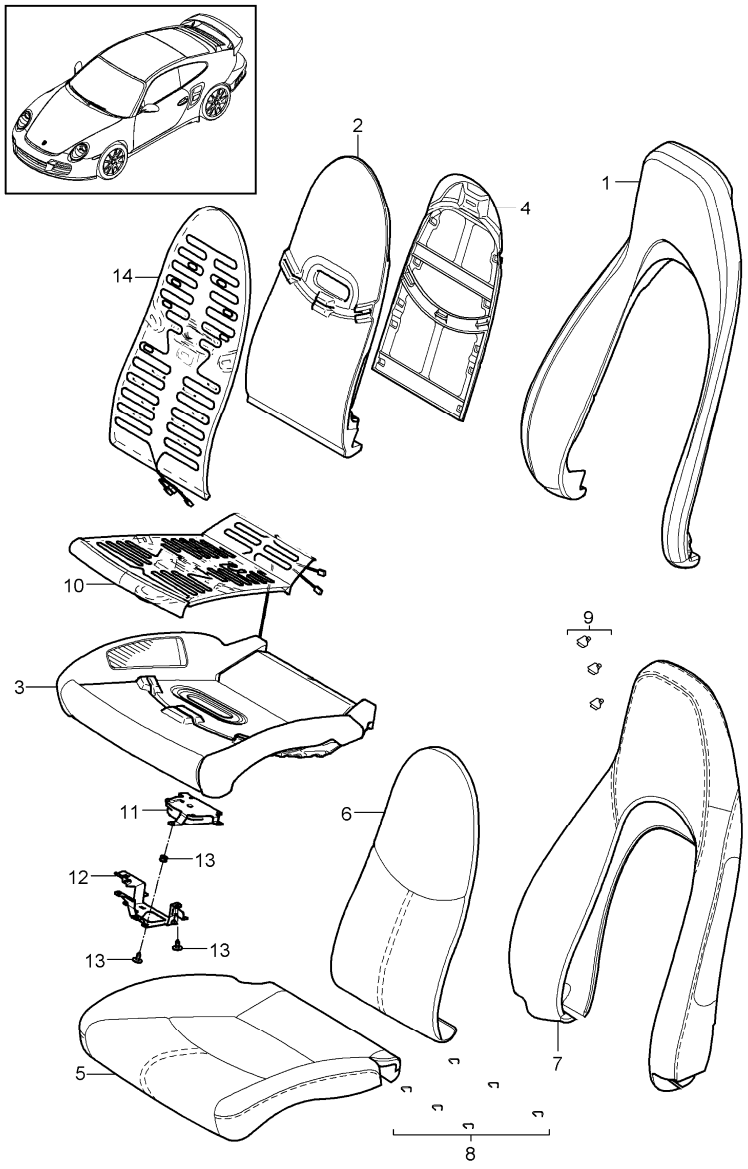

Pos	Part Number	Description	Remark	Qty	Model
		foam part cover standard seat comfort seat			
1	997 521 535 00	foam part backrest outer part		1	I437/438
(1)	997 521 535 03	foam part backrest outer part		1	I437/438/541
2	997 521 581 00	foam part backrest centre part		1	I375/376/377 I378/437/438
(2)	997 521 581 01	foam part backrest centre part		1	I437/438/541
3	997 521 571 00	foam part seat cushion with heating		1	I437/438
(3)	997 521 571 03	foam part seat cushion with heating		1	I438/560
(3)	997 521 571 06	foam part seat cushion with heating		1	I437/438/541
(3)	997 521 571 07	foam part seat cushion with heating		1	I438/541/560
4	997 521 551 01	cushion carrier backrest		1	
5	997 521 161 01	cover for cushion		1	I437/438/983
	FLC	black			
	FLF	stone grey			
	FLJ	sand beige			
	FLM	sea blue			
	FLQ	terracotta			
	FLR	cocoa			
	VAA	dark grey/natural			

Pos	Part Number	Description	Remark	Qty	Model
	VAB	brown/natural			
	VAC	carrera red			
(5)	997 521 161 10	cover for cushion		1	I437/438/541 I983
	FLC	black			
	FLF	stone grey			
	FLJ	sand beige			
	FLM	sea blue			
	FLQ	terracotta			
	FLR	cocoa			
	VAA	dark grey/natural			
	VAB	brown/natural			
	VAC	carrera red			
(5)	997 521 161 02	cover for cushion		1	I437/438/982
	FLC	black			
	FLF	stone grey			
	FLJ	sand beige			
	FLM	sea blue			
	FLQ	terracotta			
	FLR	cocoa			
	VAA	dark grey/natural			
	VAB	brown/natural			
	VAC	carrera red			
6	997 521 151 00	backrest cushion cover		1	I375/376/377 I378/437/438 I983
		centre part			
	8YR	black			
	5X5	stone grey			
	8G1	sand beige			
	3S8	sea blue			
	9N2	terracotta			
	9Q3	cocoa			
	D11	dark grey/natural			
	T11	brown/natural			
	N11	carrera red			
(6)	997 521 151 03	backrest cushion cover		1	I437/438/541 I983
		centre part			
	8YR	black			
	5X5	stone grey			
	8G1	sand beige			
	3S8	sea blue			
	9N2	terracotta			
	9Q3	cocoa			
	D11	dark grey/natural			
	T11	brown/natural			
	N11	carrera red			
(6)	997 521 151 01	backrest cushion cover centre part		1	I437/438/982
	8YR	black			
	5X5	stone grey			
	8G1	sand beige			
	3S8	sea blue			
	9N2	terracotta			
	9Q3	cocoa			
	D11	dark grey/natural			
	T11	brown/natural			
	N11	carrera red			
7	997 521 141 01	backrest cover outer part	/L	1	I437/982/983
	FLC	black			

Pos	Part Number	Description	Remark	Qty	Model
	FLF	stone grey			
	FLJ	sand beige			
	FLM	sea blue			
	FLQ	terracotta			
	FLR	cocoa			
	VAA	dark grey/natural			
	VAB	brown/natural			
	VAC	carrera red			
(7)	997 521 141 05	backrest cover outer part	/L	1	I437/541/983
	FLC	black			
	FLF	stone grey			
	FLJ	sand beige			
	FLM	sea blue			
	FLQ	terracotta			
	FLR	cocoa			
	VAA	dark grey/natural			
	VAB	brown/natural			
	VAC	carrera red			
(7)	997 521 142 01	backrest cover outer part	/R	1	I438/982/983
	FLC	black			
	FLF	stone grey			
	FLJ	sand beige			
	FLM	sea blue			
	FLQ	terracotta			
	FLR	cocoa			
	VAA	dark grey/natural			
	VAB	brown/natural			
	VAC	carrera red			

Pos	Part Number	Description	Remark	Qty	Model
(7)	997 521 142 05	backrest cover outer part	/R	1	I438/541/983
	FLC	black			
	FLF	stone grey			
	FLJ	sand beige			
	FLM	sea blue			
	FLQ	terracotta			
	FLR	cocoa			
	VAA	dark grey/natural			
	VAB	brown/natural			
	VAC	carrera red			
(7)	997 521 941 01	backrest cover outer part	/L	1	IXSC/437/982 I983
	8YR	black			
	5X5	stone grey			
	8G1	sand beige			
	3S8	sea blue			
	9N2	terracotta			
	9Q3	cocoa			
	D11	dark grey/natural			
	T11	brown/natural			
	N11	carrera red			
(7)	997 521 942 01	backrest cover outer part	/R	1	IXSC/438/982 I983
	8YR	black			
	5X5	stone grey			
	8G1	sand beige			
	3S8	sea blue			
	9N2	terracotta			

Pos	Part Number	Description	Remark	Qty	Model
	9Q3	cocoa			
	D11	dark grey/natural			
	T11	brown/natural			
	N11	carrera red			
8	997 521 837 00	clip padding		6	
(8)	000 043 207 39	fixing clip seat		3	I541
9	997 521 897 00	clip backrest cover		5	
(9)	000 043 207 39	fixing clip backrest cover		3	I541
10	997 521 721 00	airbag seat cushion		1	I437/438/541
11	997 624 335 00	electric motor seat cushion		1	I541
12	997 521 661 00	support electric motor seat cushion		1	I437/438/541
13	000 043 207 38	set of fastening parts electric motor seat cushion backrest		13	I541
14	997 521 731 00	airbag backrest		1	I437/438/541
14	997 521 731 00	airbag backrest		1	I437/438/541
15	997 521 709 03	lumbar support airbag with memory		1	I437/438/537 I538/541
(15)	997 521 709 02	lumbar support airbag without memory		1	I437/438/541

Pos	Part Number	Description	Remark	Qty	Model

Model	Year	MG	SG	Illustration	Restrictions	UPD	20:34	06.02.2010	PET
997T2	2010	8	17	817-04		248	USA / CANADA		

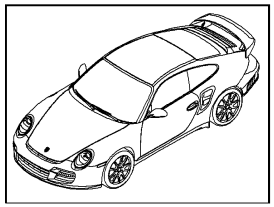

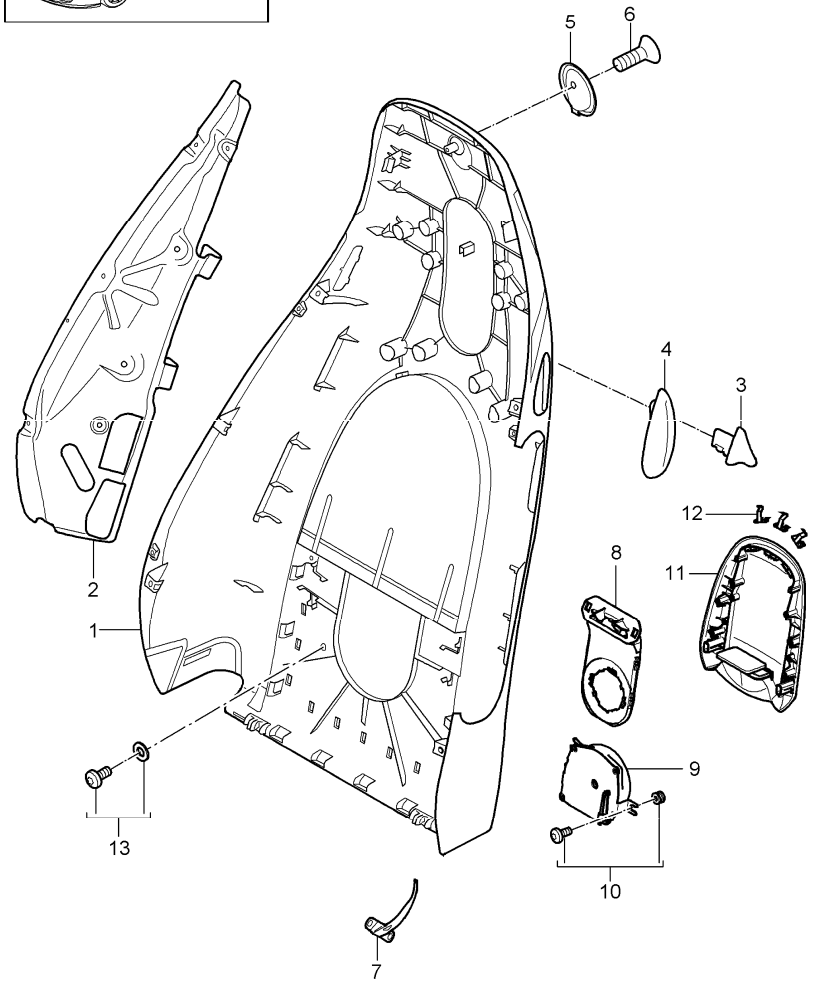

Pos	Part Number	Description	Remark	Qty	Model
		backrest shell standard seat comfort seat accessories			
1	997 521 303 10	backrest shell	/L	1	I437/982/983
	A80	black			
	B80	stone grey			
	T80	sand beige			
	E80	sea blue			
	M80	terracotta			
	R80	cocoa			
(1)	997 521 303 15	backrest shell	/L	1	I437/541/983
	A80	black			
	B80	stone grey			
	T80	sand beige			
	E80	sea blue			
	M80	terracotta			
	R80	cocoa			
(1)	997 521 304 10	backrest shell	/R	1	I438/982/983
	A80	black			
	B80	stone grey			
	T80	sand beige			
	E80	sea blue			
	M80	terracotta			
	R80	cocoa			
(1)	997 521 304 15	backrest shell	/R	1	I438/541/983
	A80	black			
	B80	stone grey			
	T80	sand beige			
	E80	sea blue			

Pos	Part Number	Description	Remark	Qty	Model
	M80	terracotta			
	R80	cocoa			
(1)	997 521 303 11	backrest shell	/L	1	I437/983/998
	D11	dark grey/natural			
	T11	brown/natural			
	N11	carrera red			
(1)	997 521 303 16	backrest shell	/L	1	I437/541/983 I998
	D11	dark grey/natural			
	T11	brown/natural			
	N11	carrera red			
(1)	997 521 304 11	backrest shell	/R	1	I438/982/983 I998
	D11	dark grey/natural			
	T11	brown/natural			
	N11	carrera red			
(1)	997 521 304 16	backrest shell	/R	1	I438/541/983 I998
	D11	dark grey/natural			
	T11	brown/natural			
	N11	carrera red			
2	997 521 319 00	bracket backrest side bolster	/L	1	
(2)	997 521 320 00	bracket backrest side bolster	/R	1	
3	997 521 623 02	control button backrest locking lever	/L	1	
	V05	galvano silver			
(3)	997 521 624 02	control button backrest locking lever	/R	1	
	V05	galvano silver			
4	997 521 621 02	rosette backrest locking lever	/L	1	I437/438

Pos	Part Number	Description	Remark	Qty	Model
	D07	volcano grey			
(4)	997 521 622 02	rosette backrest locking lever		1	I437/438
	D07	volcano grey			
5	997 521 373 01	coat hook		1	
	D07	volcano grey			
6	999 919 232 09	screw M5 X 20 coat hook		1	I369/370/437 I438
7	997 521 783 00	support panel backrest shell	/L	1	
(7)	997 521 784 00	support panel backrest shell	/R	1	
8	997 521 733 00	air duct backrest shell		1	I437/438/541
9	997 624 337 00	electric motor vented backrest		1	I541
10	000 043 207 38	set of fastening parts electric motor		1	I541
11	997 521 491 01	cover		1	I437/438/541 I983
		fan			
	A80	black			
	B80	stone grey			
	T80	sand beige			
	E80	sea blue			
	M80	terracotta			
	R80	cocoa			
(11)	997 521 491 02	cover		1	I437/438/541 I983/998
		fan			
	D11	dark grey/natural			
	T11	brown/natural			
	N11	carrera red			

Pos	Part Number	Description	Remark	Qty	Model
12	000 043 207 40	clamp mount cover fan		3	I541
13	000 043 207 41	set of fastening parts mount cover fan		1	I541

Model	Year	MG	SG	Illustration	Restrictions	UPD	20:34	06.02.2010	PET
997T2	2010	8	17	817-06		248	USA / CANADA		

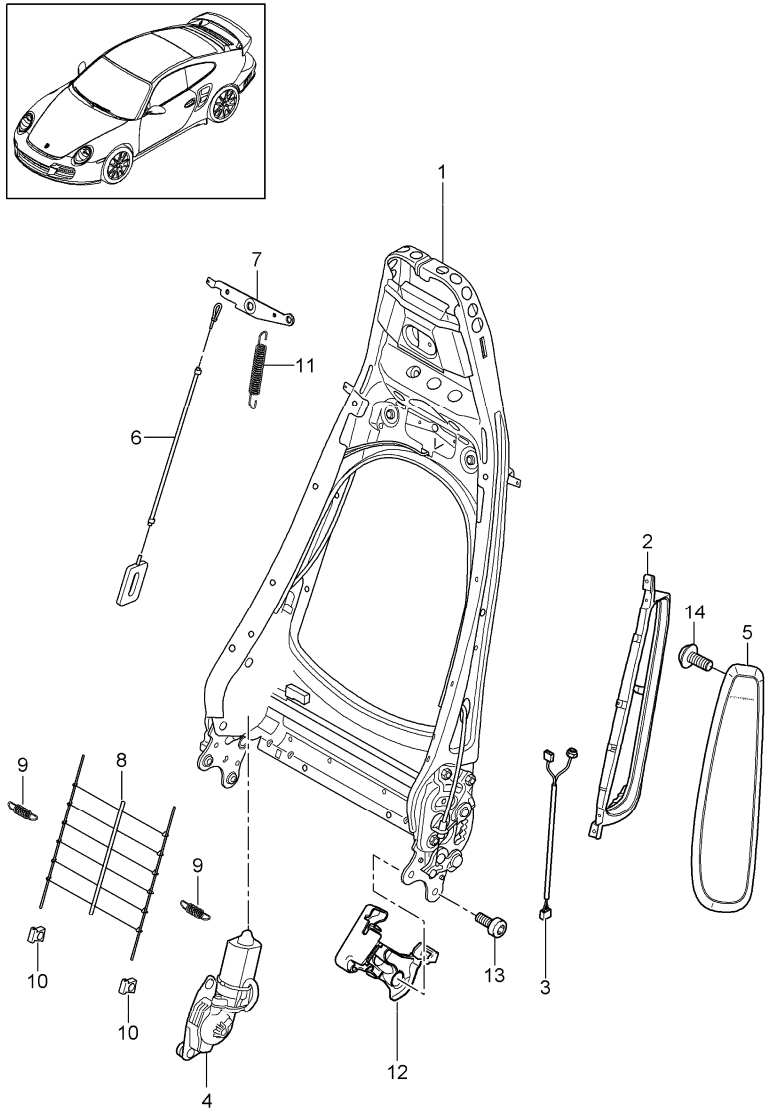

Pos	Part Number	Description	Remark	Qty	Model
		backrest frame standard seat comfort seat			
1	997 521 329 02	backrest frame without memory		1	I377/378/437 I438
(1)	997 521 329 03	backrest frame with memory		1	I537/538
2	997 521 533 00	cushion carrier side airbag	/L	1	I437
(2)	997 521 534 00	cushion carrier side airbag	/R	1	I438
3	997 612 785 01	wiring harness side airbag	/L	1	I537
(3)	997 612 786 01	wiring harness side airbag	/R	1	I538
4	997 624 331 00	electric motor backrest frame memory		1	I537/538
(4)	997 624 321 00	electric motor backrest frame without memory		1	I377/378/437 I438
5	997 803 081 02	side airbag	/L	1	I437
	A03	black			
	5V7	stone grey			
	5Z1	sand beige			
	8W7	sea blue			
	8X8	terracotta			
	8P9	cocoa			
	T13	brown/natural			
	N23	carrera red			
(5)	997 803 082 02	side airbag	/R	1	I438
	A03	black			

Pos	Part Number	Description	Remark	Qty	Model
	5V7	stone grey			
	5Z1	sand beige			
	8W7	sea blue			
	8X8	terracotta			
	8P9	cocoa			
	T13	brown/natural			
	N23	carrera red			
6	997 521 485 00	bowden cable backrest frame		2	I437/438
7	997 521 375 00	release		1	I377/378/437 I438
		backrest frame			
8	997 521 855 00	grille		1	I377/378/437 I438
		backrest frame			
9	997 521 893 00	tension spring		2	I377/378/437 I438
		inner spring			
10	997 521 895 00	clip		2	I377/378/437 I438
		inner spring			
11	997 521 797 00	tension spring		1	I377/378/437 I438
		release backrest			
12	997 521 335 01	cover	/L	1	I377/378/437 I438
		mounting component inner			
	D07	volcano grey			
(12)	997 521 336 01	cover	/R	1	I377/378/437 I438
		mounting component inner			
	D07	volcano grey			
13	999 073 375 09	screw mount backrest seat adjuster		4	
14	999 073 306 09	screw mount side airbag		2	

Model	Year	MG	SG	Illustration	Restrictions	UPD	20:35	06.02.2010
997T2	2010	8	17	817-08		248	USA / CANADA	

PORSCHE PET PORSCHE

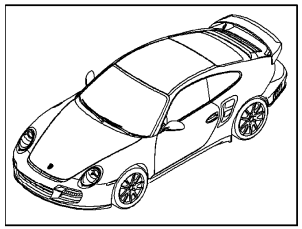

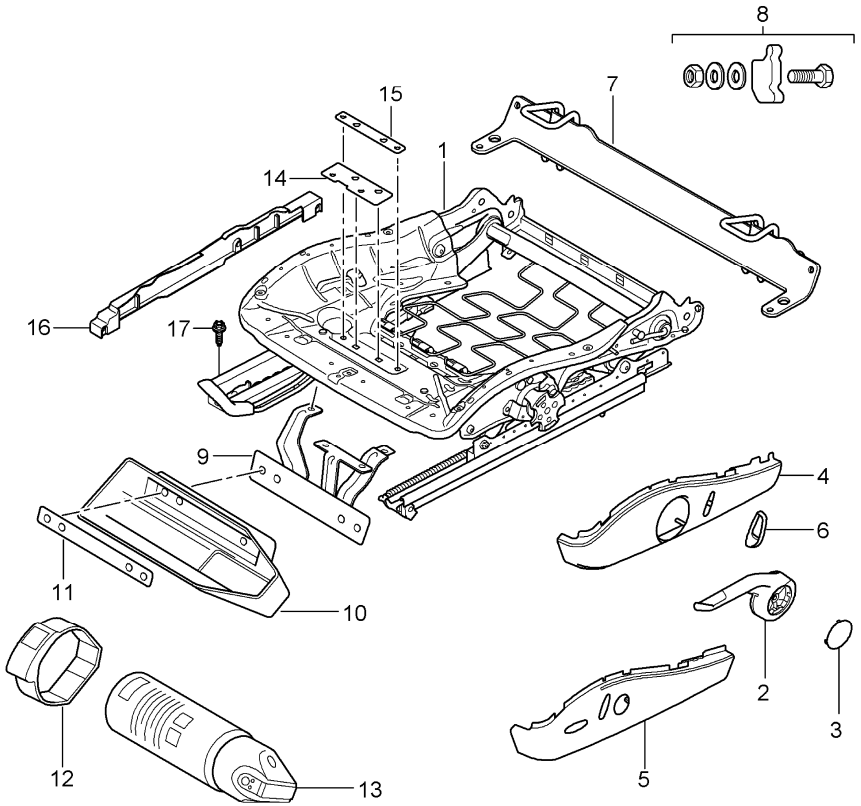

Pos	Part Number	Description	Remark	Qty	Model
		seat adjuster standard seat comfort seat			
1	997 521 201 24	seat adjuster electric without memory driver's side	/L	1	I437/480
(1)	997 521 201 24	seat adjuster electric without memory driver's side	/L	1	I437/480/553
(1)	997 521 201 26	seat adjuster electric without memory driver's side	/L	1	I437/541
(1)	997 521 201 26	seat adjuster electric without memory driver's side	/L	1	I437/480/541 I553
(1)	997 521 201 28	seat adjuster electric without memory driver's side	/L	1	I250/437/553
(1)	997 521 202 30	seat adjuster electric without memory driver's side	/R	1	I438
(1)	997 521 202 24	seat adjuster electric without memory driver's side	/R	1	I438/560
(1)	997 521 202 32	seat adjuster electric without memory driver's side	/R	1	I438/541

Pos	Part Number	Description	Remark	Qty	Model
(1)	997 521 201 25	seat adjuster electric with memory driver's side	/L	1	I437/537
(1)	997 521 201 25	seat adjuster electric with memory driver's side	/L	1	I437/480/537 I553
(1)	997 521 201 27	seat adjuster electric with memory driver's side	/L	1	I437/537/541
(1)	997 521 201 27	seat adjuster electric with memory driver's side	/L	1	I437/480/537 I541/553
(1)	997 521 201 29	seat adjuster electric with memory driver's side	/L	1	I250/437/537 I553
(1)	997 521 201 30	seat adjuster electric with memory driver's side	/L	1	I250/437/537 I541/553
(1)	997 521 202 31	seat adjuster electric with memory driver's side	/R	1	I438/538
(1)	997 521 202 33	seat adjuster electric with memory driver's side	/R	1	I438/538/541
2	997 521 627 01	actuating lever height adjustment	/L	1	I369/375
	V05	galvano silver			
(2)	997 521 628 01	actuating lever height adjustment	/R	1	I370/376
	V05	galvano silver			
3	997 521 629 01	cap		2	I369/370/375 I376
		actuating lever			
	D07	volcano grey			
5	997 521 325 07	trim for switch	/L	1	I437
	D07	volcano grey			
(5)	997 521 326 07	trim for switch	/R	1	I438
	D07	volcano grey			
(5)	997 521 326 10	trim for switch	/R	1	I438/560
	D07	volcano grey			
6	997 521 631 01	control button		1	I437/438
		backrest			
9	997 521 251 00	support fire extinguisher		1	I098/509
10	7PP 882 650	cup fire extinguisher		1	I509
11	7PP 882 649	support cup fire extinguisher		1	I509
12	7PP 882 645	restraining strap fire extinguisher		1	I509
13	996 722 115 00	fire extinguisher Information available Information available		1	I509
14	997 521 841 00	reinforcement front		1	I509
15	997 521 843 00	reinforcement rear		1	I509
16	997 521 427 01	cover sensor weight	/L	1	I438/560
	01C	satin black			

Pos	Part Number	Description	Remark	Qty	Model
(16)	997 521 426 01	cover sensor weight	/R	1	I438/560
	01C	satin black			
17	999 141 047 01	torx screw seat rail mount		4	

Pos	Part Number	Description	Remark	Qty	Model

Model	Year	MG	SG	Illustration	Restrictions	UPD	20:35	06.02.2010	PET
997T2	2010	8	17	817-09		248	USA / CANADA		

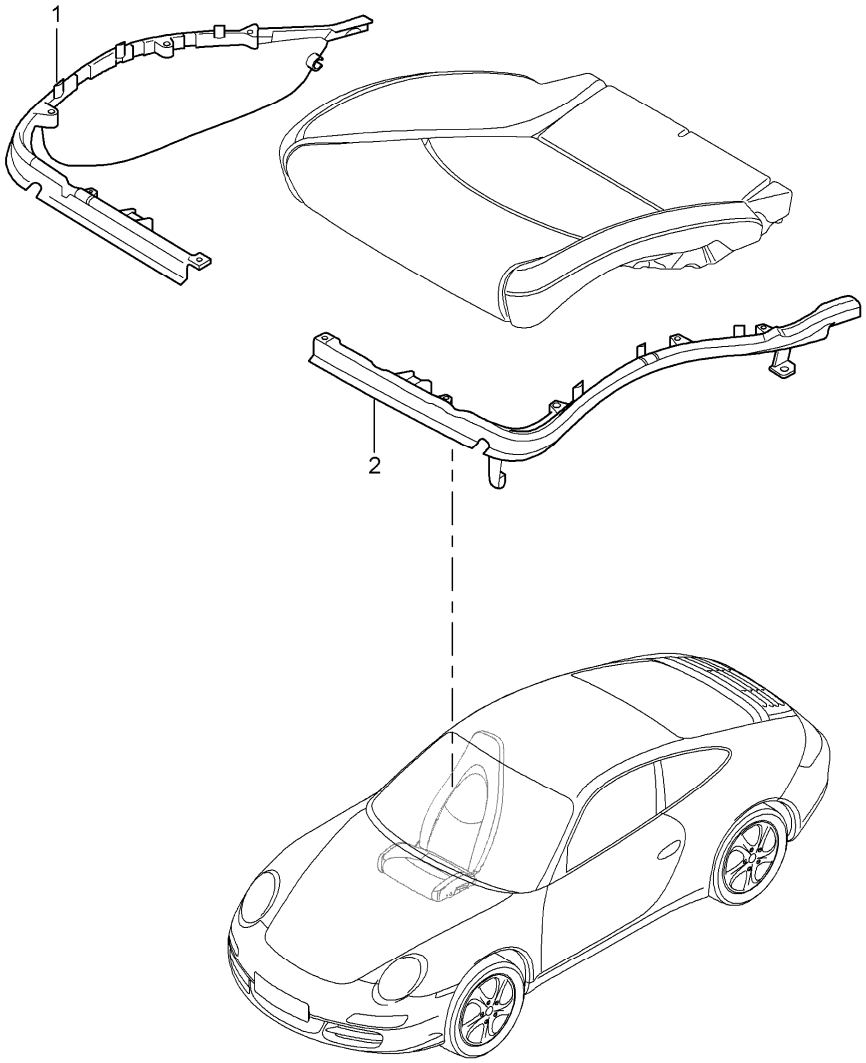

Pos	Part Number	Description	Remark	Qty	Model
		cushion carrier frame seat surface standard seat comfort seat			
1	997 521 547 00	frame inner	/L	1	I438
(1)	997 521 548 00	frame inner	/R	1	I437
2	997 521 545 00	frame outer	/L	1	I437
(2)	997 521 546 00	frame outer	/R	1	I438
(2)	997 521 546 01	frame outer	/R	1	I438/560

Model	Year	MG	SG	Illustration	Restrictions	UPD	20:35	06.02.2010	PORSCHE	PET	PORSCHE
997T2	2010	8	17	817-10		248	USA / CANADA				

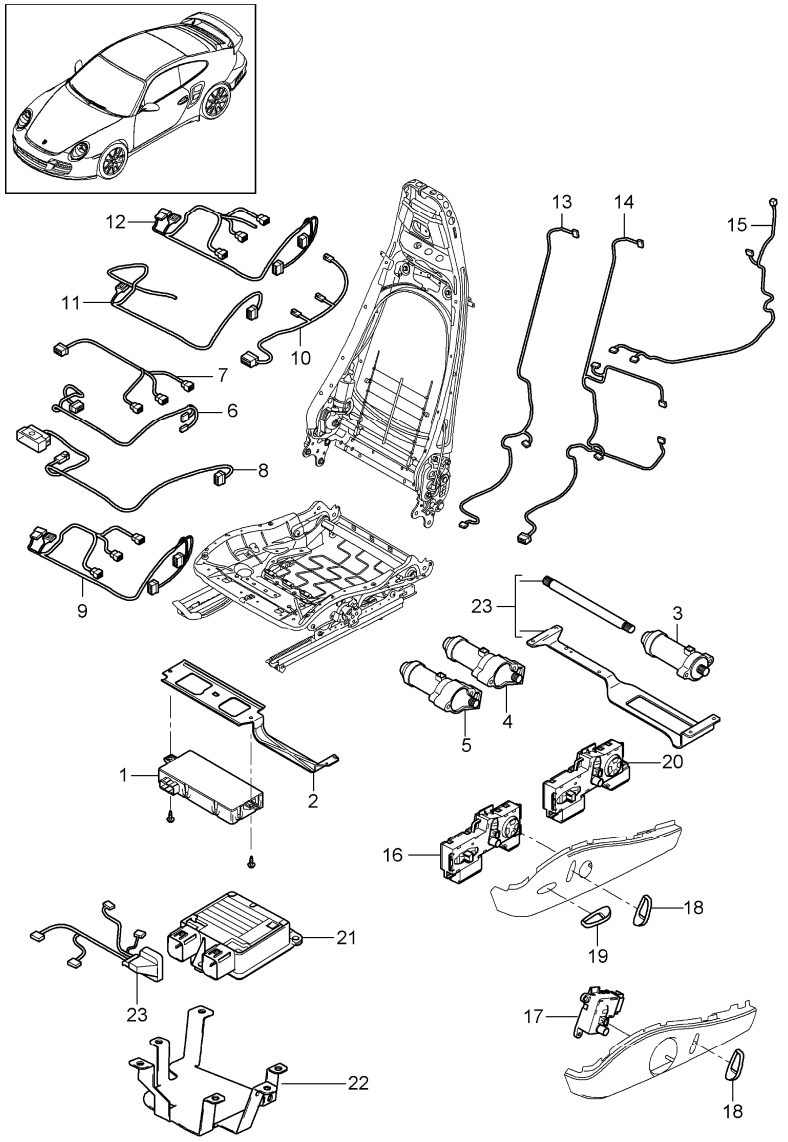

Pos	Part Number	Description	Remark	Qty	Model
		wiring harnesses switch control unit electric motor standard seat comfort seat			
1	997 618 537 07	control unit seating position control		1	I537/538
2	997 521 643 01	support control unit seating position control		1	I437/438/537 I538
3	997 624 322 00	electric motor seat adjuster lengthways without memory		1	I437/438
(3)	997 624 332 00	electric motor seat adjuster lengthways with memory		1	I537/538
4	997 624 322 00	electric motor seat adjuster height adjustment without memory		1	I437/438
(4)	997 624 332 00	electric motor seat adjuster height adjustment with memory		1	I537/538
5	997 624 323 00	electric motor seat adjuster tilt angle without memory		1	I437/438
(5)	997 624 333 00	electric motor seat adjuster tilt angle with memory		1	I537/538
6	997 612 684 00	wiring harness seat adjuster memory		1	I537/538

Pos	Part Number	Description	Remark	Qty	Model
7	997 612 690 00	wiring harness lengthways height adjustment memory		1	I537/538
9	997 612 683 01	wiring harness switch seat adjuster without memory		1	I437/438
10	997 612 657 00	wiring harness seat		2	I541
12	997 612 659 00	wiring harness comfort seat electric		1	I437/438/541
13	997 612 689 00	wiring harness lumbar support without memory		1	I437/438
14	997 612 687 00	wiring harness lumbar backrest memory		1	I437/438/537 I538
15	997 612 685 01	wiring harness backrest	/L	1	I437
(15)	997 612 686 01	wiring harness backrest	/R	1	I438
16	997 613 721 01	switch seat adjuster memory switch	/L	1	I437/537
	V05	galvano silver			
(16)	997 613 722 01	switch seat adjuster memory switch	/R	1	I438/538
	V05	galvano silver			
18	997 521 631 01	control button backrest		1	I437/438
	V05	galvano silver			
19	997 521 633 02	control button seat cushion		1	I437/438
	V05	galvano silver			
20	997 613 717 01	switch seat adjuster without memory	/L	1	I437
	V05	galvano silver			
(20)	997 613 718 01	switch seat adjuster without memory	/R	1	I438
	V05	galvano silver			
(21)	997 618 233 05	control unit seat occupancy detection		1	I438/560
22	997 521 646 00	support control unit seat occupancy detection		1	I438/560
23	997 612 688 01	wiring harness seat occupancy detection		1	I438/560
(24)	997 521 901 00	repair kit pliable shaft engine bracket		1	
-	999 650 973 40	clip mount wiring harness seat occupancy detection		1	

Model	Year	MG	SG	Illustration	Restrictions	UPD	20:35	06.02.2010	PORSCHE	PET	PORSCHE
997T2	2010	8	17	817-15		248	USA / CANADA				

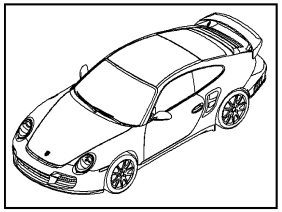

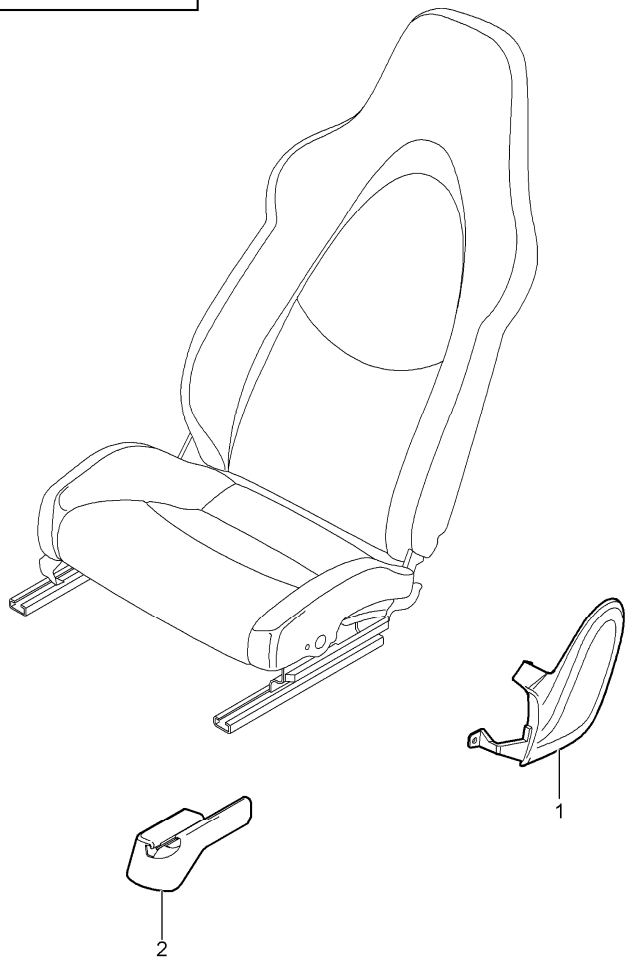

Pos	Part Number	Description	Remark	Qty	Model
		front seat complete not available sports seat			
1	997 521 315 02	trim cover mounting component	/L	1	I375/377
	D07	volcano grey			
(1)	997 521 316 03	trim cover mounting component	/R	1	I376/378/560
	D07	volcano grey			
2	997 521 359 01	rail seat rail	/L	1	I375/388
	01C	satin black			
(2)	997 521 362 00	rail seat rail	/R	1	I375/377/378
	01C	satin black			
(2)	997 521 361 00	rail seat rail	/L	1	I376/377/378
	01C	satin black			
(2)	997 521 360 01	rail seat rail	/R	1	I376/389
	01C	satin black			

Model	Year	MG	SG	Illustration	Restrictions	UPD	20:35	06.02.2010
997T2	2010	8	17	817-17		248	USA / CANADA	

PORSCHE PET PORSCHE

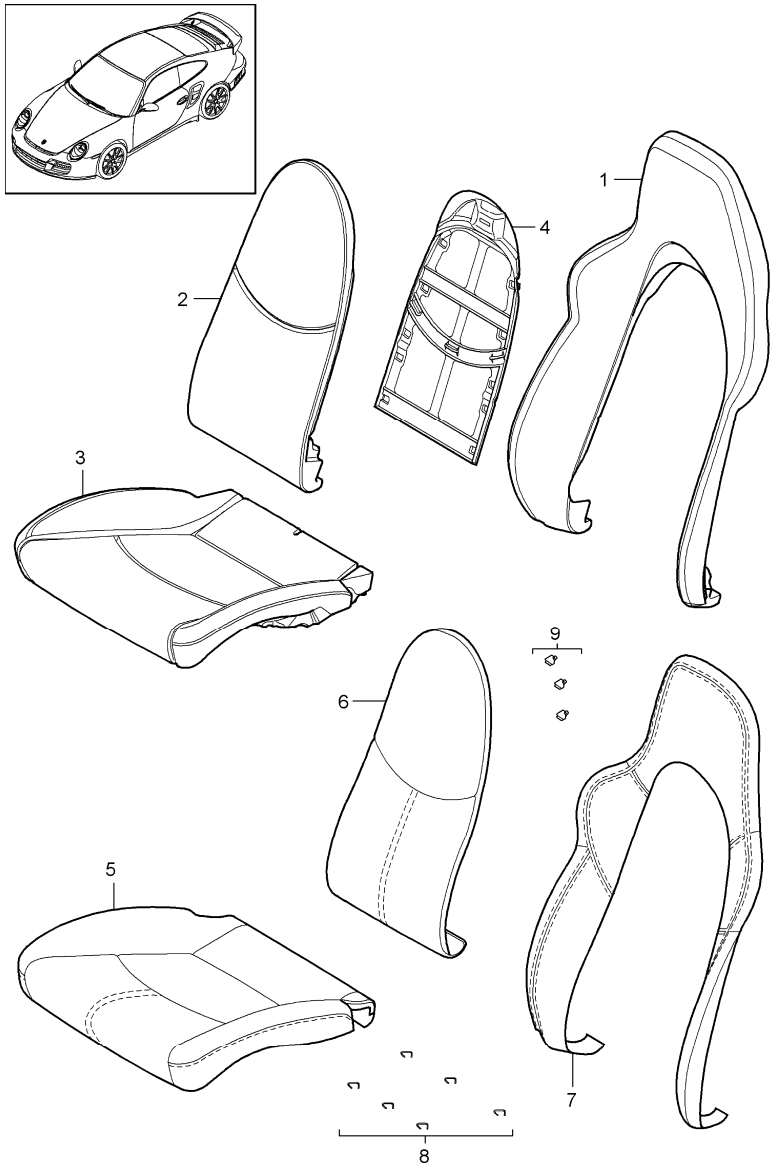

Pos	Part Number	Description	Remark	Qty	Model
		foam part cover sports seat			
1	997 521 535 01	foam part backrest outer		2	I375/376
(1)	997 521 535 02	foam part backrest outer		2	I377/378
2	997 521 581 00	foam part backrest centre part		1	I375/376/377 I378
3	997 521 571 01	foam part seat cushion with heating		1	I375/376
(3)	997 521 571 02	foam part seat cushion with heating		1	I378
(3)	997 521 571 04	foam part seat cushion with heating		1	I376/560
(3)	997 521 571 05	foam part seat cushion with heating		1	I378/560
4	997 521 551 01	cushion carrier backrest		2	I375/376/377 I378
5	997 521 161 03	cover for cushion		1	I375/376/983
	FLC	black			
	FLF	stone grey			
	FLJ	sand beige			
	FLM	sea blue			
	FLQ	terracotta			
	FLR	cocoa			
	VAA	dark grey/natural			
	VAB	brown/natural			
	VAC	carrera red			

Pos	Part Number	Description	Remark	Qty	Model
(5)	997 521 161 06	cover for cushion		1	I377/378/983
	FLC	black			
	FLF	stone grey			
	FLJ	sand beige			
	FLM	sea blue			
	FLQ	terracotta			
	FLR	cocoa			
	VAA	dark grey/natural			
	VAB	brown/natural			
	VAC	carrera red			
6	997 521 151 00	backrest cushion cover		1	I375/376/377 I378/983
		centre part			
	8YR	black			
	5X5	stone grey			
	8G1	sand beige			
	3S8	sea blue			
	9N2	terracotta			
	9Q3	cocoa			
	D11	dark grey/natural			
	T11	brown/natural			
	N11	carrera red			
(7)	997 521 155 01	backrest cover outer part		2	I377/378/983
	FLC	black			
	FLF	stone grey			
	FLJ	sand beige			
	FLM	sea blue			
	FLQ	terracotta			
	FLR	cocoa			
	VAA	dark grey/natural			
	VAB	brown/natural			
	VAC	carrera red			
(7)	997 521 941 02	backrest cover		1	IXSC/375/376 I377/378/983
		outer part			
	8YR	black			
	5X5	stone grey			
	8G1	sand beige			
	3S8	sea blue			
	9N2	terracotta			
	9Q3	cocoa			
	D11	dark grey/natural			
	T11	brown/natural			
	N11	carrera red			
8	997 521 837 00	clip padding seat		6	
9	997 521 897 00	clip backrest cover		5	

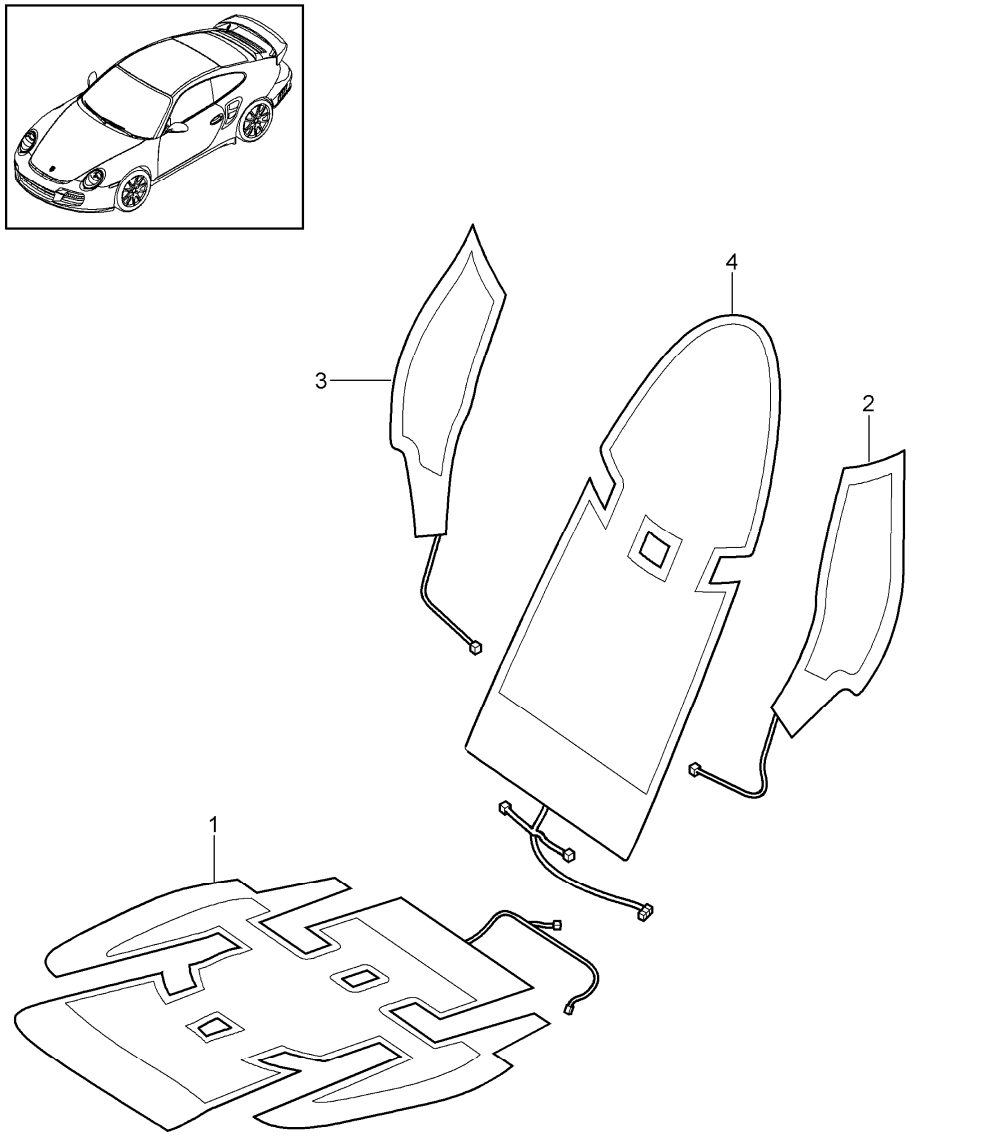

Pos	Part Number	Description	Remark	Qty	Model
		heating front seat			
1	997 653 105 02	heating element seat cushion standard seat comfort seat		2	I342/437/438
(1)	997 653 105 03	heating element seat cushion sports seat		2	I342/375/376 I377/378
(1)	997 653 117 00	heating element seat side bolster	/L	2	I541
(1)	997 653 118 00	heating element seat side bolster	/R	2	I541
2	997 653 109 00	heating element backrest side bolster standard seat comfort seat	/L	1	I342/437/438
(2)	997 653 121 00	heating element backrest side bolster standard seat comfort seat	/L	1	I541
(2)	997 653 109 01	heating element backrest side bolster sports seat	/L	1	I342/375/376 I377/378
3	997 653 110 00	heating element backrest side bolster standard seat comfort seat	/R	1	I342/437/438
(3)	997 653 122 00	heating element backrest side bolster standard seat comfort seat	/R	1	I541
(3)	997 653 110 01	heating element backrest side bolster sports seat	/R	1	I342/375/376 I377/378
4	997 653 107 00	heating element backrest cushion		2	I342

Model	Year	MG	SG	Illustration	Restrictions	UPD	20:36	06.02.2010	PORSCHE	PET	PORSCHE
997T2	2010	8	17	817-19		248	USA / CANADA				

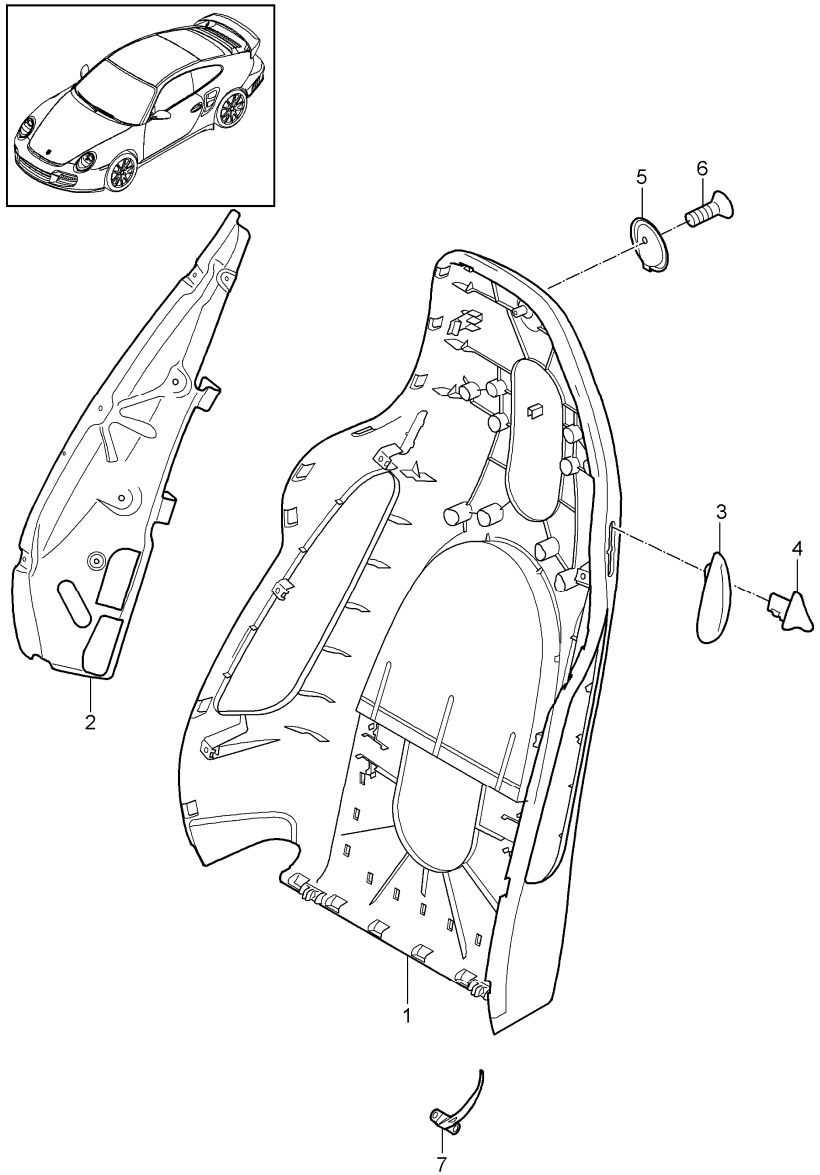

Pos	Part Number	Description	Remark	Qty	Model
		backrest shell sports seat			
1	997 521 303 13	backrest shell	/L	1	I375/377
	D07	volcano grey			
(1)	997 521 304 13	backrest shell	/R	1	I376/378
	D07	volcano grey			
(1)	997 521 981 00	backrest shell	/L	1	IXSA/375/377
	041	black			
	84A	guards red			
	12H	speed yellow			
	B9A	carrara white			
	92U	arctic silver metallic			
	C9Z	basalt black metallic			
	M7X	atlas grey metallic			
	39C	midnight blue metallic			
	M7Z	gt silver metallic			
	M7W	Meteor Grey Metallic			
	M8W	Macadamia Metallic			
	M3X	ruby red metallic			
	M5X	Dark Blue Metallic			
	22G	Racing Green Metallic			
	M5R	Aqua Blue Metallic			
	51A	creamy white			
	M2Z	Nordic Gold Metallic			
	2B5	Malachite Green Metallic			
(1)	997 521 982 00	backrest shell	/R	1	IXSA/376/378
	041	black			
	84A	guards red			
	12H	speed yellow			

Pos	Part Number	Description	Remark	Qty	Model
	B9A	carrara white			
	92U	arctic silver metallic			
	C9Z	basalt black metallic			
	M7X	atlas grey metallic			
	39C	midnight blue metallic			
	M7Z	gt silver metallic			
	M7W	Meteor Grey Metallic			
	M8W	Macadamia Metallic			
	M3X	ruby red metallic			
	M5X	Dark Blue Metallic			
	22G	Racing Green Metallic			
	M5R	Aqua Blue Metallic			
	51A	creamy white			
	M2Z	Nordic Gold Metallic			
	2B5	Malachite Green Metallic			
(1)	997 521 981 02	backrest shell leather	/L	1	IXSB/375/377
	A11	black			
	5X6	stone grey			
	8G2	sand beige			
	3S9	sea blue			
	9S5	terracotta			
	9V6	cocoa			
	D12	dark grey/natural			
	T12	brown/natural			
	N12	carrera red			
(1)	997 521 982 02	backrest shell leather	/R	1	IXSB/376/378
	A11	black			
	5X6	stone grey			
	8G2	sand beige			
	3S9	sea blue			
	T12	brown/natural			
	N12	carrera red			
2	997 521 319 00	bracket backrest side bolster	/L	1	
(2)	997 521 320 00	bracket backrest side bolster	/R	1	
3	997 521 621 03	rosette backrest locking lever	/L	1	I375/376/377 I378
	D07	volcano grey			
(3)	997 521 622 03	rosette backrest locking lever	/R	1	I375/376/377 I378
	D07	volcano grey			
4	997 521 623 02	control button backrest locking lever	/L	1	I375/376/377 I378
	V05	galvano silver			
(4)	997 521 624 02	control button backrest locking lever	/R	1	I375/376/377 I378
	V05	galvano silver			
5	997 521 373 01	coat hook		2	I375/376/377 I378
	D07	volcano grey			
6	999 919 232 09	screw M5 X 20 coat hook		1	I375/376/377 I378
7	997 521 783 00	support panel backrest shell	/L	1	I375/376/377 I378

Pos	Part Number	Description	Remark	Qty	Model
(7)	997 521 784 00	support panel backrest shell	/R	1	I375/376/377 I378

Model	Year	MG	SG	Illustration	Restrictions	UPD	20:36	06.02.2010	PORSCHE	PET	PORSCHE
997T2	2010	8	17	817-21		248	USA / CANADA				

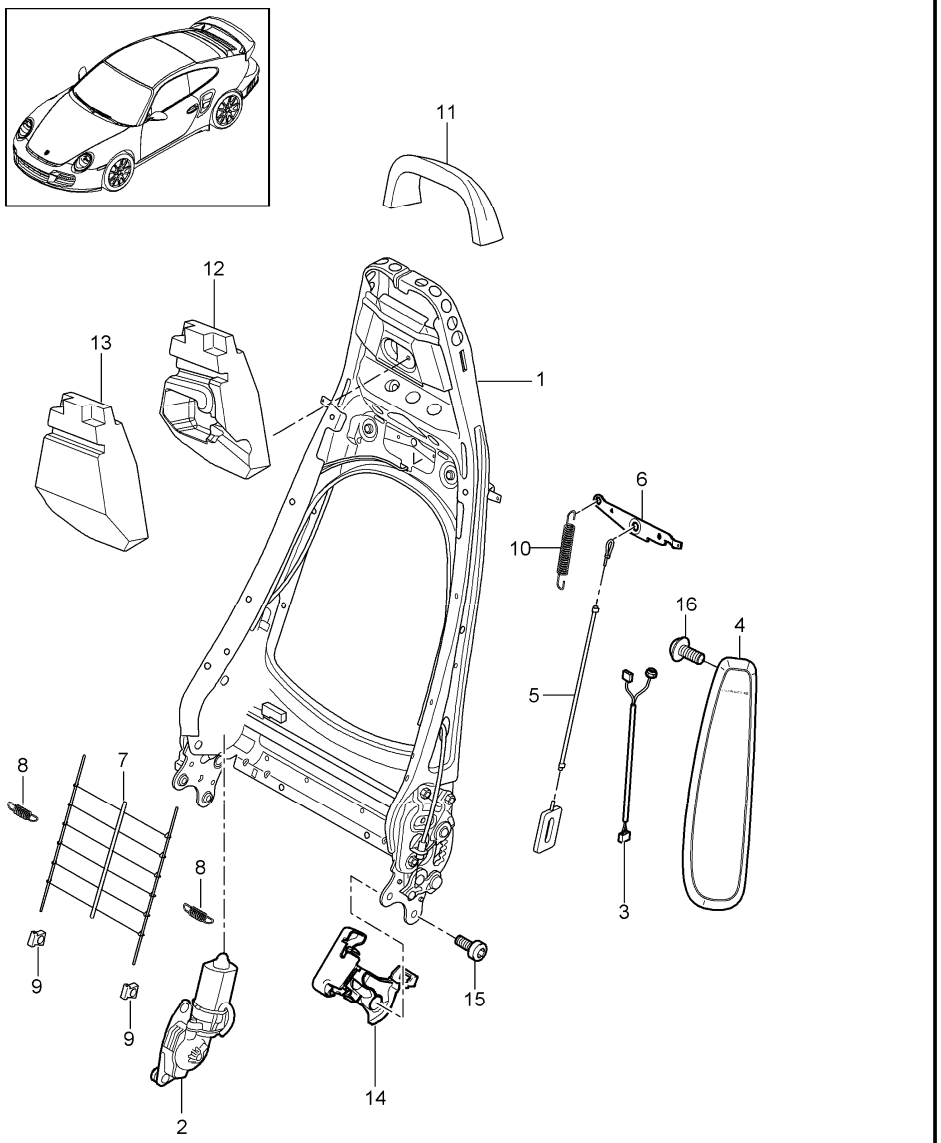

Pos	Part Number	Description	Remark	Qty	Model
		backrest frame sports seat			
1	997 521 329 02	backrest frame without memory		1	I375/376/377 I378
(1)	997 521 329 03	backrest frame with memory		1	I537/538
2	997 624 331 00	electric motor backrest with memory		1	I537/538
(2)	997 624 321 00	electric motor backrest without memory		1	I375/376/377 I378
3	997 612 785 01	wiring harness side airbag	/L	1	I537
(3)	997 612 786 01	wiring harness side airbag	/R	1	I538
(3)	997 612 685 01	wiring harness side airbag without memory	/L	1	I375/377
3	997 612 686 01	wiring harness side airbag without memory	/R	1	I376/378
4	997 803 081 02	side airbag	/L	1	I375/377/388
	D07	volcano grey			
(4)	997 803 082 02	side airbag	/R	1	I376/378/389
	D07	volcano grey			
(4)	997 803 981 00	side airbag	/L	1	IXSA/XSB/375 I377
	A03	black			
	5V7	stone grey			
	5Z1	sand beige			
	8W7	sea blue			

Pos	Part Number	Description	Remark	Qty	Model
	8X8	terracotta			
	8P9	cocoa			
	T13	brown/natural			
	N23	carrera red			
(4)	997 803 982 00	side airbag	/R	1	IXSA/XSB/376 I378
	A03	black			
	5V7	stone grey			
	5Z1	sand beige			
	8W7	sea blue			
	8X8	terracotta			
	8P9	cocoa			
	T13	brown/natural			
	N23	carrera red			
5	997 521 485 00	bowden cable		2	I375/376/377 I378
		backrest frame			
6	997 521 375 00	release		1	I375/376/377 I378
		backrest frame			
7	997 521 855 00	grille		1	I375/376/377 I378
		backrest frame			
8	997 521 893 00	tension spring		2	I375/376/377 I378
		inner spring			
9	997 521 895 00	clip		2	I375/376/377 I378
		inner spring			
10	997 521 797 00	tension spring		1	I375/376/377 I378
		release backrest			
11	997 521 885 00	foam part		1	I375/376/377 I378
		head rest upper			
12	997 521 887 01	foam part head rest centre electric		1	I377/378
13	997 521 887 00	foam part head rest centre		1	I375/376
14	997 521 335 01	cover	/L	1	I375/376/377 I378
		mounting component inner			
	D07	volcano grey			
(14)	997 521 336 01	cover	/R	1	I375/376/377 I378
		mounting component inner			
	D07	volcano grey			
15	999 073 375 09	screw mount backrest seat adjuster		4	
16	999 073 306 09	screw mount side airbag		2	

Model	Year	MG	SG	Illustration	Restrictions	UPD	20:36	06.02.2010	PORSCHE	PET	PORSCHE
997T2	2010	8	17	817-22		248	USA / CANADA				

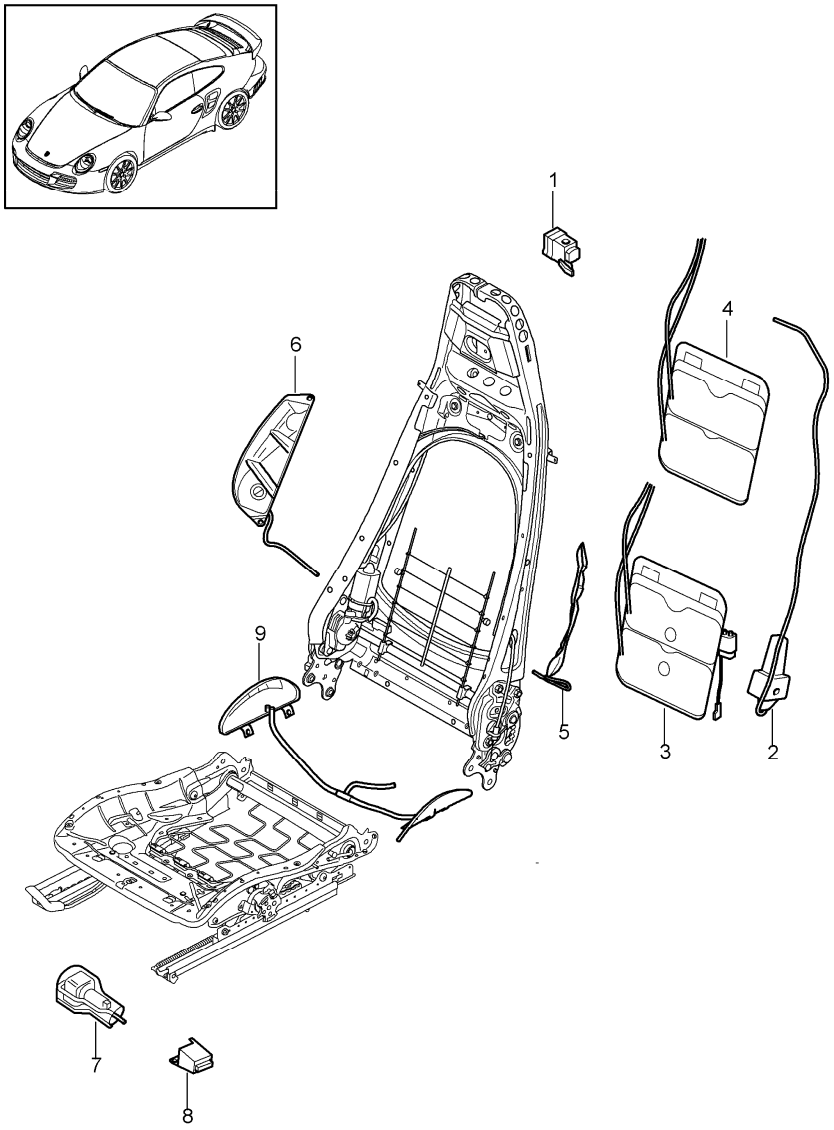

Pos	Part Number	Description	Remark	Qty	Model
		lumbar support Seat width adjustment seat adjuster			
1	997 617 725 00	valve lumbar support without memory		1	I377/378/437 I438
(1)	997 617 726 00	valve lumbar support memory		1	I537/538
2	997 620 725 00	compressor lumbar		1	I377/378/437 I438 I437/438
3	997 521 709 01	lumbar support airbag with memory		1	I377/378/437 I438/537/538
(3)	997 521 709 03	lumbar support airbag with memory		1	I437/438/537 I538/541
4	997 521 709 00	lumbar support airbag without memory		1	I377/378
(4)	997 521 709 02	lumbar support airbag without memory		1	I437/438/541
5	997 521 711 00	container air distributor backrest side bolster	/L	1	I377/378
6	997 521 712 00	container air distributor backrest side bolster	/R	1	I377/378
7	997 620 727 00	compressor adjustment seat side bolster		1	I377/378
8	997 617 727 00	valve adjustment seat wide		1	I377/378

Pos	Part Number	Description	Remark	Qty	Model
9	997 521 713 01	container air distributor seat side bolster		1	I377/378

Pos	Part Number	Description	Remark	Qty	Model

Model	Year	MG	SG	Illustration	Restrictions	UPD	20:36	06.02.2010	PORSCHE	PET	PORSCHE
997T2	2010	8	17	817-23		248	USA / CANADA				

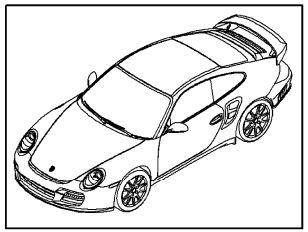

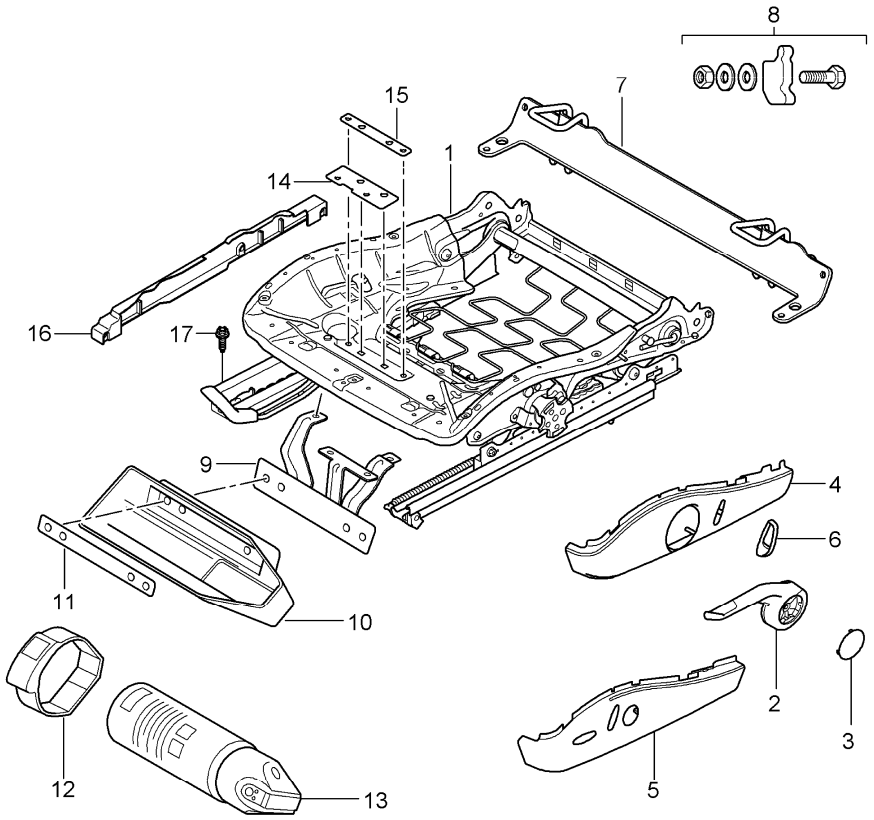

Pos	Part Number	Description	Remark	Qty	Model
		seat adjuster sports seat			
1	997 521 201 10	seat adjuster manually driver's side	/LL/L	1	I098/375
(1)	997 521 201 10	seat adjuster manually driver's side	/L	1	I375/480/553
(1)	997 521 201 18	seat adjuster manually driver's side	/L	1	I250/375/553
(1)	997 521 202 23	seat adjuster manually driver's side	/RL/R	1	I376/560
(1)	997 521 201 24	seat adjuster electric without memory driver's side	/L	1	I377
(1)	997 521 201 24	seat adjuster electric without memory driver's side	/L	1	I377/480/553
(1)	997 521 201 26	seat adjuster electric without memory driver's side	/L	1	I377/541
(1)	997 521 201 26	seat adjuster electric without memory driver's side	/L	1	I377/480/541 I553
(1)	997 521 201 28	seat adjuster electric without memory driver's side	/L	1	I250/377/553
(1)	997 521 202 30	seat adjuster electric without memory driver's side	/R	1	I378

Pos	Part Number	Description	Remark	Qty	Model
(1)	997 521 202 24	seat adjuster electric without memory driver's side	/R	1	I378/560
(1)	997 521 201 25	seat adjuster electric memory driver's side	/L	1	I377/537
(1)	997 521 201 25	seat adjuster electric memory driver's side	/L	1	I377/480/537 I553
(1)	997 521 201 27	seat adjuster electric memory driver's side	/L	1	I377/537/541
(1)	997 521 201 27	seat adjuster electric memory driver's side	/L	1	I377/480/537 I541/553
(1)	997 521 201 29	seat adjuster electric memory driver's side	/L	1	I250/377/537 I553
(1)	997 521 201 30	seat adjuster electric memory driver's side	/L	1	I250/377/537 I541/553
(1)	997 521 202 31	seat adjuster electric memory driver's side	/R	1	I378/538
(1)	997 521 202 20	seat adjuster manually passenger's side	/LL/R	1	I098/376
2	997 521 627 01	actuating lever height adjustment	/L	1	I375
	V05	galvano silver			
(2)	997 521 628 01	actuating lever height adjustment	/R	1	I376

Pos	Part Number	Description	Remark	Qty	Model
	V05	galvano silver			
3	997 521 629 01	cap height adjustment		2	I375/376
	D07	volcano grey			
4	997 521 325 06	trim for switch	/L	1	I375
	D07	volcano grey			
(4)	997 521 326 06	trim for switch	/R	1	I376
	D07	volcano grey			
(4)	997 521 326 09	trim for switch	/R	1	I376/560
	D07	volcano grey			
5	997 521 325 08	trim for switch	/L	1	I377
	D07	volcano grey			
(5)	997 521 326 08	trim for switch	/R	1	I378
	D07	volcano grey			
(5)	997 521 326 11	trim for switch		1	I378/560
	D07	volcano grey			
6	997 521 631 01	control button backrest		1	I375/376/377 I378
	V05	galvano silver			
7	997 521 061 01	retaining bow child car seat retaining bow not for AUSTRALIEN		1	
8	997 521 961 01	set of fastening parts retaining bow		1	
9	997 521 251 00	support fire extinguisher		1	I098/509
10	7PP 882 650	cup fire extinguisher		1	I509
11	7PP 882 649	support cup fire extinguisher		1	I509

Pos	Part Number	Description	Remark	Qty	Model
12	997 521 851 00	restraining strap fire extinguisher		1	I509
13	996 722 115 00	fire extinguisher Information available Information available		1	I509
14	997 521 841 00	reinforcement front		1	I509
15	997 521 843 00	reinforcement rear		1	I509
16	997 521 427 01	cover sensor weight	/L	1	I376/378/560
	01C	satin black			
(16)	997 521 426 01	cover sensor weight	/R	1	I376/378/560
	01C	satin black			
17	999 141 047 01	torx screw seat rail mount		4	

Pos	Part Number	Description	Remark	Qty	Model

Model	Year	MG	SG	Illustration	Restrictions	UPD	20:37	06.02.2010	PET
997T2	2010	8	17	817-24		248	USA / CANADA		

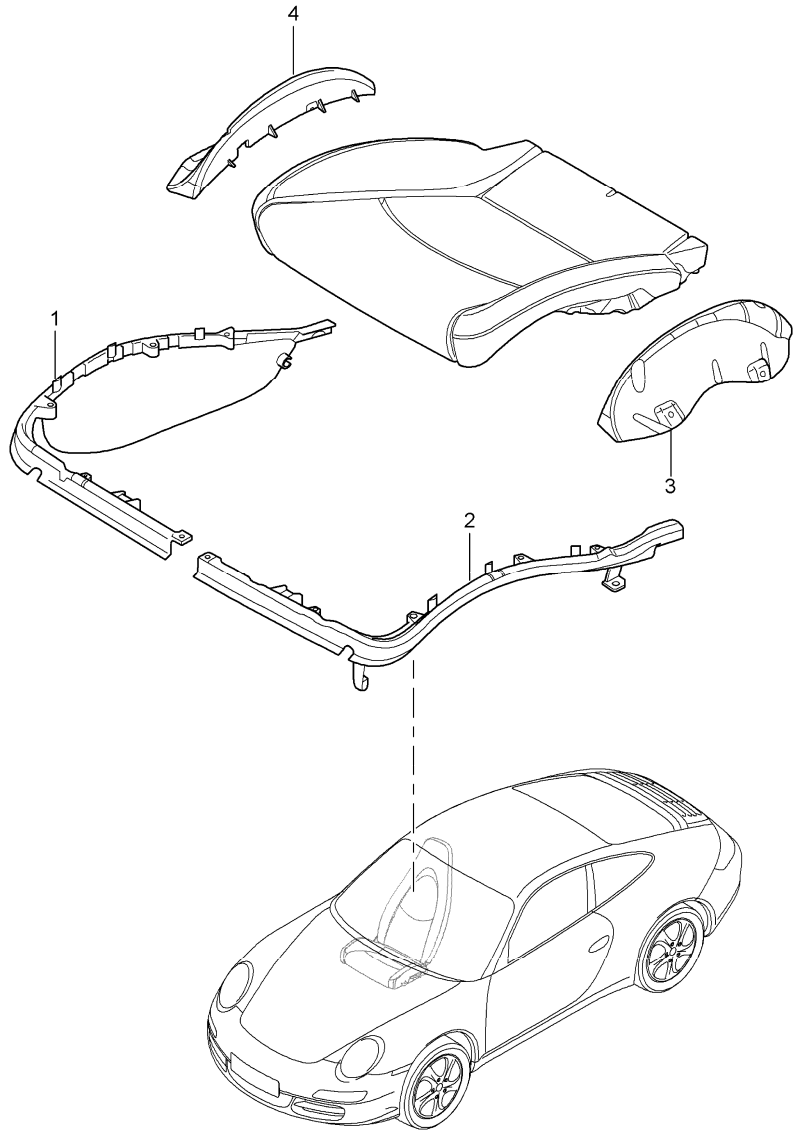

Pos	Part Number	Description	Remark	Qty	Model
		cushion carrier frame seat surface sports seat			
1	997 521 547 00	frame inner	/L	1	I376/378
(1)	997 521 548 00	frame inner	/R	1	I375/377
2	997 521 545 00	frame outer	/L	1	I375/377
(2)	997 521 546 00	frame outer	/R	1	I376/378
(2)	997 521 546 01	frame outer	/R	1	I376/378/560
3	997 521 519 00	supporting plate seat cushion	/L	1	I377/378
4	997 521 520 00	supporting plate seat cushion	/R	1	I377/378

Model	Year	MG	SG	Illustration	Restrictions	UPD	20:37	06.02.2010
997T2	2010	8	17	817-25		248	USA / CANADA	

PORSCHE PET PORSCHE

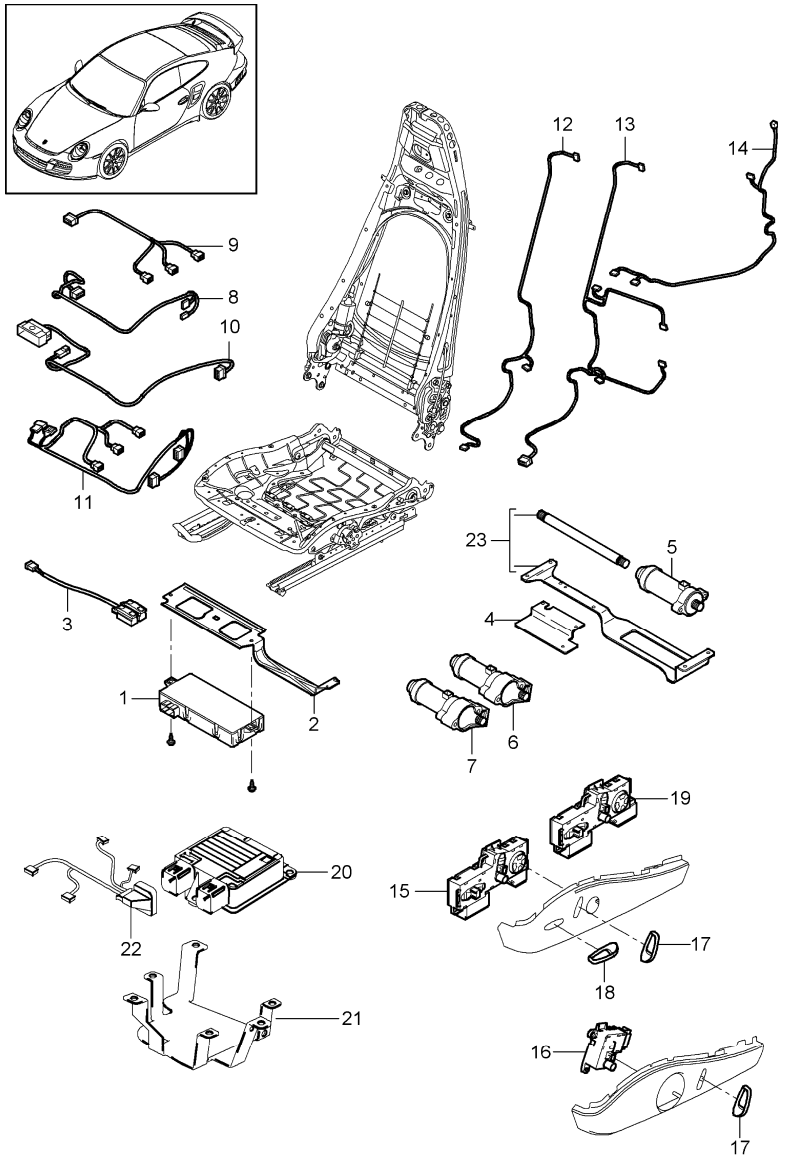

Pos	Part Number	Description	Remark	Qty	Model
		wiring harnesses switch control unit electric motor sports seat			
1	997 618 537 07	control unit seating position control		1	I537/538
2	997 521 643 01	support control unit seating position control		1	I537/538
3	997 613 725 00	switch seat adjuster		1	I377
	V05	galvano silver			
(3)	997 613 726 00	switch seat adjuster		1	I378
	V05	galvano silver			
4	997 521 343 00	support electric motor		1	I377/378
5	997 624 322 00	electric motor seat adjuster lengthways without memory		1	I377/378
(5)	997 624 332 00	electric motor seat adjuster lengthways with memory		1	I537/538
6	997 624 322 00	electric motor seat adjuster height adjustment without memory		1	I377/378
(6)	997 624 332 00	electric motor seat adjuster height adjustment with memory		1	I537/538
7	997 624 323 00	electric motor seat adjuster tilt angle without memory		1	I377/378

Pos	Part Number	Description	Remark	Qty	Model
(7)	997 624 333 00	electric motor seat adjuster tilt angle with memory		1	I537/538
8	997 612 684 00	wiring harness switch seat adjuster memory		1	I537/538
9	997 612 690 00	wiring harness lengthways height adjustment memory		1	I537/538
10	997 612 682 01	wiring harness switch seat adjuster		1	I375/376
11	997 612 691 02	wiring harness switch without memory		1	I377/378
12	997 612 689 00	wiring harness lumbar support without memory		1	I377/378
13	997 612 692 01	wiring harness backrest lumbar with memory		1	I377/378/537 I538
14	997 612 685 01	wiring harness backrest without memory	/L	1	I375/377
(14)	997 612 686 01	wiring harness backrest without memory	/R	1	I376/378
15	997 613 721 01	switch seat adjuster memory switch	/L	1	I377/537
	V05	galvano silver			
(15)	997 613 722 01	switch seat adjuster memory switch	/R	1	I378/538

Pos	Part Number	Description	Remark	Qty	Model
	V05	galvano silver			
16	997 613 713 00	switch	/L	1	I375
(16)	997 613 714 00	switch seat adjuster manually adjustable	/R	1	I376
17	997 521 631 01	control button backrest		1	I375/376/377 I378
	V05	galvano silver			
18	997 521 633 02	control button seat cushion		1	I377/378
	V05	galvano silver			
19	997 613 717 01	switch seat adjuster without memory	/L	1	I377
	V05	galvano silver			
(19)	997 613 718 01	switch seat adjuster without memory	/R	1	I378
	V05	galvano silver			
(20)	997 618 233 05	control unit seat occupancy detection		1	I376/378/389 I560
(21)	997 521 646 00	support control unit seat occupancy detection		1	I376/378/560
22	997 612 688 01	wiring harness seat occupancy detection		1	I376/378/560
(23)	997 521 901 00	repair kit pliable shaft engine bracket		1	
-	999 650 973 40	clip mount wiring harness seat occupancy detection		1	

Model	Year	MG	SG	Illustration	Restrictions	UPD	20:37	06.02.2010	PORSCHE	PET	PORSCHE
997T2	2010	8	17	817-40		248	USA / CANADA				

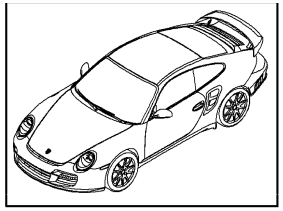

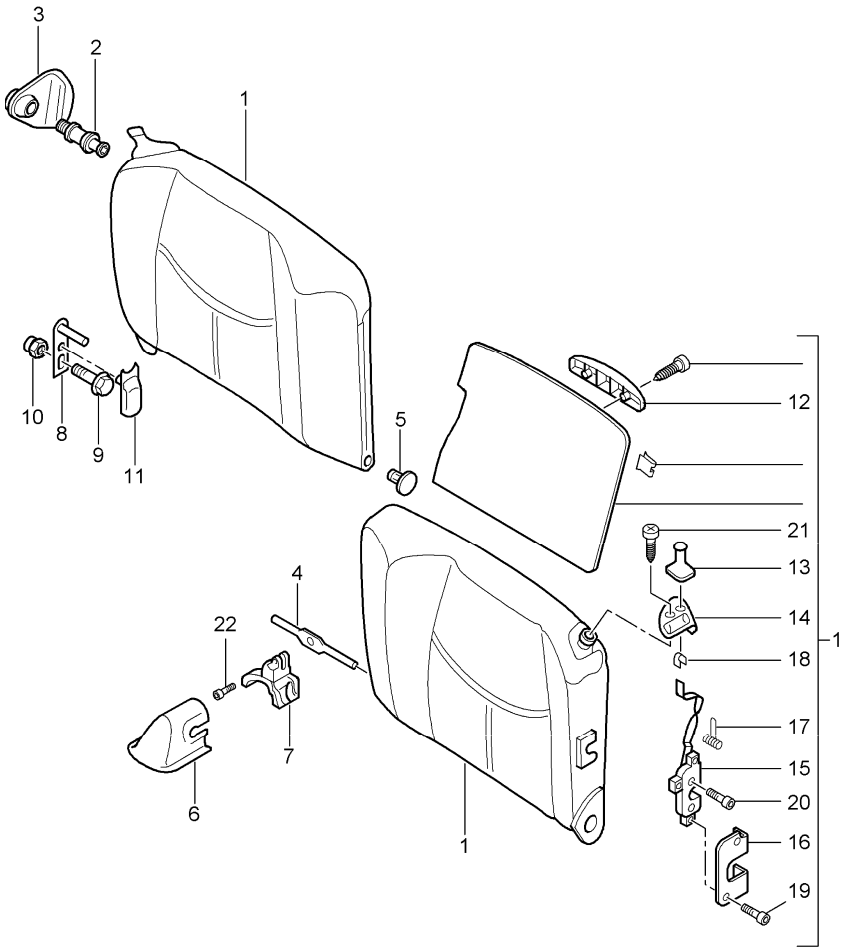

Pos	Part Number	Description	Remark	Qty	Model
		back seat backrest accessories			Coupe
1	997 522 011 07	back seat backrest	/L	1	I685/936
	8YR	black			
	5X5	stone grey			
	8G1	sand beige			
	3S8	sea blue			
	9N2	terracotta			
	9Q3	cocoa			
	D11	dark grey/natural			
	T11	brown/natural			
	N11	carrera red			
(1)	997 522 012 07	back seat backrest	/R	1	I507/685/936
	8YR	black			
	5X5	stone grey			
	8G1	sand beige			
	3S8	sea blue			
	9N2	terracotta			
	9Q3	cocoa			
	D11	dark grey/natural			
	T11	brown/natural			
	N11	carrera red			
(1)	997 522 011 08	back seat backrest	/L	1	I507/685/939
	8YR	black			
	5X5	stone grey			
	8G1	sand beige			
	3S8	sea blue			
	9N2	terracotta			
	9Q3	cocoa			

Pos	Part Number	Description	Remark	Qty	Model
	D11	dark grey/natural			
	T11	brown/natural			
	N11	carrera red			
(1)	997 522 012 08	back seat backrest	/R	1	I507/685/939
	8YR	black			
	5X5	stone grey			
	8G1	sand beige			
	3S8	sea blue			
	9N2	terracotta			
	9Q3	cocoa			
	D11	dark grey/natural			
	T11	brown/natural			
	N11	carrera red			
2	996 522 267 06	bolt locking device		2	I685
3	997 522 095 01	stop	/L	1	I685
	01C	satin black			
(3)	997 522 096 01	stop	/R	1	I685
	01C	satin black			
4	997 522 615 01	bearing shaft		1	I685
-	999 073 436 01	combination screw bearing shaft		1	I685
5	996 522 571 00	protection washer		1	I685
	01C	satin black			
6	996 522 431 02	cover		1	I685
	01C	satin black			
7	996 522 333 00	bracket		1	I685
8	997 522 211 00	bearing outer		2	I685
9	999 073 138 01	screw M 8 X 25		2	I685
10	996 522 271 00	bush		2	I685
11	996 522 425 01	cover		1	I685
	01C	satin black			
12	996 522 421 00	stop backrest		2	I685
	01C	satin black			
13	997 522 321 00	actuating lever backrest	/L	1	I685
	01C	satin black			
(13)	997 522 322 00	actuating lever backrest	/R	1	I685
	01C	satin black			
14	996 522 315 00	rosette control button	/L	1	I685
	01C	satin black			
(14)	996 522 316 00	rosette control button	/R	1	I685
	01C	satin black			
15	996 522 281 02	lock backrest	/L	1	I685
(15)	996 522 282 02	lock backrest	/R	1	I685
16	997 522 771 00	trim cover lock	/L	1	I685
	01C	satin black			
(16)	997 522 772 00	trim cover lock	/R	1	I685
	01C	satin black			
17	996 522 653 00	spring lock		2	I685
18	999 507 630 01	clamp control button		2	I685
19	999 073 049 02	tapping screw ST 3,5 X 16		4	I685

Pos	Part Number	Description	Remark	Qty	Model
20	900 269 028 03	countersunk-head screw M 8 X 30		4	I685
21	900 145 041 07	tapping screw B 3,5 X 16		4	I685
22	999 073 436 01	combination screw M 5 X 16		1	I685

Pos	Part Number	Description	Remark	Qty	Model

Model	Year	MG	SG	Illustration	Restrictions	UPD	20:37	06.02.2010	PORSCHE	PET	PORSCHE
997T2	2010	8	17	817-44		248	USA / CANADA				

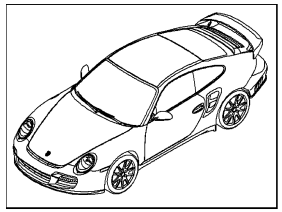

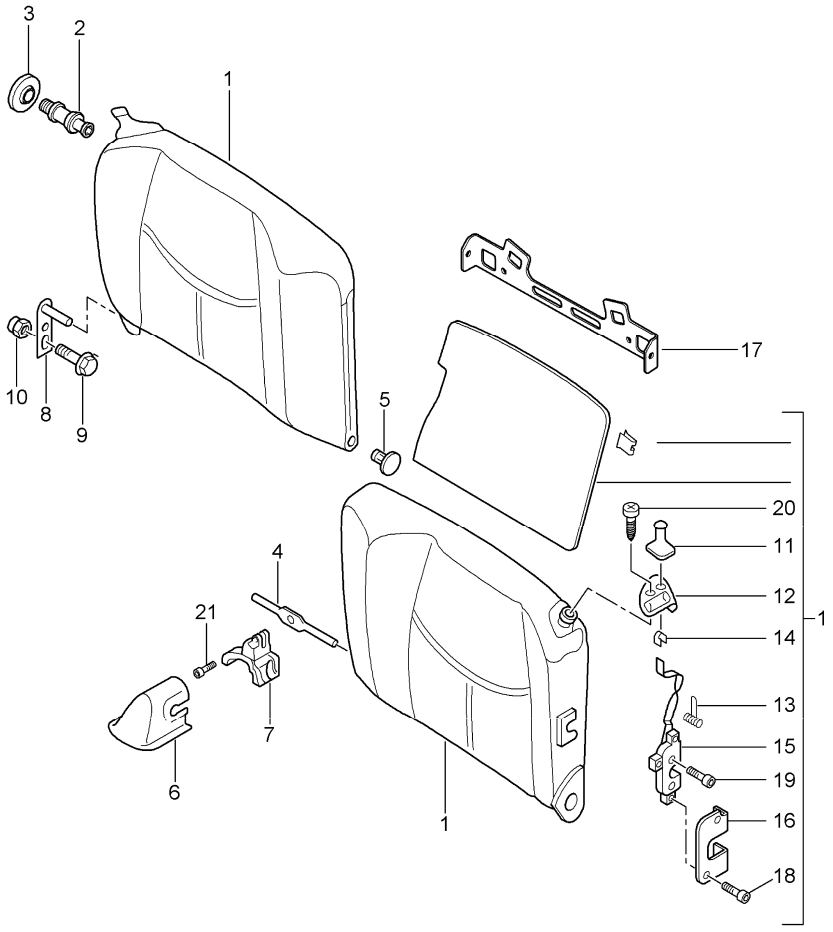

Pos	Part Number	Description	Remark	Qty	Model
		back seat backrest accessories	09-		Cabrio
1	997 522 011 10	back seat backrest	/L	1	I507/685/936
	8YR	black			
	5X5	stone grey			
	8G1	sand beige			
	3S8	sea blue			
	9N2	terracotta			
	9Q3	cocoa			
	D11	dark grey/natural			
	T11	brown/natural			
	N11	carrera red			
(1)	997 522 012 10	back seat backrest	/R	1	I507/685/936
	8YR	black			
	5X5	stone grey			
	8G1	sand beige			
	3S8	sea blue			
	9N2	terracotta			
	9Q3	cocoa			
	D11	dark grey/natural			
	T11	brown/natural			
	N11	carrera red			
(1)	997 522 011 11	back seat backrest	/L	1	I507/685/939
	8YR	black			
	5X5	stone grey			
	8G1	sand beige			
	3S8	sea blue			
	9N2	terracotta			
	9Q3	cocoa			

Pos	Part Number	Description	Remark	Qty	Model
	D11	dark grey/natural			
	T11	brown/natural			
	N11	carrera red			
(1)	997 522 012 11	back seat backrest	/R	1	I507/685/939
	8YR	black			
	5X5	stone grey			
	8G1	sand beige			
	3S8	sea blue			
	9N2	terracotta			
	9Q3	cocoa			
	D11	dark grey/natural			
	T11	brown/natural			
	N11	carrera red			
2	996 522 267 07	bolt locking device		2	I685
3	996 522 097 08	rosette		2	I685
	01C	satin black			
4	997 522 615 01	bearing shaft		1	I685
-	999 073 436 01	combination screw bearing shaft		1	I685
5	996 522 571 00	protection washer		1	I685
	01C	satin black			
6	996 522 431 02	cover		1	I685
	01C	satin black			
7	996 522 041 00	bearing		1	
8	997 522 211 00	bearing outer		2	I685
9	999 073 138 01	screw M 8 X 25		2	I685
10	996 522 271 00	bush		2	I685
11	997 522 321 00	actuating lever	/L	1	I685
	01C	satin black			
(11)	997 522 322 00	actuating lever	/R	1	I685
	01C	satin black			
12	996 522 315 00	rosette	/L	1	I685
	01C	satin black			
(12)	996 522 316 00	rosette	/R	1	I685
	01C	satin black			
13	996 522 653 00	spring lock		2	I685
14	999 507 630 01	clamp control button		2	I685
15	996 522 281 02	lock backrest	/L	1	I685
(15)	996 522 282 02	lock backrest	/R	1	I685
16	997 522 771 00	trim cover	/L	1	I685
	01C	satin black			
(16)	997 522 772 00	trim cover	/R	1	I685
	01C	satin black			
17	997 803 721 00	support child car seat filler plate back seat backrest		1	I335/479
18	999 073 049 02	tapping screw ST 4,3 X 16		4	I685
19	900 269 028 03	countersunk-head screw M 8 X 30		4	I685
20	900 145 041 07	tapping screw B 3,5 X 16		4	I685
21	999 073 436 01	combination screw M 5 X 16		1	I685

Model	Year	MG	SG	Illustration	Restrictions	UPD	20:38	06.02.2010	PORSCHE PET PORSCHE
997T2	2010	8	17	817-50		248	USA / CANADA		

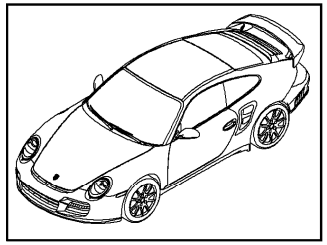

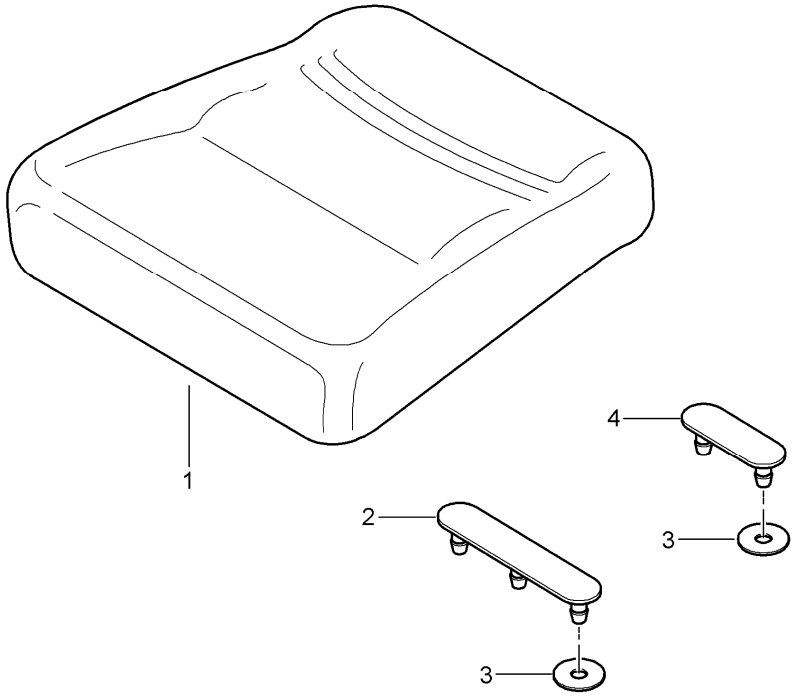

Pos	Part Number	Description	Remark	Qty	Model
		back seat cushion			Coupe
1	997 522 051 01	back seat cushion	/L	1	I507/685/936
	8YR	black			
	5X5	stone grey			
	8G1	sand beige			
	3S8	sea blue			
	9N2	terracotta			
	9Q3	cocoa			
	D11	dark grey/natural			
	T11	brown/natural			
	N11	carrera red			
(1)	997 522 052 01	back seat cushion	/R	1	I507/685/936
	8YR	black			
	5X5	stone grey			
	8G1	sand beige			
	3S8	sea blue			
	9N2	terracotta			
	9Q3	cocoa			
	D11	dark grey/natural			
	T11	brown/natural			
	N11	carrera red			
(1)	997 522 051 02	back seat cushion	/L	1	I507/685/939
	8YR	black			
	5X5	stone grey			
	8G1	sand beige			
	3S8	sea blue			
	9N2	terracotta			
	9Q3	cocoa			
	D11	dark grey/natural			

Pos	Part Number	Description	Remark	Qty	Model
	T11	brown/natural			
	N11	carrera red			
(1)	997 522 052 02	back seat cushion	/R	1	I507/685/939
	8YR	black			
	5X5	stone grey			
	8G1	sand beige			
	3S8	sea blue			
	9N2	terracotta			
	9Q3	cocoa			
	D11	dark grey/natural			
	T11	brown/natural			
	N11	carrera red			
2	997 551 893 01	clip triple		X	I685
3	997 551 897 01	lock washer		X	I685
4	997 551 895 01	clip double		X	I685

Pos	Part Number	Description	Remark	Qty	Model

Model	Year	MG	SG	Illustration	Restrictions	UPD	20:38	06.02.2010	PORSCHE	PET	PORSCHE
997T2	2010	8	17	817-54		248	USA / CANADA				

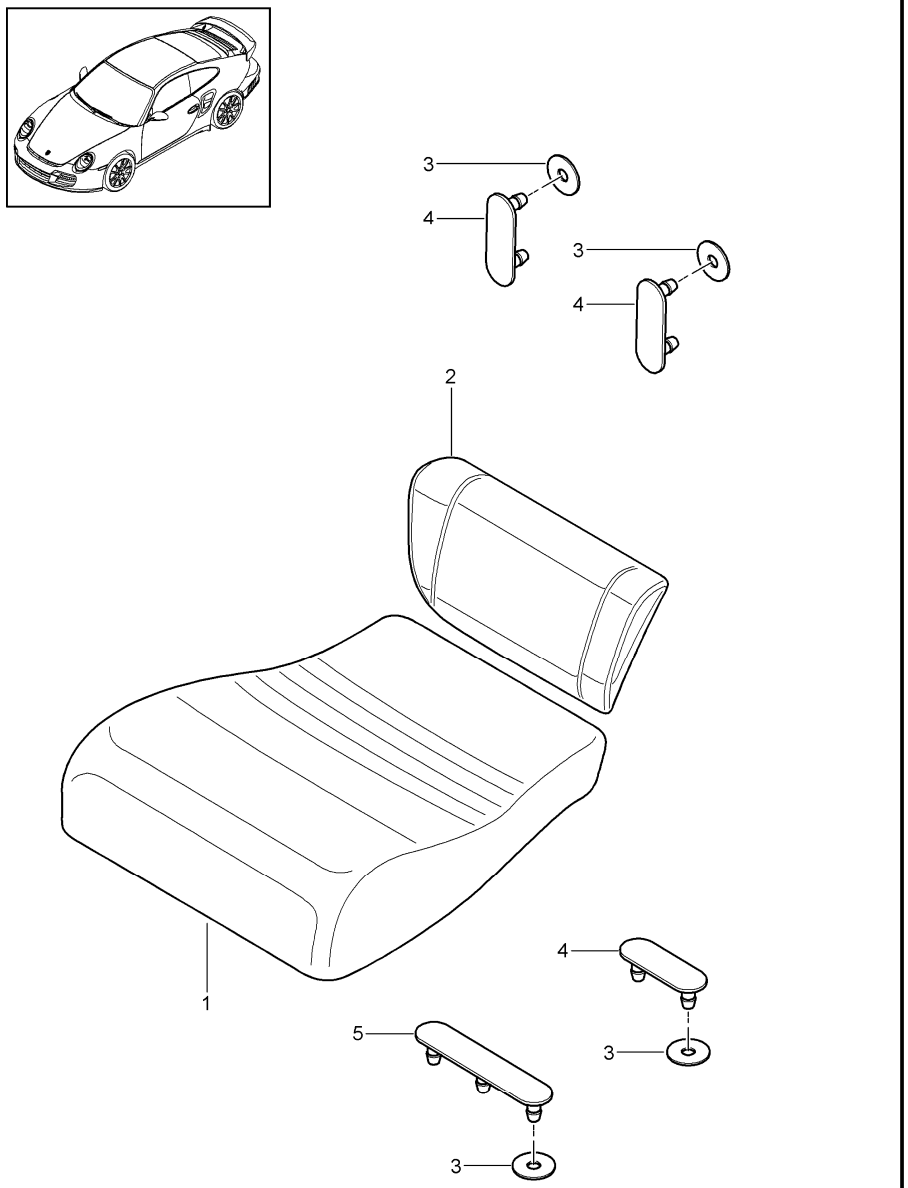

Pos	Part Number	Description	Remark	Qty	Model
		back seat cushion			Cabrio
1	997 522 051 10	back seat cushion	/L	1	I507/685/936
	8YR	black			
	5X5	stone grey			
	8G1	sand beige			
	3S8	sea blue			
	9N2	terracotta			
	9Q3	cocoa			
	D11	dark grey/natural			
	T11	brown/natural			
	N11	carrera red			
(1)	997 522 052 10	back seat cushion	/R	1	I507/685/936
	8YR	black			
	5X5	stone grey			
	8G1	sand beige			
	3S8	sea blue			
	9N2	terracotta			
	9Q3	cocoa			
	D11	dark grey/natural			
	T11	brown/natural			
	N11	carrera red			
(1)	997 522 051 11	back seat cushion	/L	1	I507/685/939
	8YR	black			
	5X5	stone grey			
	8G1	sand beige			
	3S8	sea blue			
	9N2	terracotta			
	9Q3	cocoa			
	D11	dark grey/natural			

Pos	Part Number	Description	Remark	Qty	Model
	T11	brown/natural			
	N11	carrera red	08-		
(1)	997 522 052 11	back seat cushion	/R	1	I507/685/939
	8YR	black			
	5X5	stone grey			
	8G1	sand beige			
	3S8	sea blue			
	9N2	terracotta			
	9Q3	cocoa			
	D11	dark grey/natural			
	T11	brown/natural			
	N11	carrera red	08-		
2	997 522 235 01	centre part back seat backrest	/L	1	I507/685/936
	8YR	black			
	5X5	stone grey			
	8G1	sand beige			
	3S8	sea blue			
	9N2	terracotta			
	9Q3	cocoa			
	D11	dark grey/natural			
	T11	brown/natural			
	N11	carrera red			
(2)	997 522 236 01	centre part back seat backrest	/R	1	I507/685/936
	8YR	black			
	5X5	stone grey			
	8G1	sand beige			
	3S8	sea blue			
	9N2	terracotta			
	9Q3	cocoa			
	D11	dark grey/natural			
	T11	brown/natural			
	N11	carrera red			
(2)	997 522 235 02	centre part back seat backrest	/L	1	I507/685/939
	8YR	black			
	5X5	stone grey			
	8G1	sand beige			
	3S8	sea blue			
	9N2	terracotta			
	9Q3	cocoa			
	D11	dark grey/natural			
	T11	brown/natural			
	N11	carrera red			
(2)	997 522 236 02	centre part back seat backrest	/R	1	I507/685/939
	8YR	black			
	5X5	stone grey			
	8G1	sand beige			
	3S8	sea blue			
	9N2	terracotta			
	9Q3	cocoa			
	D11	dark grey/natural			
	T11	brown/natural			
	N11	carrera red			
(3)	997 551 897 01	lock washer		X	I685
4	997 551 895 01	clip double		X	
5	997 551 893 01	clip triple		X	I685

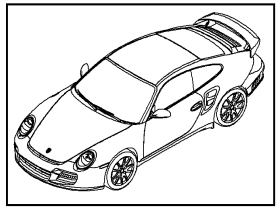

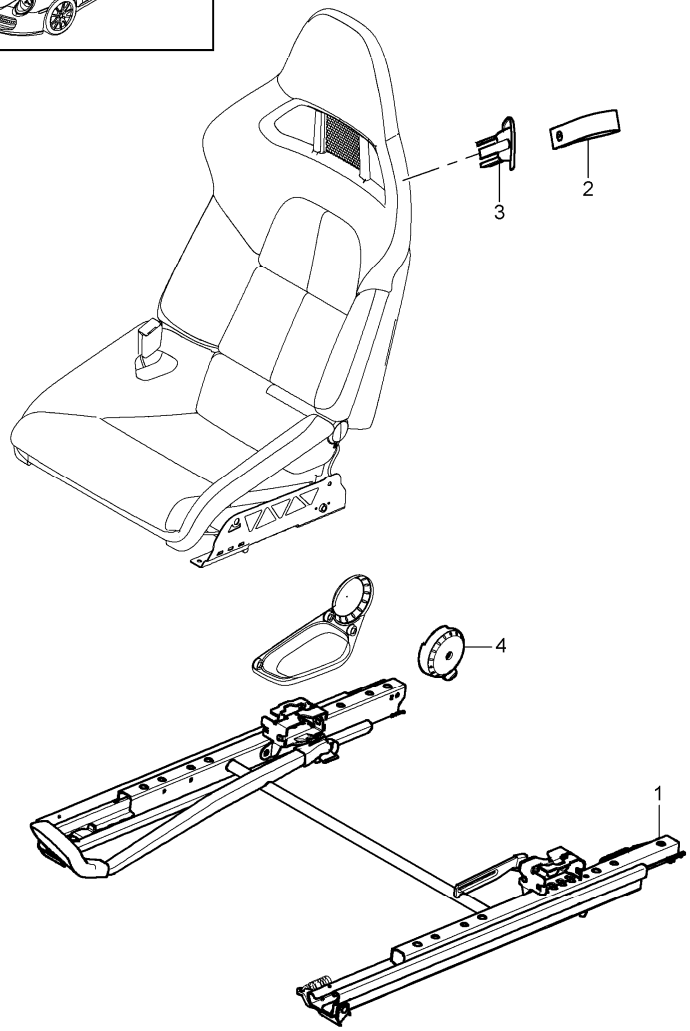

Pos	Part Number	Description	Remark	Qty	Model
		bucket seat collapsible complete not available			COUPE CABRIO
2	997 521 539 00	traction noose backrest frame	/L	1	I388
	A80	black			
(2)	997 521 540 00	traction noose backrest frame	/R	1	I389
	A80	black			
3	997 521 538 00	rosette traction noose backrest frame	/R	1	I389
	01C	satin black			
(3)	997 521 537 00	rosette traction noose backrest frame	/L	1	I388
	01C	satin black			
4	997 521 563 00	cover hinge inner	/L	1	I388/389
	01C	satin black			
(4)	997 521 564 00	cover hinge inner	/R	1	I388/389
	01C	satin black			

Model	Year	MG	SG	Illustration	Restrictions	UPD	20:39	06.02.2010
997T2	2010	8	17	817-62		248	USA / CANADA	

PORSCHE PET PORSCHE

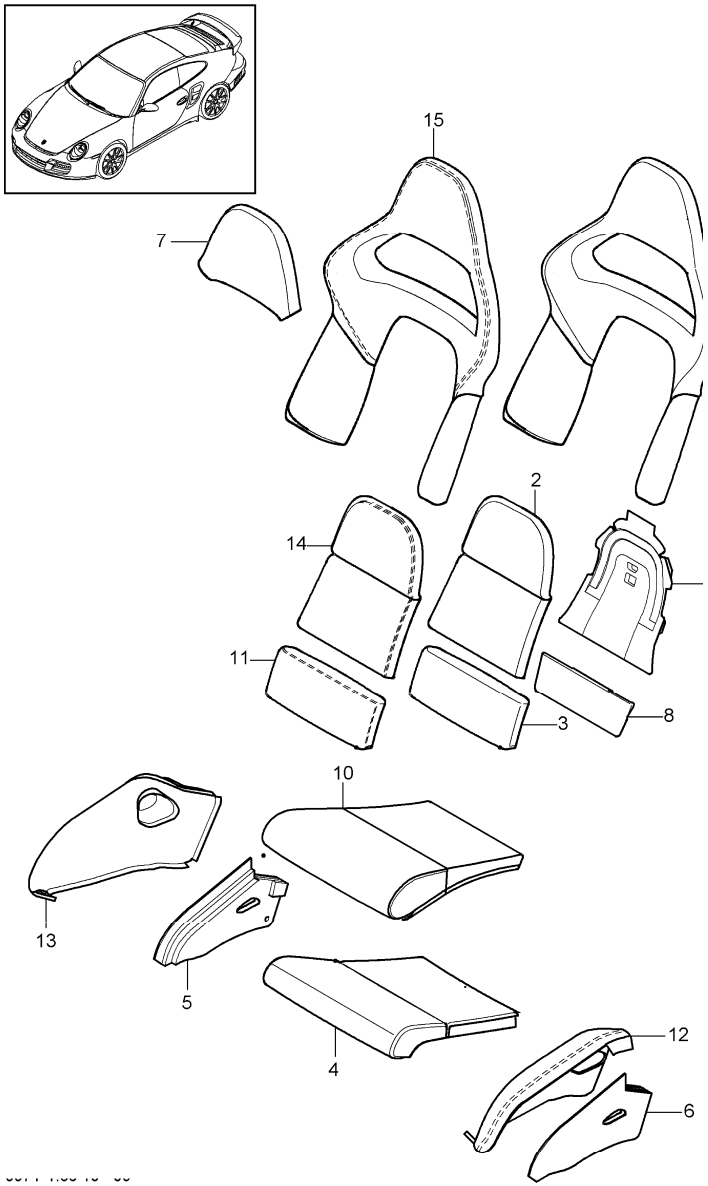

Pos	Part Number	Description	Remark	Qty	Model
		foam part cover seat and backrest surface bucket seat collapsible			
1	997 521 447 00	foam part backrest outer part		2	I388/389
2	997 521 448 00	foam part backrest centre part		2	I388/389
3	997 521 441 00	foam part seat cushion rear		2	I388/389
4	997 521 440 00	foam part seat cushion front		2	I388/389
5	997 521 443 00	foam part seat cushion lateral outer left	/L	1	I388
(5)	997 521 444 00	foam part seat cushion lateral inner left		1	I388
6	997 521 446 00	foam part seat cushion lateral outer right	/R	1	I389
(6)	997 521 445 00	foam part seat cushion lateral inner right	/R	1	I389
7	997 521 458 00	foam part head rest		2	I388/389
8	997 521 456 00	foam part seat cushion rear		1	I388/389
9	997 521 457 00	foam part backrest		1	I388/389

Pos	Part Number	Description	Remark	Qty	Model
10	997 521 380 00	cover for cushion front		1	I388/389/983
	8YR	black			
	5X5	stone grey			
	8G1	sand beige			
	3S8	sea blue			
	9N2	terracotta			
	9Q3	cocoa			
	D11	dark grey/natural			
	T11	brown/natural			
	N11	carrera red			
11	997 521 381 00	cover for cushion rear		1	I388/389/983
	8YR	black			
	5X5	stone grey			
	8G1	sand beige			
	3S8	sea blue			
	9N2	terracotta			
	9Q3	cocoa			
	D11	dark grey/natural			
	T11	brown/natural			
	N11	carrera red			
12	997 521 383 00	cover lateral outer	/L	1	I388/983
	8YR	black			
	5X5	stone grey			
	8G1	sand beige			
	3S8	sea blue			
	9N2	terracotta			
	9Q3	cocoa			
	D11	dark grey/natural			
	T11	brown/natural			
	N11	carrera red			
13	997 521 384 00	cover lateral inner	/L	1	I388/983
	8YR	black			
	5X5	stone grey			
	8G1	sand beige			
	3S8	sea blue			
	9N2	terracotta			
	9Q3	cocoa			
	D11	dark grey/natural			
	T11	brown/natural			
	N11	carrera red			
(13)	997 521 386 00	cover lateral outer	/R	1	I389/983
	8YR	black			
	5X5	stone grey			
	8G1	sand beige			
	3S8	sea blue			
	9N2	terracotta			
	9Q3	cocoa			
	D11	dark grey/natural			
	T11	brown/natural			
	N11	carrera red			
(13)	997 521 385 00	cover lateral inner	/R	1	I389/983
	8YR	black			
	5X5	stone grey			

Pos	Part Number	Description	Remark	Qty	Model
	8G1	sand beige			
	3S8	sea blue			
	9N2	terracotta			
	9Q3	cocoa			
	D11	dark grey/natural			
	T11	brown/natural			
	N11	carrera red			
14	997 521 387 00	cover centre part backrest		1	I388/389/983
	8YR	black			
	5X5	stone grey			
	8G1	sand beige			
	3S8	sea blue			
	9N2	terracotta			
	9Q3	cocoa			
	D11	dark grey/natural			
	T11	brown/natural			
	N11	carrera red			
15	997 521 388 00	cover backrest outer		1	I388/389/983
	8YR	black			
	5X5	stone grey			
	8G1	sand beige			
	3S8	sea blue			
	9N2	terracotta			
	9Q3	cocoa			
	D11	dark grey/natural			
	T11	brown/natural			
	N11	carrera red			

Pos	Part Number	Description	Remark	Qty	Model

Model	Year	MG	SG	Illustration	Restrictions	UPD	20:39	06.02.2010	PET
997T2	2010	8	17	817-64		248	USA / CANADA		

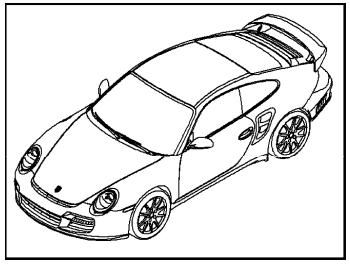

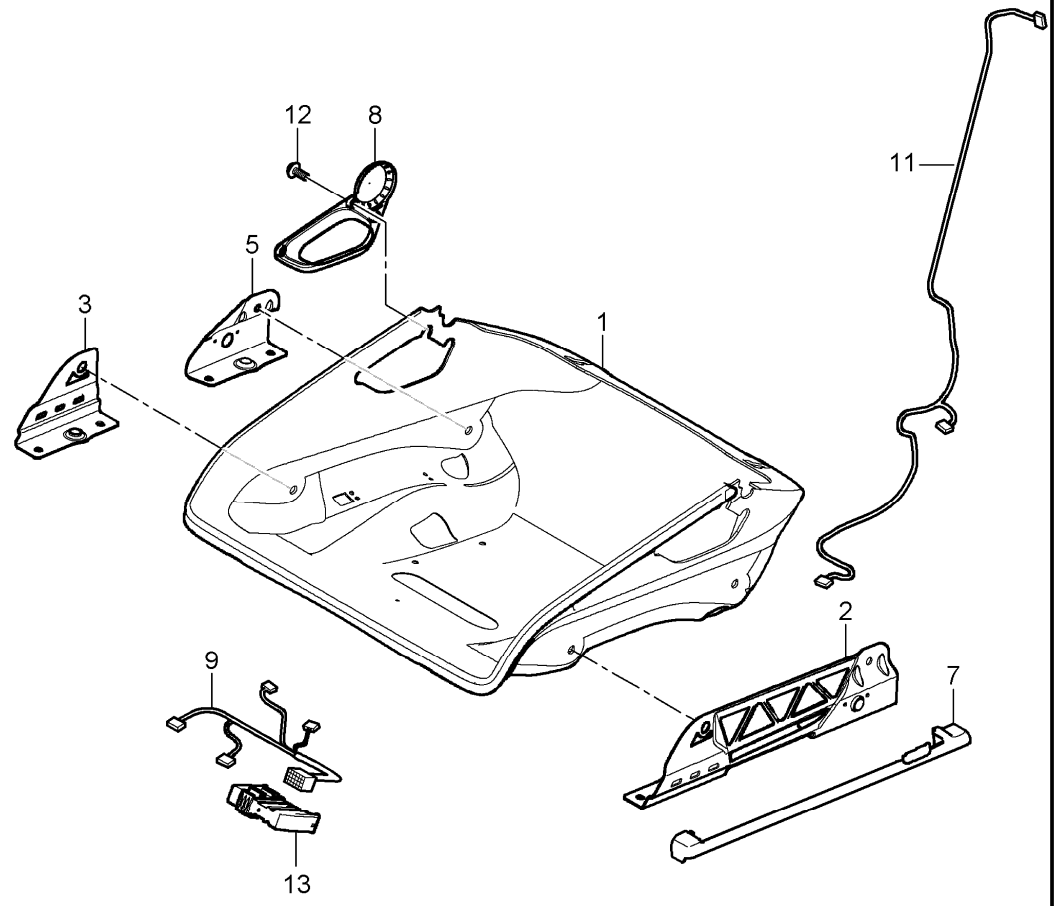

Pos	Part Number	Description	Remark	Qty	Model
		bucket seat collapsible seat adjuster accessories	09-		
1	997 521 281 00	cup seat adjuster without seat occupancy detection		2	I388/389
(1)	997 521 182 00	cup seat adjuster with seat occupancy detection and seat rail	/R	1	I389/560
2	997 521 433 00	adapter seat adjuster outer left		1	I388
(2)	997 521 433 00	adapter seat adjuster outer left		1	I389/560
(2)	997 521 434 00	adapter seat adjuster outer right		1	I389
(2)	997 521 434 00	adapter seat adjuster outer right		1	I389/560
3	997 521 436 00	adapter seat adjuster inner front right		1	I388
(3)	997 521 435 00	adapter seat adjuster inner front left without seat occupancy detection		1	I389
4	999 217 168 01	hexagon-head bolt 8 X 16		X	
5	997 521 438 00	adapter seat adjuster inner rear right		1	I388

Pos	Part Number	Description	Remark	Qty	Model
(5)	997 521 437 00	adapter seat adjuster inner rear left without seat occupancy detection		1	I389
6	997 521 427 03	cover sensor seat occupancy detection	/L	1	I389/560
	01C	satin black			
(6)	997 521 426 03	cover sensor seat occupancy detection	/R	1	I389/560
	01C	satin black			
7	997 521 561 00	cover seat belt lower	/L	1	I388/389
	01C	satin black			
(7)	997 521 562 00	cover seat belt lower	/R	1	I388/389
	01C	satin black			
8	999 141 049 01	lens-head screw mount cover belt seat cushion		3	
9	997 612 688 11	wiring harness seat occupancy detection		1	I389/560
10	997 612 785 10	wiring harness side airbag		1	I388/389
11	997 618 233 05	control unit seat occupancy detection		1	I389/560

Pos	Part Number	Description	Remark	Qty	Model

Model	Year	MG	SG	Illustration	Restrictions	UPD	20:39	06.02.2010
997T2	2010	8	17	817-66		248	USA / CANADA	

PORSCHE PET PORSCHE

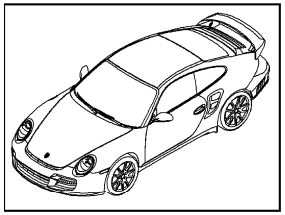

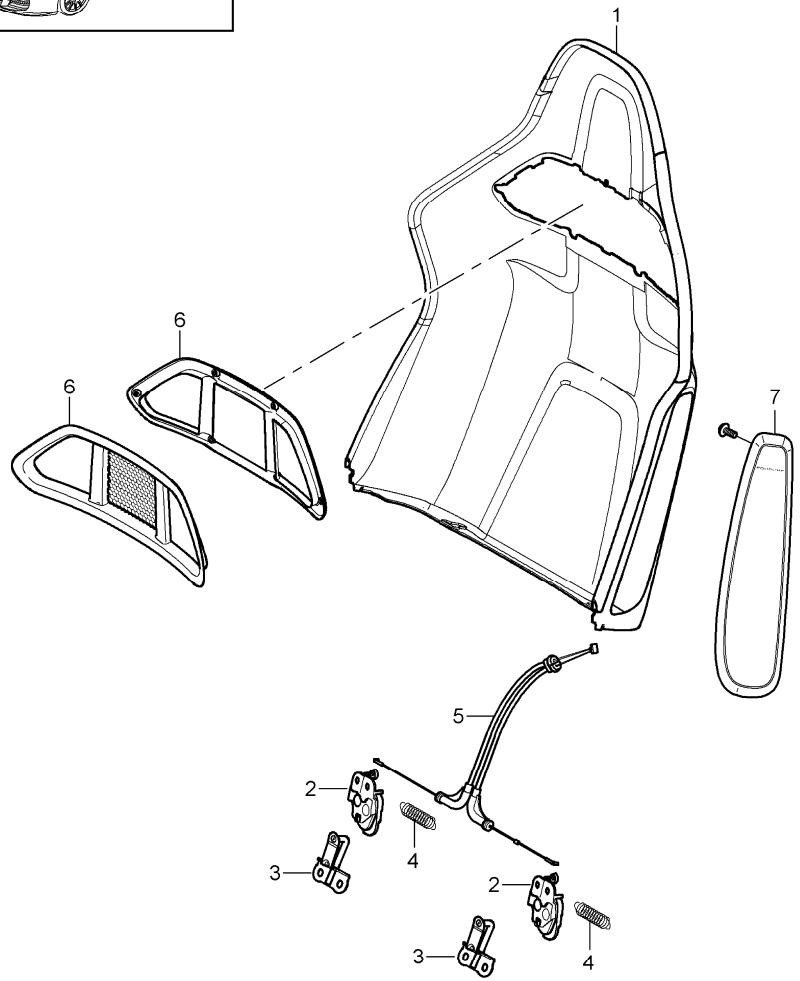

Pos	Part Number	Description	Remark	Qty	Model
		backrest shell bucket seat collapsible accessories	09-		
1	997 521 271 00	backrest shell bucket seat collapsible	/L	1	I388
(1)	997 521 272 00	backrest shell bucket seat collapsible	/R	1	I389
2	997 521 651 00	lock backrest	/L	1	I388/389
(2)	997 521 652 00	lock backrest	/R	1	I388/389
3	997 521 660 00	closing element lock backrest shell		2	I388/389
4	997 521 650 00	tension spring lock backrest		2	I388/389
5	997 521 640 01	bowden cable release backrest		1	I388/389
6	997 521 330 00	cover seat belt front		1	I388/389
	01C	satin black			
(6)	997 521 531 00	cover seat belt rear		1	I388/389
	01C	satin black			
7	997 803 081 02	side airbag front seat		1	I388
	A03	black			
(7)	997 803 082 02	side airbag front seat		1	I389
	A03	black			

Model	Year	MG	SG	Illustration	Restrictions	UPD	20:39	06.02.2010	PET
997T2	2010	9	01	901-00		248	USA / CANADA		

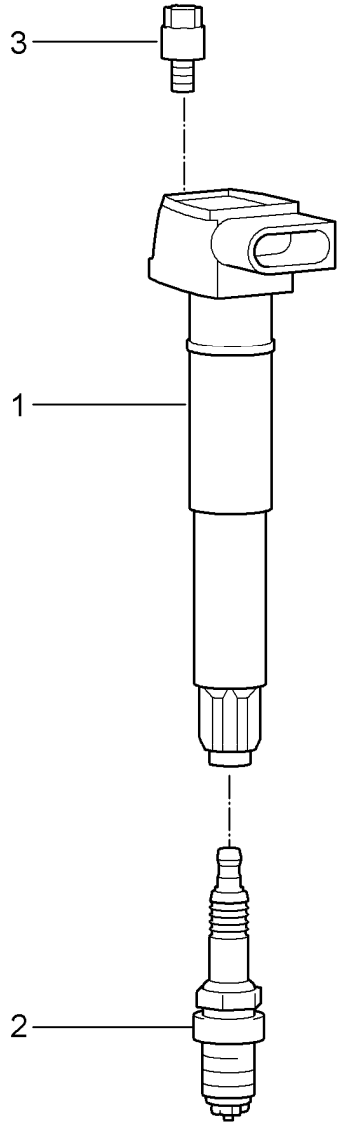

Pos	Part Number	Description	Remark	Qty	Model
		ignition system			
1	9A1 602 104 02	ignition coil		6	
2	999 170 228 90	spark plug FR6 NPP		6	
3	999 073 103 01	round head screw M 6 X 16		6	

Model	Year	MG	SG	Illustration	Restrictions	UPD	20:40	06.02.2010	PORSCHE	PET	PORSCHE
997T2	2010	9	01	901-03		248	USA / CANADA				

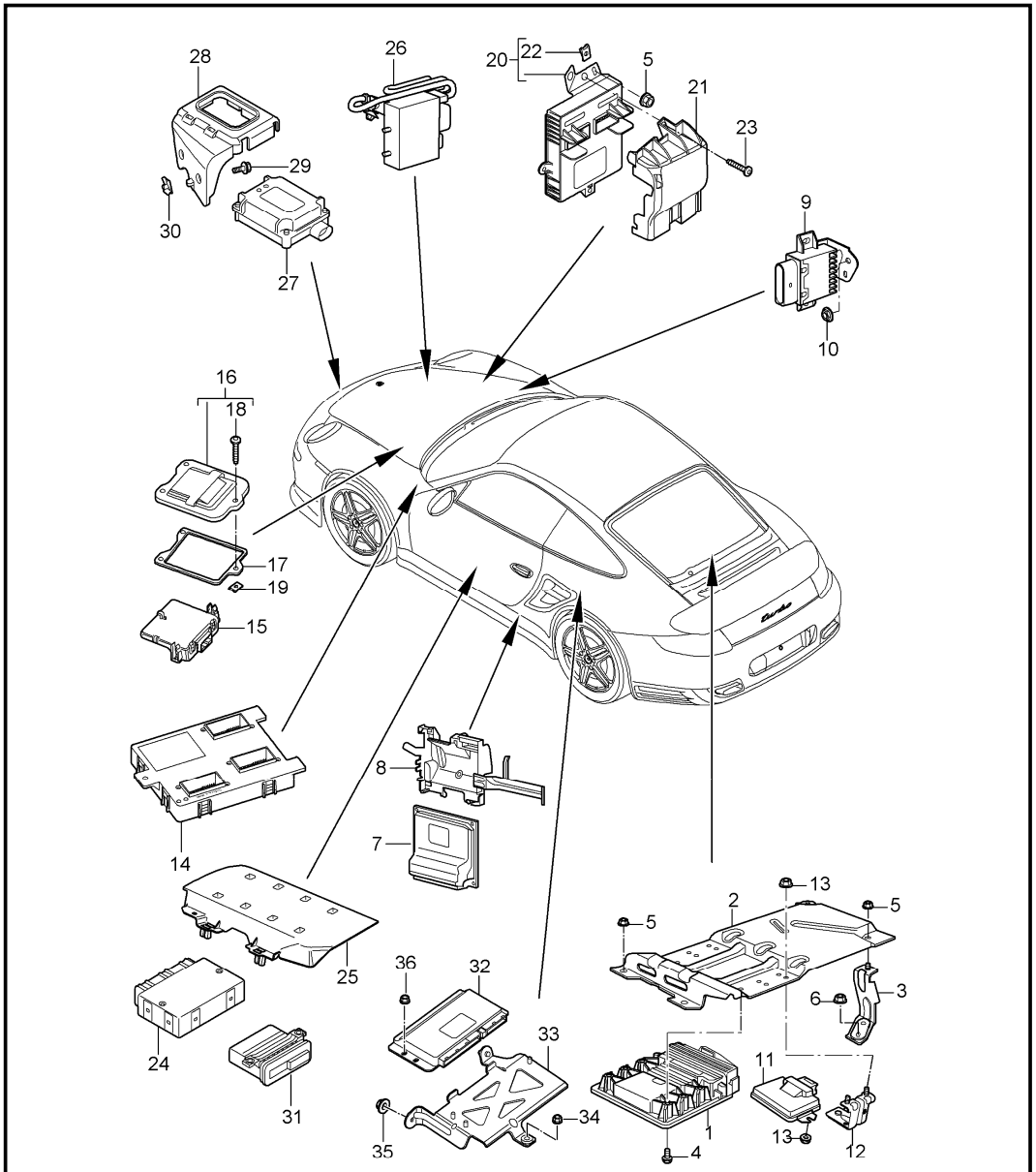

Pos	Part Number	Description	Remark	Qty	Model
		control units			
1	997 618 607 05	control unit - dme -		1	
2	997 618 133 00	support control unit - dme -		1	COUPE
(2)	997 618 141 00	support control unit - dme -		1	CABRIO
3	997 618 134 00	support		1	COUPE
4	999 141 044 09	oval-head screw M 6 X 16		6	
5	999 084 629 01	hexagon nut M 6		4	COUPE
(5)	999 073 228 09	tapping screw 4,8 X 13		3	CABRIO
6	999 049 025 09	collar nut T 5		2	COUPE
7	997 618 270 33	control unit - pdk -		1	I250
8	997 618 255 00	support control unit - pdk -		1	I250
9	997 618 023 01	control unit fuel pump		1	I663
10	999 049 025 09	collar nut T 5		2	
-	-	control unit convertible top control see group 8/11/15		1	CABRIO
11	997 618 195 20	control unit all-wheel		1	
12	997 618 143 00	support control unit all-wheel		2	COUPE
13	900 377 010 01	hexagon nut M 6		6	COUPE
14	997 618 516 01	control unit vehicle electrical system		1	

Pos	Part Number	Description	Remark	Qty	Model
15	997 610 107 04	control unit gateway		1	
16	997 572 419 03	lid		1	
17	997 572 221 00	gasket		1	
18	900 143 094 09	tapping screw ST 4,8 X 19		3	
19	999 591 855 02	speed nut ST 4,8		3	
20	997 618 513 01	control unit FRONT luggage compartment		1	
21	997 551 736 01	cover		1	
22	999 507 462 09	speed nut 4,8		1	
23	999 073 061 02	tapping screw 4,8 X 16		1	
24	997 618 260 08	control unit rear end		1	
25	997 618 381 00	support		1	
26	997 618 436 03	control unit cooling air control		1	
27	997 618 227 02	control unit garage door opener		1	I607
28	997 618 257 00	support control unit garage door opener		1	
29	900 075 505 01	combination screw M 6 X 20		2	
30	999 591 882 01	speed nut M 6		2	
31	997 618 183 01	control unit ParkAssist sensor see group 8/02/05		1	I635 I635
32	997 618 465 03	control unit Unit mount		1	I140
33	997 618 163 00	support control unit Unit mount		1	COUPE I140
34	999 703 236 40	plastic nut		1	COUPE I140
35	999 703 496 40	rubber mounting T 5		2	COUPE I140
36	900 377 010 02	hexagon nut M 6		3	COUPE I140

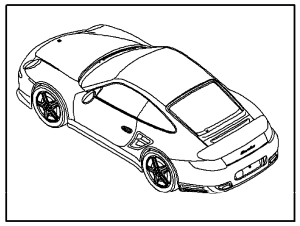

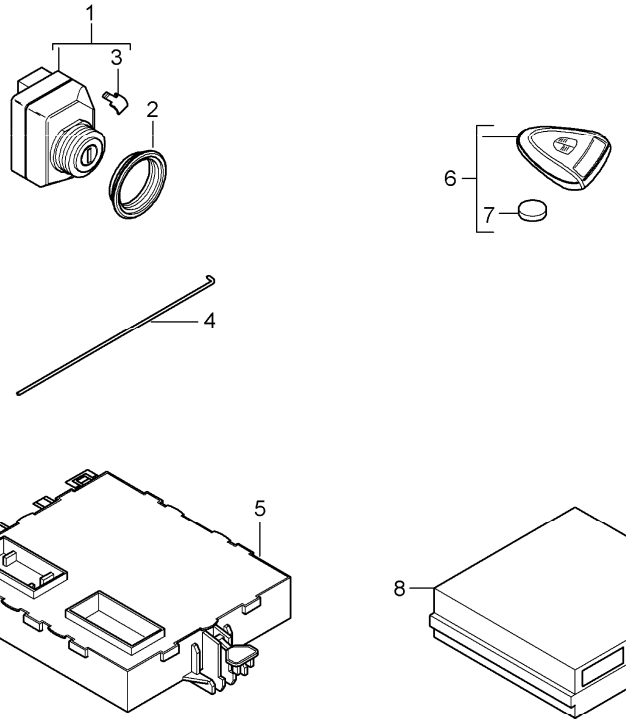

Pos	Part Number	Description	Remark	Qty	Model
		control units ignition starter switch PORSCHE ACCES SYSTEM			
1	997 618 159 04	control unit ignition starter switch		1	
2	997 618 759 00	nut		1	
3	997 618 361 00	cover release Handheld transmitter		1	
4	970 618 761 00	emergency operation release ignition starter switch		1	
5	997 618 172 16	control unit PORSCHE ACCESS SYSTEM		1	I525
-	997 612 053 01	connecting line antenna booster control unit POS. 5	/LL	1	I665
6	997 637 109 01	Handheld transmitter		1	COUPE I525
6	997 637 109 01	Handheld transmitter		1	CABRIO I525 I533
(6)	997 637 103 01	Handheld transmitter		1	CABRIO I525
7	999 611 108 00	battery		1	
8	997 618 210 01	sensor interior monitoring		1	

Model	Year	MG	SG	Illustration	Restrictions	UPD	20:40	06.02.2010	PORSCHE	PET	PORSCHE
997T2	2010	9	02	902-00		248	USA / CANADA				

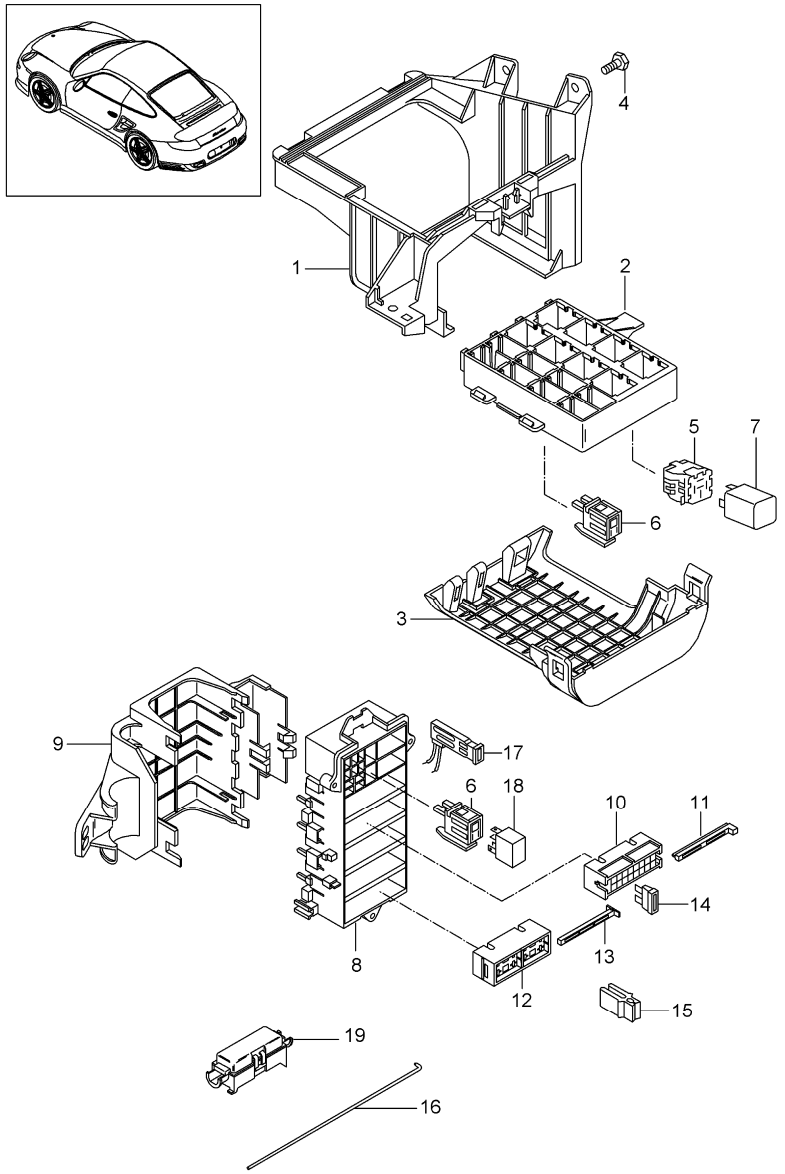

Pos	Part Number	Description	Remark	Qty	Model
		central electrical system dashboard			
1	997 610 117 01	support	/LL	1	I098
2	997 610 110 01	relay carrier support frame		1	
3	997 610 112 00	cover support frame		1	
4	900 378 155 01	hexagon-head bolt M 6 X 16 ASP		2	
(4)	900 377 010 01	hexagon nut M 6		1	
5	928 610 511 00	relay carrier		X	
6	999 650 538 40	relay carrier		X	
7	-	relay			
S1	999 657 015 90	relay fuel pump		1	
S2	999 657 015 90	relay fuel pump		1	
S4	999 657 014 90	relay KL. 86S		1	
S11	999 657 013 90	relay - dme -		1	
S12	999 657 013 90	relay heating		1	
S14	999 657 013 90	relay headlight washer system		1	I288
S15	999 657 013 90	relay starter		1	
S16	999 657 013 90	relay KL. 15		1	
8	997 610 340 00	bracket		1	
9	997 610 341 00	cover		1	
10	999 650 209 40	fuse holder		4	
11	999 650 210 40	slide		4	
12	999 650 750 40	fuse holder		1	

Pos	Part Number	Description	Remark	Qty	Model
13	999 650 749 40	slide		1	
14	999 607 082 00	fuse 5 A		X	
(14)	999 607 083 00	fuse 7 , 5 A		X	
(14)	999 607 084 00	fuse 10 A		X	
(14)	999 607 085 00	fuse 15 A		X	
(14)	999 607 087 00	fuse 25 A		X	
(14)	999 607 088 00	fuse 30 A		X	
(14)	999 607 072 00	fuse 30 A large		X	
(14)	999 607 073 00	fuse 40 A large		X	
15	999 107 300 40	tool		X	
-	997 610 195 25	assignment sticker fuse		X	
16	970 618 761 00	emergency operation release ignition starter switch emergency operation lid		1	
17	996 610 240 00	terminal clamp		1	
18	999 657 014 90	relay		1	
19	997 610 915 00	fuse holder with fuse 80 A for cooling air control		1	
-	-	cover for housing fuse see group 8 / 07 / 02		X	

Pos	Part Number	Description	Remark	Qty	Model

Model	Year	MG	SG	Illustration	Restrictions	UPD	20:40	06.02.2010
997T2	2010	9	02	902-01		248	USA / CANADA	

PORSCHE PET PORSCHE

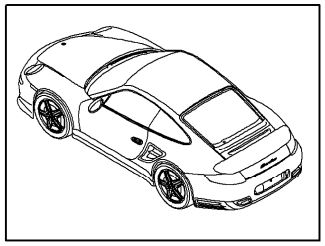

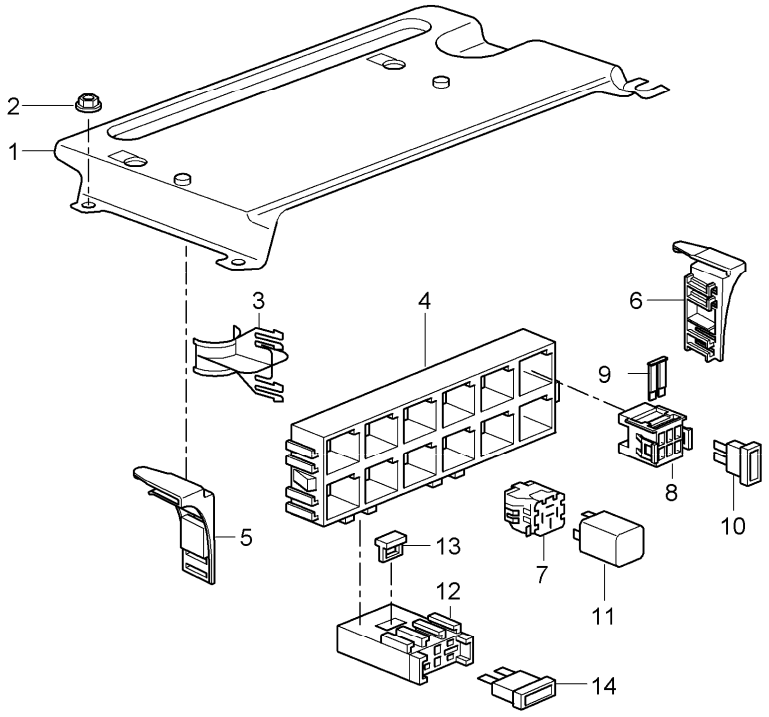

Pos	Part Number	Description	Remark	Qty	Model
		central electrical system rear end			
(1)	996 610 229 03	mounting plate		1	COUPE
2	999 084 629 01	hexagon nut M 6		2	
3	996 610 112 00	cable holder		1	
4	996 610 111 00	relay carrier support frame		X	
5	987 610 118 00	support	/R	1	COUPE
(5)	996 610 126 00	support	/R	1	CABRIO
6	987 610 117 00	support	/L	1	COUPE
(6)	996 610 127 00	support	/L	1	CABRIO
-	996 610 128 00	fixing clip		2	CABRIO
-	999 074 059 01	round head screw M 5		2	CABRIO
7	928 610 511 00	relay carrier		X	
8	999 650 747 40	fuse holder		1	
9	999 650 748 40	locking device		1	
10	999 607 083 00	fuse 7,5 A		X	
10	999 607 085 00	fuse 15 A		X	
11	-	relay			
S1	999 657 013 90	relay rear window heating		1	COUPE
S2	996 615 112 00	relay rear window heating		1	CABRIO
S7	999 657 016 90	relay blower engine compartment		1	
S8	999 657 016 90	relay blower engine compartment		1	
S9	999 657 017 90	relay secondary pump		1	I661

Pos	Part Number	Description	Remark	Qty	Model
12	999 650 193 40	fuse holder		3	
13	999 650 371 40	locking device		3	
14	999 607 073 00	fuse 40 A large		X	
14	999 607 077 00	fuse 60 A large		X	I661

Pos	Part Number	Description	Remark	Qty	Model

Model	Year	MG	SG	Illustration	Restrictions	UPD	20:40	06.02.2010	PORSCHE	PET	PORSCHE
997T2	2010	9	02	902-05		248	USA / CANADA				

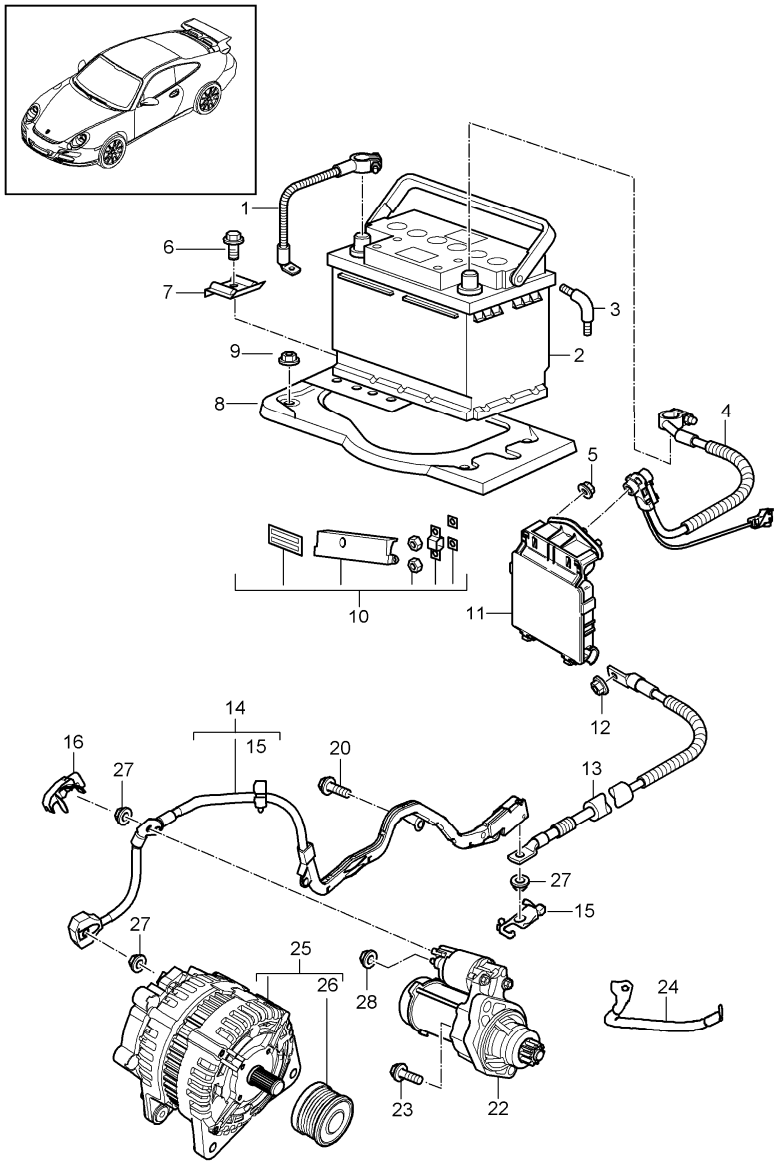

Pos	Part Number	Description	Remark	Qty	Model
		battery power distributor starter generator			
1	997 611 090 00	ground strap	/LL	1	I098
		when required order also:			
-	900 377 010 01	hexagon nut M 6		1	
(2)	999 611 070 20	battery 70 AH		1	
2	999 611 080 20	battery 80 AH		1	
3	893 915 507	angled pipe		1	
4	997 612 993 00	repair kit wiring harness battery power distributor	/LL	1	I098
5	900 380 005 01	hexagon nut VM 8		2	
6	900 378 017 01	hexagon-head bolt M 8 X 20		1	
7	996 611 209 01	rail battery		1	
-	996 504 622 01	gasket carrier plate for battery		1	
9	999 084 630 01	hexagon nut VM 8 SB		4	
10	997 610 912 00	repair kit replacement fuse element comprising:		1	
-	-	fuse element 50 AMPERE		1	
-	-	fuse element 80 AMPERE		1	
-	-	hexagon nut M 5		4	
-	-	square washer		4	

Pos	Part Number	Description	Remark	Qty	Model
-	-	cover blue red		1	
(10)	997 610 913 00	repair kit replacement fuse element comprising:		1	
-	-	fuse element 150 AMPERE		1	
-	-	hexagon nut M 8		2	
-	-	square washer		2	
-	-	cover blue		1	
-	-	seal label red		1	
11	997 610 911 00	repair kit replacement power distributor comprising:		1	
-	-	power distributor without fuse element		1	
-	-	hexagon nut M 5		8	
-	-	hexagon nut M 8		3	
-	-	seal label red when required order also: POS. 12		1	
12	900 084 123 02	hexagon nut M 8		1	
13	997 612 092 25	cable power distributor connection point	/LL	1	I098/480
(13)	997 612 091 25	cable power distributor connection point	/LL	1	I098/250
14	9A1 607 031 01	wiring harness with connection point starter generator		1	I480
(14)	9A1 607 032 00	wiring harness with connection point starter generator		1	I250
15	9A1 607 237 00	lid connection point		1	I480
(15)	9A1 607 230 00	lid connection point		1	I250
16	9A1 607 251 70	protection cap starter		1	
20	900 385 009 01	torx screw BM 6 X 16		X	
22	> 9A1 604 103 00	starter		1	
22	9A1 604 103 X	starter		1	
23	900 385 097 01	torx screw BM 10 X 35		2	
24	9A1 607 070 00	ground strap engine body		1	
25	> 9A1 603 012 00	generator		1	
25	9A1 603 012 X	generator		1	
26	9A1 603 953 00	repair kit pulley mounting parts generator		1	
-	900 385 102 01	torx screw BM 8 X 90		2	
27	900 377 003 01	hexagon nut M 8		3	
28	900 377 010 02	hexagon nut M 6		1	

Model	Year	MG	SG	Illustration	Restrictions	UPD	20:41	06.02.2010	PET
997T2	2010	9	02	902-10		248	USA / CANADA		

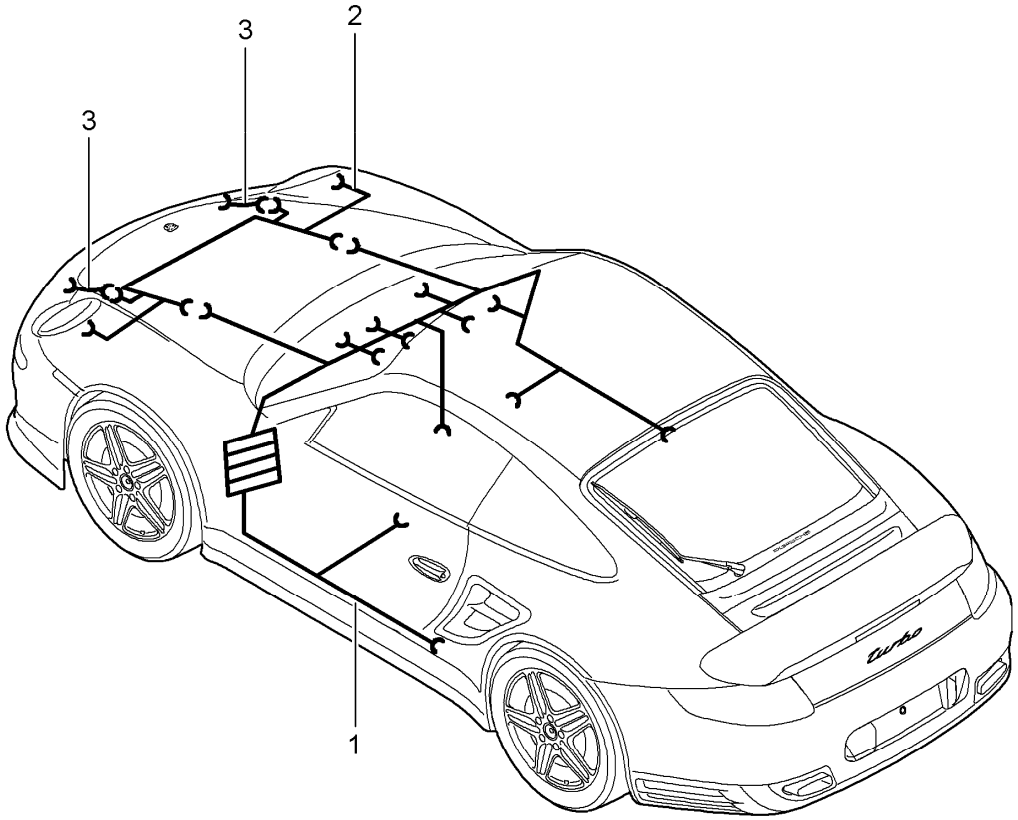

Pos	Part Number	Description	Remark	Qty	Model
		wiring harnesses passenger compartment FRONT luggage compartment lining front airbag seat-belt tensioner repair kits shock absorber anti-lock brake system brake pad wear indicator front axle			
1	997 622 903 00	wiring harness passenger compartment vehicle identification no. indicate		1	
-	996 610 120 01	support plug socket diagnostic connector		1	
-	999 651 302 40	fixing clip wiring harness passenger compartment door sill		X	
-	999 651 284 40	fixing clip wiring harness passenger compartment door sill		X	
2	997 622 521 26	wiring harness FRONT luggage compartment F >>99AS7 60347 F >>A9AS7 73074		1	TURBO I601
2	997 622 521 27	wiring harness FRONT luggage compartment F 99AS7 60348>> F A9AS7 73075>>		1	TURBO I601
2	997 612 522 77	wiring harness FRONT luggage compartment F >>99AS7 60347 F >>A9AS7 73074		1	TURBO I603
2	997 622 522 78	wiring harness FRONT luggage compartment F 99AS7 60348>> F A9AS7 73075>>		1	TURBO I603

Pos	Part Number	Description	Remark	Qty	Model
-	997 610 215 01	cable guide for sensor airbag		2	
3	997 622 501 25	wiring harness lining front		2	TURBO
-	997 612 781 25	wiring harness airbag passenger's side setting 1 connector green		1	
-	997 612 783 25	wiring harness airbag passenger's side setting2 connector yellow		1	
-	997 612 992 00	wiring harness control unit airbag connection point door wiring harness airbag seat see group 8/17/06 8/17/21		2	
-	997 612 793 01	wiring harness seat-belt tensioner		2	
-	997 612 950 00	repair kit wiring harness shock absorber repair kit wiring harness anti-lock brake system brake pad wear indicator front axle	/V	2	TURBO I475
-	997 612 965 00	repair kit wiring harness	/V/L	1	
-	997 612 964 00	repair kit wiring harness when required order also:	/V/R	1	
-	999 513 049 40	tie-wrap		4	
		repair kit wiring harness rear axle see group 9/02/20			

Model	Year	MG	SG	Illustration	Restrictions	UPD	20:41	06.02.2010	PORSCHE PET PORSCHE
997T2	2010	9	02	902-15		248	USA / CANADA		

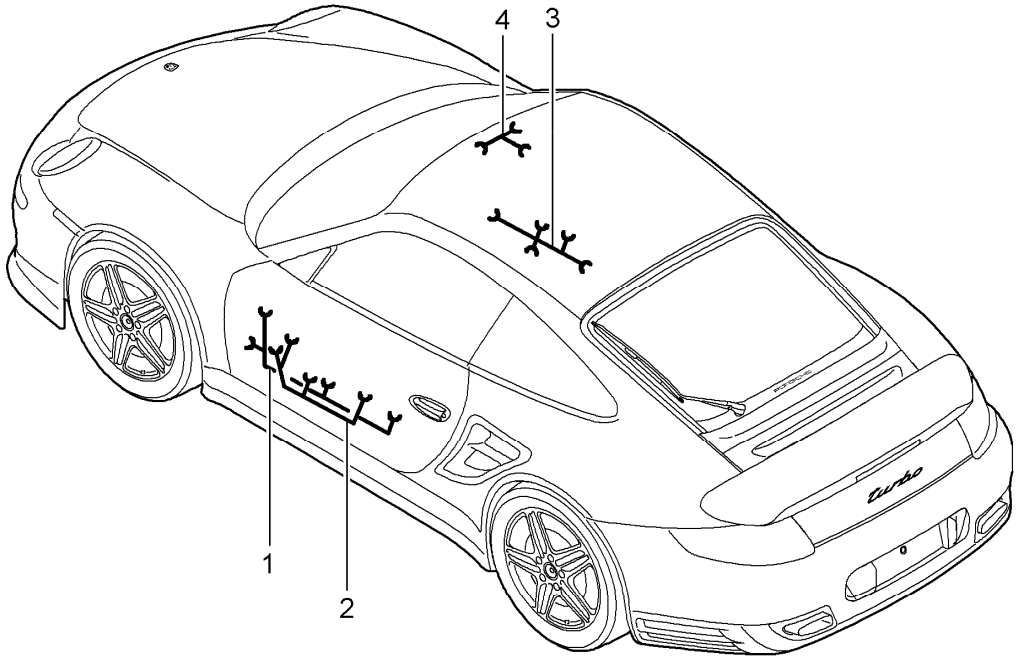

Pos	Part Number	Description	Remark	Qty	Model
		wiring harnesses doors airbag centre console glove compartment convertible top control auxiliary support			
1	997 612 642 07	wiring harness assembly frame driver's door	/LL	1	I098
(1)	997 612 643 57	wiring harness assembly frame passenger's door	/LL	1	I098
-	997 612 780 16	wiring harness airbag		2	
2	997 612 647 10	wiring harness door panel driver's door	/LL	1	I098
(2)	997 612 648 10	wiring harness door panel passenger's door	/LL	1	I098
3	997 612 652 75	wiring harness centre console		1	
4	997 612 651 00	wiring harness glove compartment		1	
-	-	wiring harness convertible top control see group 8/11/07		1	CABRIO
-	-	wiring harness auxiliary support see group 8/11/15		1	CABRIO

Model	Year	MG	SG	Illustration	Restrictions	UPD	20:41	06.02.2010	PORSCHE PET PORSCHE
997T2	2010	9	02	902-20		248	USA / CANADA		

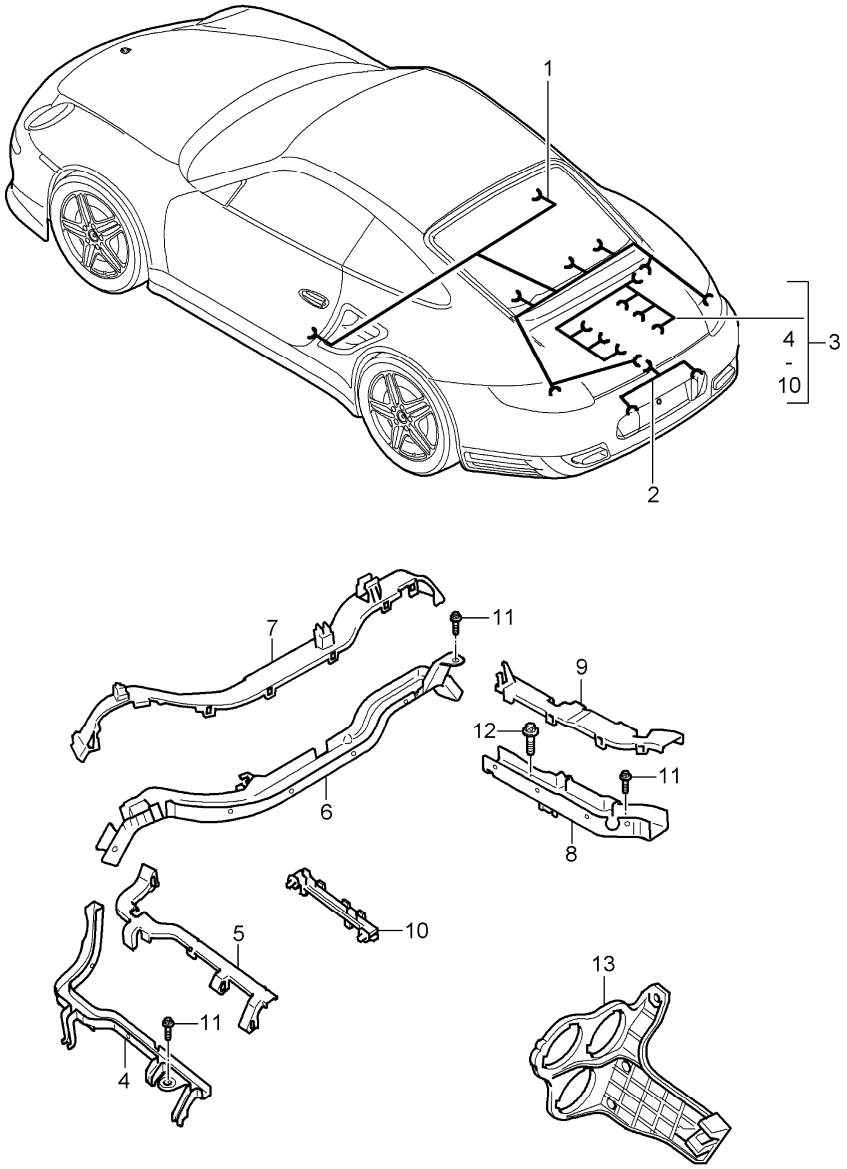

Pos	Part Number	Description	Remark	Qty	Model
		wiring harnesses rear end license plate light engine transmission repair kits shock absorber anti-lock brake system brake pad wear indicator rear axle			
1	997 622 905 00	wiring harness rear end vehicle identification no. indicate		1	
2	997 612 660 01	wiring harness license plate light		1	
(2)	997 612 661 25	wiring harness ParkAssist license plate light		1	I635
-	999 507 944 40	fixing clip for connection point POS.2		1	
3	9A1 607 015 02	wiring harness engine		1	
4	9A1 607 115 00	cable guide cyl. 1 - 3		1	
5	9A1 607 125 00	lid cable guide cyl. 1 - 3		1	
6	9A1 607 110 00	cable guide centre		1	
7	9A1 607 120 01	lid cable guide centre		1	
8	9A1 607 116 00	cable guide cyl. 4 - 6		1	
9	9A1 607 126 00	lid cable guide cyl. 4 - 6		1	
10	9A1 607 113 00	cable guide fuel collection pipe		2	
11	900 385 009 01	torx screw BM 6 X 16		4	

Pos	Part Number	Description	Remark	Qty	Model
12	900 385 044 01	torx screw BM 8 X 16		1	
13	997 610 131 00	support connection point wiring harness engine		1	
-	997 612 950 00	repair kit wiring harness shock absorber repair kit wiring harness anti-lock brake system brake pad wear indicator rear axle	/H	2	I475
-	997 612 967 00	repair kit wiring harness	/H/L	1	
-	997 612 966 00	repair kit wiring harness repair kit wiring harness front axle see group 9/02/10	/H/R	1	

Pos	Part Number	Description	Remark	Qty	Model

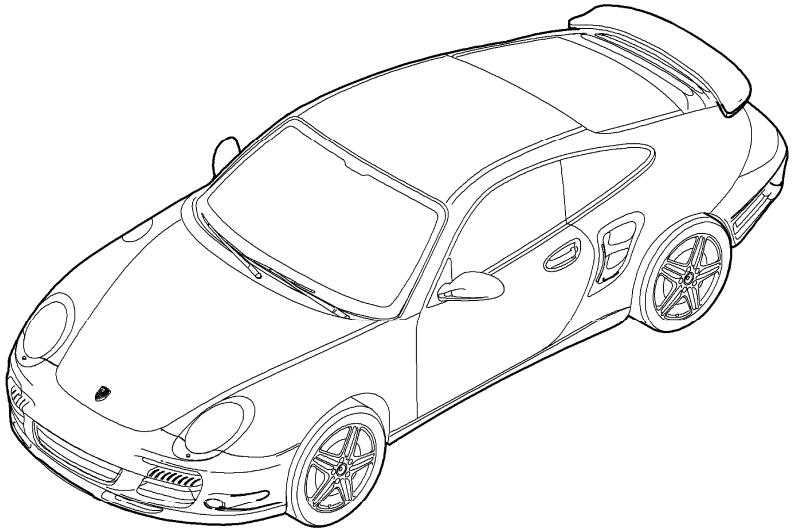

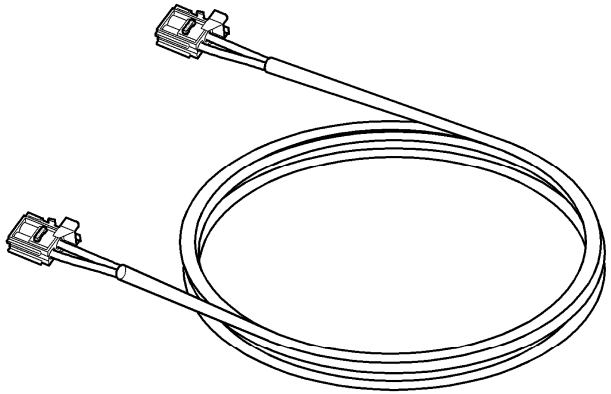

Pos	Part Number	Description	Remark	Qty	Model
		optical waveguide			
-	997 622 701 25	optical waveguide module	/LL	1	I098/665/680

Model	Year	MG	SG	Illustration	Restrictions	UPD	20:42	06.02.2010
997T2	2010	9	03	903-00		248	USA / CANADA	

PORSCHE PET PORSCHE

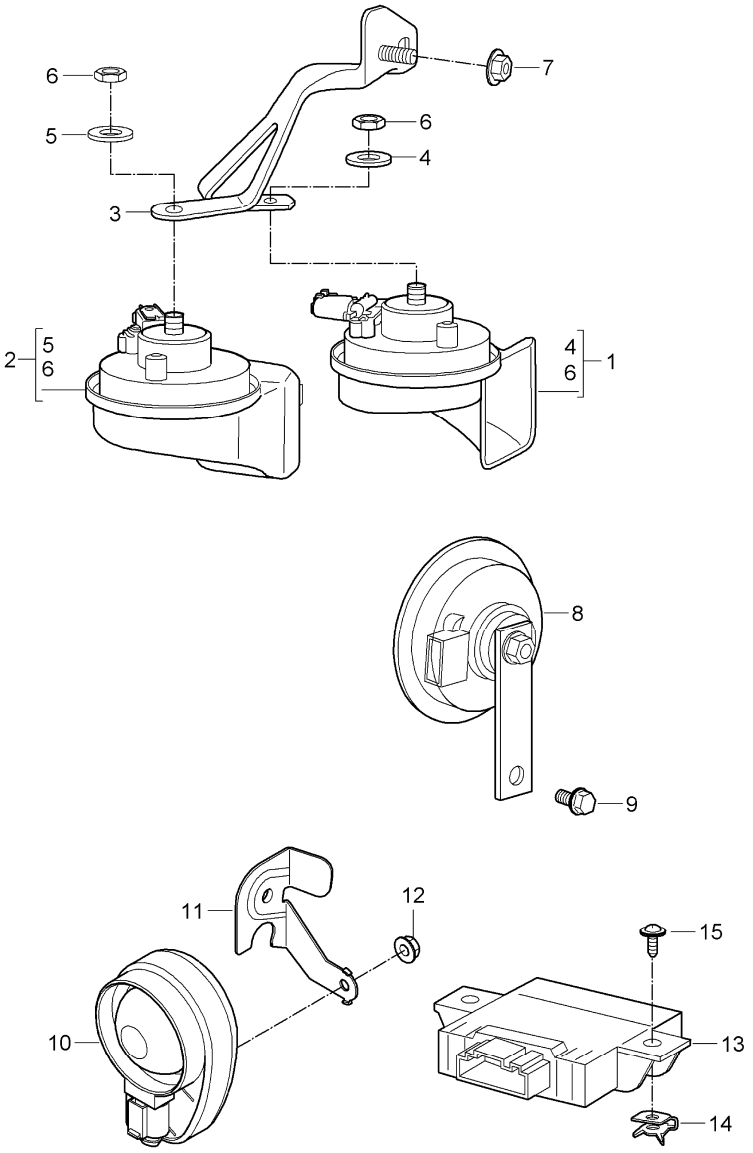

Pos	Part Number	Description	Remark	Qty	Model
		fanfare horn			
1	997 635 206 04	fanfare high-pitched		1	
2	997 635 205 04	fanfare low-pitched		1	
3	997 635 150 05	support		1	
4	-	washer high-pitched		1	
5	-	washer low-pitched		1	
6	900 034 001 04	hexagon nut M 8		2	
7	900 377 003 03	hexagon nut M 8		1	
8	996 637 117 03	horn for alarm system		1	
9	900 075 459 01	combination screw M 6 X 12 Z2		1	

Model	Year	MG	SG	Illustration	Restrictions	UPD	20:42	06.02.2010
997T2	2010	9	03	903-04		248	USA / CANADA	

PORSCHE PET PORSCHE

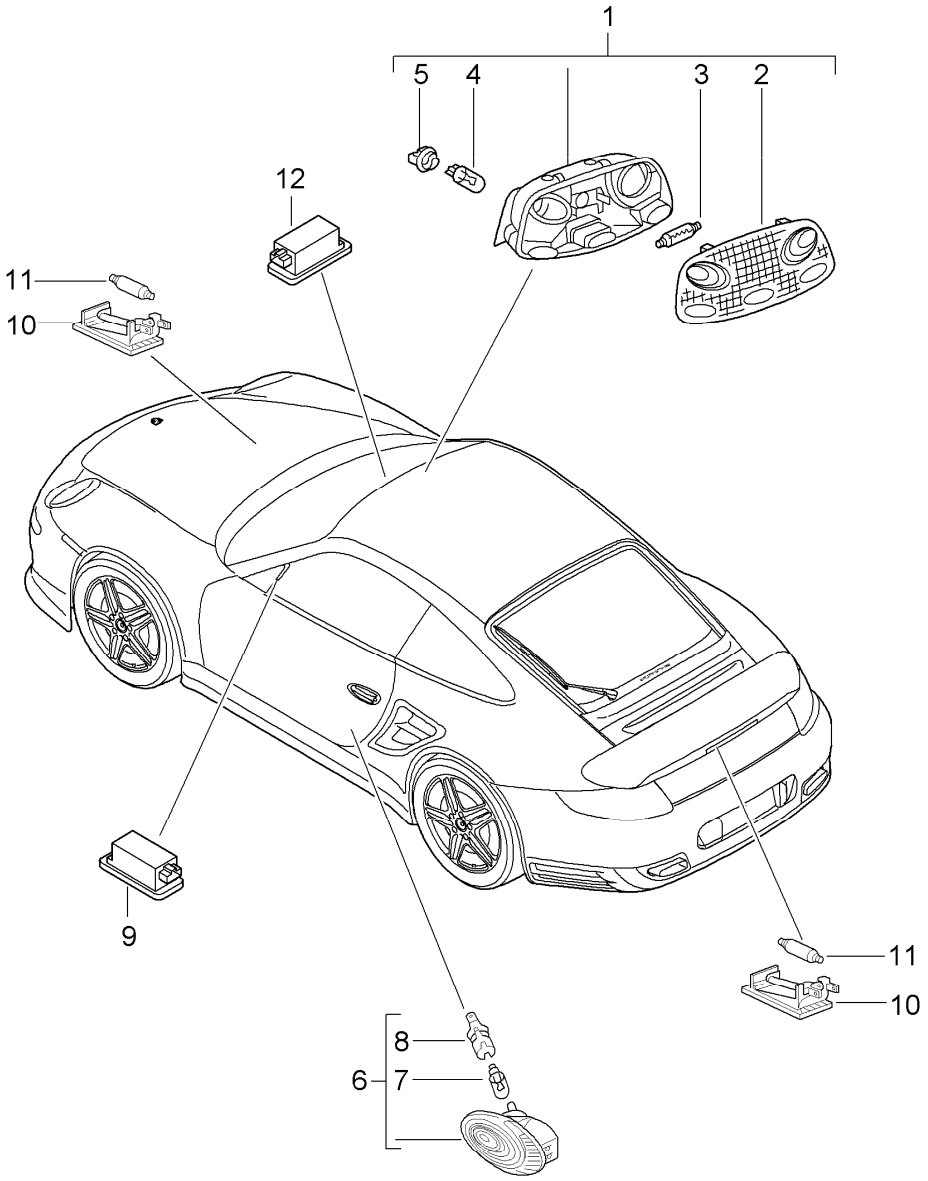

Pos	Part Number	Description	Remark	Qty	Model
		interior lights luggage compartment lamp engine compartment lamp glove compartment light footwell light			
1	997 632 051 00	interior light		1	
2	996 632 151 00	lens		1	
3	900 631 106 90	linolite lamp 10 W		1	
4	999 631 134 90	bulb 6 W		2	
5	999 632 018 00	bulb socket		2	
6	996 632 132 01	door guard light		2	
7	999 631 032 90	bulb 5 W		2	
8	161 949 111	bulb socket		2	
9	955 632 202 00	light footwell		2	
10	997 632 201 00	light engine compartment luggage compartment		2	
11	900 631 106 90	bulb 10 W		2	
12	997 632 071 00	glove compartment light		1	
-	999 631 147 90	bulb 3 W vanity mirror		4	

Model	Year	MG	SG	Illustration	Restrictions	UPD	20:42	06.02.2010	PET
997T2	2010	9	03	903-05		248	USA / CANADA		

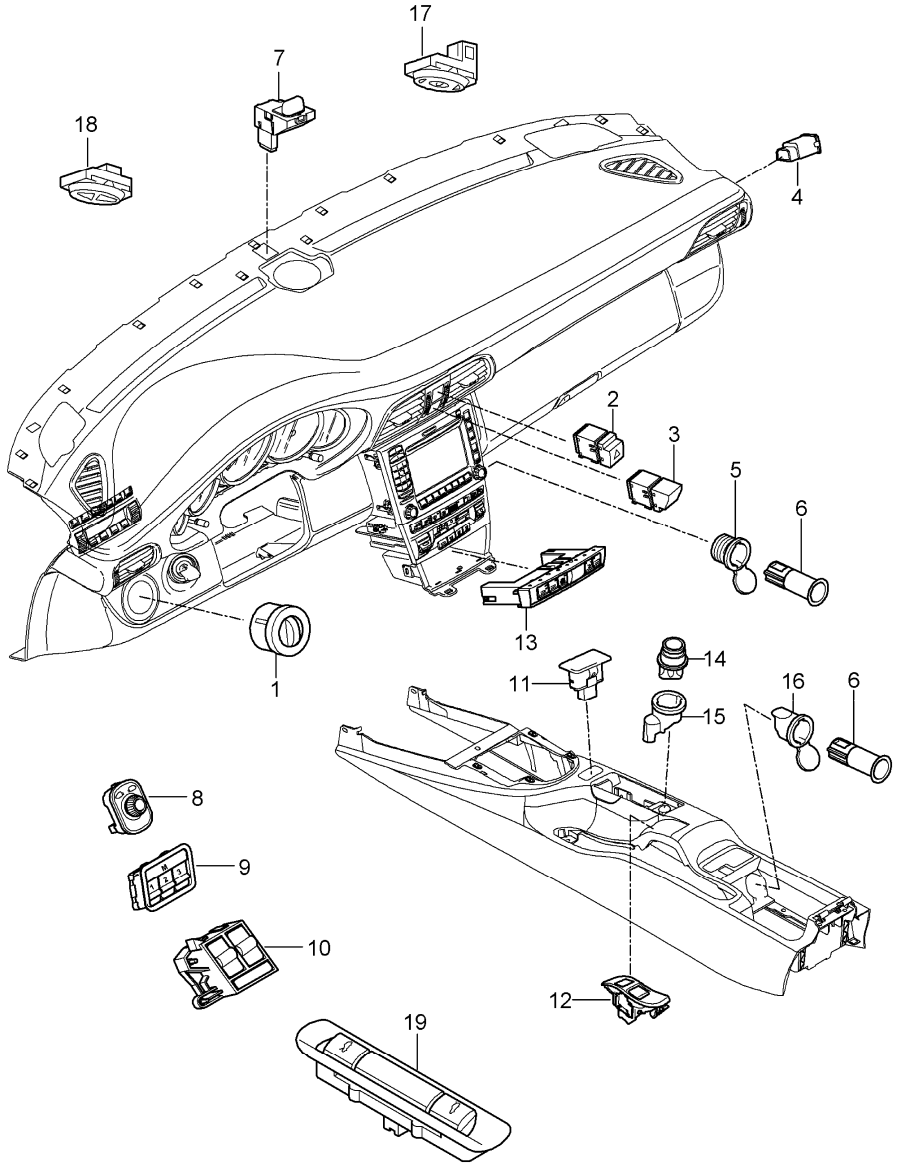

Pos	Part Number	Description	Remark	Qty	Model
		switch			
1	997 613 525 00	light switch		1	I605
	A05	black mat			
2	997 613 120 02	hazard warning light sw.		1	
	A05	black mat			
3	997 613 143 00	switch central locking system		1	
	A05	black mat			
(4)	997 613 211 00	switch airbag		1	
	B41	satin black			
5	997 652 103 00	clamping ring with lid		1	
6	955 652 107 00	plug socket		2	
7	997 653 251 00	sensor air conditioner		1	I573
8	997 613 241 00	switch door mirror		1	
	A05	black mat			
9	997 613 103 00	memory switch	/L	1	I537
	A05	black mat			
(9)	997 613 104 00	memory switch	/R	1	I538
	A05	black mat			
10	997 613 151 11	switch power windows driver's side		1	COUPE
	A05	black mat			
(10)	997 613 153 11	switch power windows driver's side		1	CABRIO
	A05	black mat			
(10)	997 613 156 11	switch power windows passenger's side		1	

Pos	Part Number	Description	Remark	Qty	Model
	A05	black mat			
11	997 641 165 00	indicator light airbag		1	
	A05	black mat			
(12)	997 613 141 11	switch convertible top control		1	CABRIO
	A05	black mat			
(13)	997 613 547 01	combined switch		1	TURBO I475/476/480 I639/640
	A05	black mat			
(13)	997 613 559 01	combined switch		1	TURBO I250/475/476 I639/640
	A05	black mat			
(13)	997 613 545 01	combined switch		1	TURBO I475/476
	A05	black mat			
14	997 652 101 00	cigarette lighter		1	
	A05	black mat			
15	7PP 919 341	headlight unit		1	
16	997 652 104 00	clamping ring with lid		1	
17	997 613 147 00	switch sunroof		1	I650
	A05	black mat			
18	997 613 225 01	switch garage door opener	/L	1	I607/608
	A05	black mat			
(18)	997 613 227 01	switch garage door opener	/R	1	I607/608
	A05	black mat			
(18)	997 613 235 00	cover		2	
	01C	satin black			
19	997 613 105 01	switch lid front and rear		1	
	A05	black mat			

Model	Year	MG	SG	Illustration	Restrictions	UPD	20:42	06.02.2010
997T2	2010	9	03	903-10		248	USA / CANADA	

PORSCHE PET PORSCHE

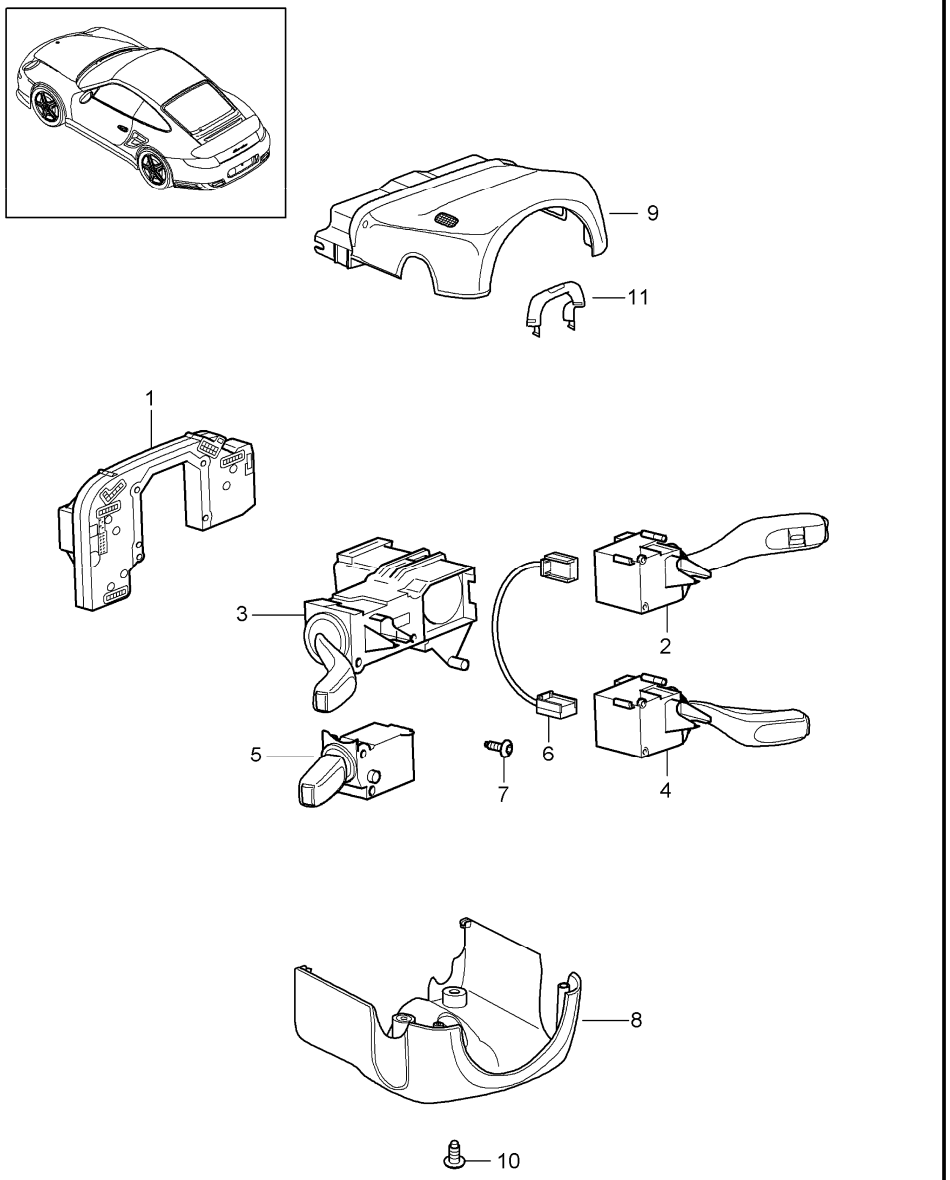

Pos	Part Number	Description	Remark	Qty	Model
		steering column switch			
1	997 613 289 01	electronic unit		1	
1	997 613 299 01	electronic unit		1	I345
2	997 613 253 00	wiper switch		1	I288
	01C	satin black			
(2)	997 613 257 00	wiper switch		1	I288/425
	01C	satin black			
3	997 613 245 00	direction indicator switch		1	
	01C	satin black			
4	997 613 261 00	switch cruise control		1	I454
	01C	satin black			
5	997 613 265 00	switch on-board computer		1	I659
	01C	satin black			
5	997 613 267 00	switch on-board computer		1	I659/671
	01C	satin black			
6	997 622 674 00	wiring harness cruise control		1	I454
7	N 909 068 01	torx screw M 2,5 X 2,6 X 43,5-D		X	
8	997 552 475 02	switch housing lower		1	
	A03	black			
(8)	997 552 475 03	switch housing lower		1	I454
	A03	black			
8	997 552 979 00	switch housing lower leather		1	IXNS
	A11	black			
	5X6	stone grey			

Pos	Part Number	Description	Remark	Qty	Model
	8G2	sand beige			
	3S9	sea blue			
	9S5	terracotta			
	9V6	cocoa			
	D12	dark grey/natural			
	T12	brown/natural			
	N12	carrera red			
(8)	997 552 979 01	switch housing lower leather		1	IXNS/454
	A11	black			
	5X6	stone grey			
	8G2	sand beige			
	3S9	sea blue			
	9S5	terracotta			
	9V6	cocoa			
	D12	dark grey/natural			
	T12	brown/natural			
	N12	carrera red			
9	997 552 273 02	switch housing upper		1	
	A03	black			
9	997 552 997 00	switch housing upper leather		1	IXNS
	A11	black			
	5X6	stone grey			
	8G2	sand beige			
	3S9	sea blue			
	9S5	terracotta			
	9V6	cocoa			

Pos	Part Number	Description	Remark	Qty	Model
	D12	dark grey/natural			
	T12	brown/natural			
	N12	carrera red			
10	999 919 136 01	oval-head screw 3,5 X 18		3	
11	997 610 206 00	cable guide		1	

Model	Year	MG	SG	Illustration	Restrictions	UPD	20:42	06.02.2010
997T2	2010	9	04	904-00		248	USA / CANADA	

PORSCHE PET PORSCHE

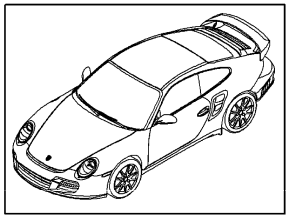

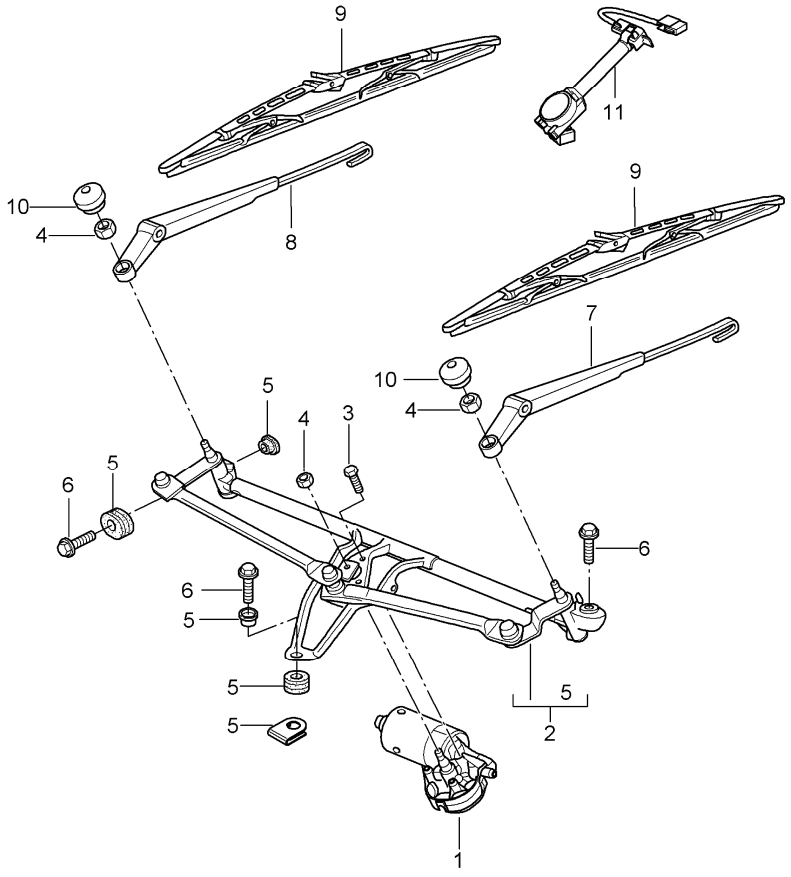

Pos	Part Number	Description	Remark	Qty	Model
		windscreen wiper system rain sensor			
1	997 624 105 01	wiper motor	/LL	1	I098
2	997 628 235 01	crank drive	/LL	1	I098
3	999 073 152 02	torx screw M 6 X 18		3	
4	900 076 064 02	hexagon nut M 8		3	
5	997 628 928 00	repair kit comprising:		1	
-	-	bearing sleeve		1	
-	-	rubber bush		1	
-	-	bearing sleeve		1	
-	-	rubber bush		1	
-	-	clamp		2	
6	999 075 075 01	combination screw M 6 X 22 SC		3	
7	997 628 027 00	wiper arm driver's side	/LL	1	I098
8	997 628 029 00	wiper arm passenger's side	/LL	1	I098
9	996 628 901 08	wiper blade set driver's side passenger's side		1	
10	944 628 305 01	cap		2	
11	997 612 694 00	rain sensor with wiring harness		1	COUPE I267 I268
(11)	997 612 694 25	rain sensor with wiring harness		1	CABRIO I267 I268
-	000 043 204 65	adhesive film for rain sensor		1	

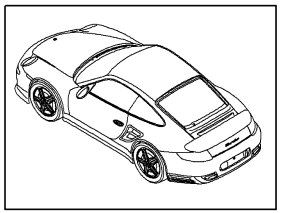

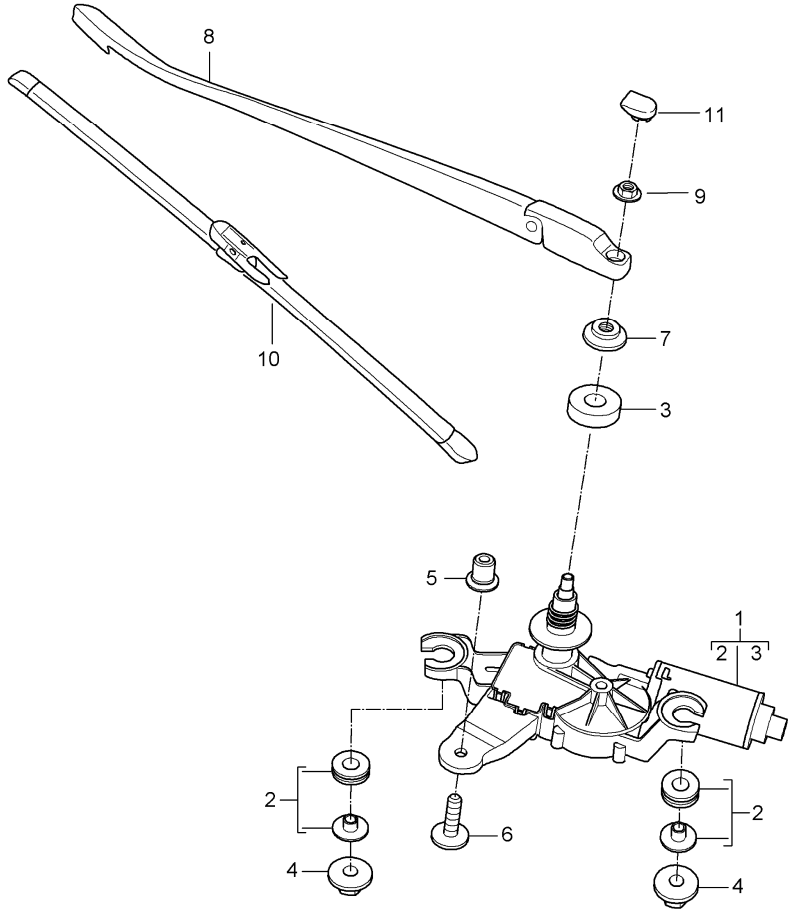

Pos	Part Number	Description	Remark	Qty	Model
		rear window wiper			I425
1	997 628 080 00	wiper motor		1	
2	997 628 908 00	repair kit comprising:		1	
-	-	grommet		2	
-	-	bush		2	
3	997 628 910 00	sealing ring		1	
4	999 076 078 01	hexagon nut M 6		2	
5	999 500 078 00	speed nut		1	
6	999 073 468 01	combination screw M 6 X 22 SC		1	
7	997 628 273 00	grommet		1	
8	997 628 169 00	wiper arm		1	
9	900 377 003 03	hexagon nut		1	
10	997 628 189 00	wiper blade		1	
11	997 628 122 00	cap		1	

Model	Year	MG	SG	Illustration	Restrictions	UPD	20:43	06.02.2010
997T2	2010	9	04	904-10		248	USA / CANADA	

PORSCHE PET PORSCHE

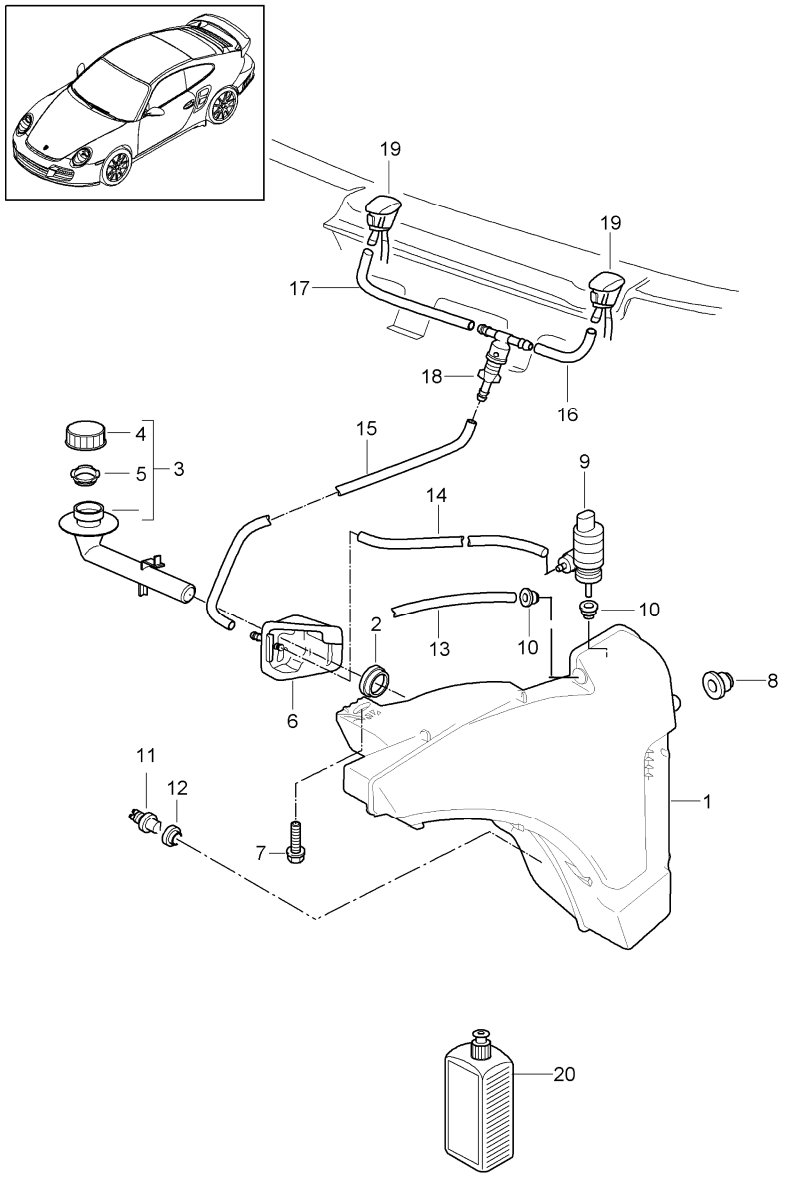

Pos	Part Number	Description	Remark	Qty	Model
		windscreen washer system			
1	997 528 701 01	water reservoir		1	
2	996 528 711 00	gasket		1	
3	997 528 605 00	filler neck		1	
4	996 528 607 00	lid		1	
5	997 528 621 00	strainer		1	
6	996 528 615 01	bracket		1	
-	999 137 091 40	joining socket repair material for bracket 996.528.615.01		X	
7	900 378 154 01	hexagon-head bolt AM 8 X 35 SB		1	
8	999 702 221 40	grommet		2	
9	997 628 182 00	pump		1	
10	431 955 465 B	gasket		2	
11	955 628 105 00	tank gauge switch		1	
12	955 528 721 00	gasket		1	
13	999 181 347 40	breather pipe 273 MM		X	
-	999 181 815 40	hose 5,0 X 2,5		X	
14	-	375 MM		1	
15	-	650 MM		1	
16	-	97 MM		1	
17	-	347 MM		1	
(18)	999 137 005 40	t-piece		1	
19	997 628 077 00	nozzle		2	
20	999 901 017 42	window cleaner 250 ML summer		X	

Model	Year	MG	SG	Illustration	Restrictions	UPD	20:43	06.02.2010
997T2	2010	9	04	904-20		248	USA / CANADA	

PORSCHE PET PORSCHE

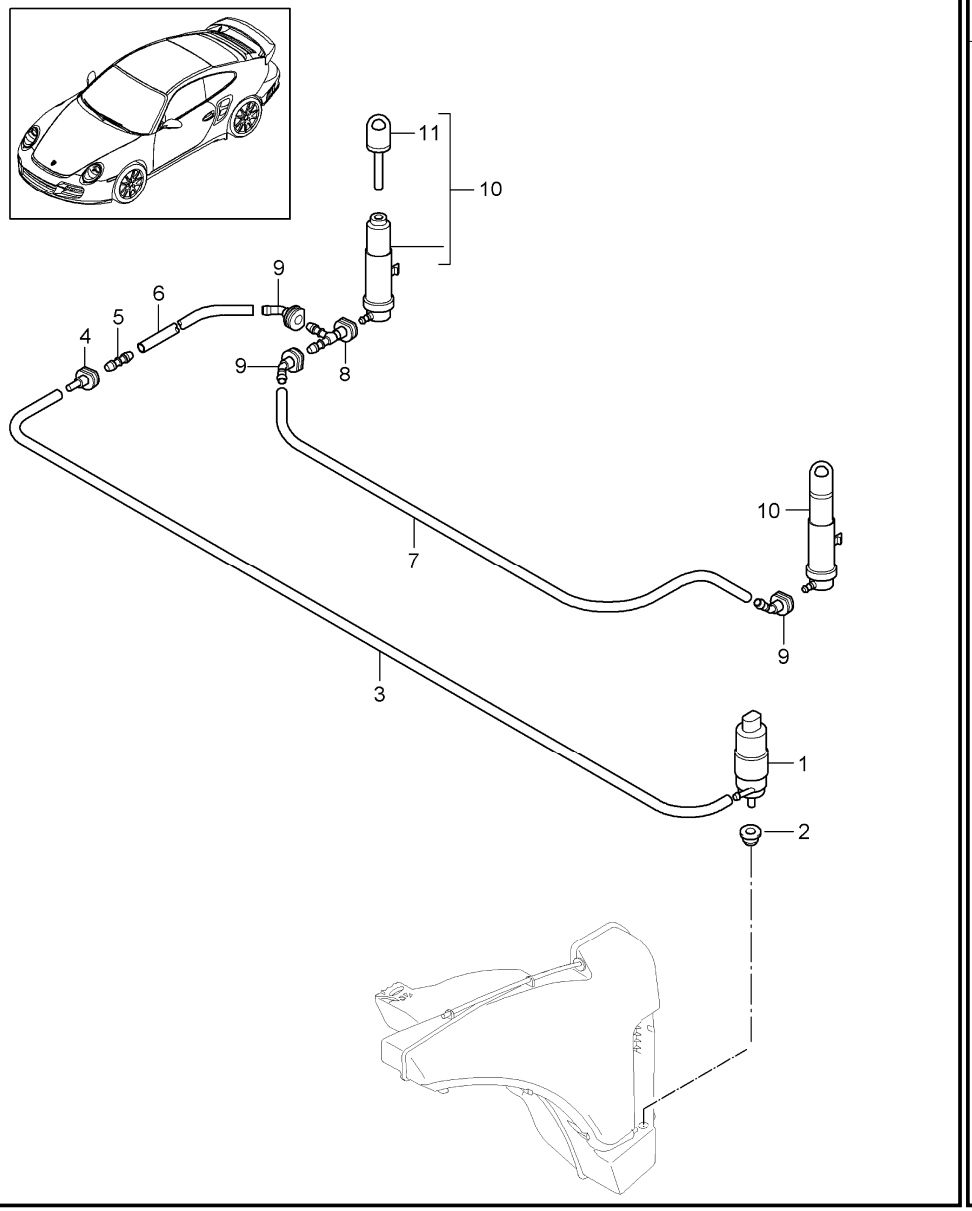

Pos	Part Number	Description	Remark	Qty	Model
		headlight washer system			I288
1	997 624 502 00	pump		1	
2	928 628 193 00	gasket		1	
-	000 043 204 79	hose 8 X 3		X	
3	-	890 MM		1	
4	996 628 204 00	quick-connecting lock		1	
5	997 628 208 00	hose connection		1	
-	999 181 760 40	hose 10 X 3		X	
6	-	405 MM			
7	-	2340 MM			
8	997 628 207 00	t-piece		1	
9	997 628 205 00	quick-connecting lock		3	
10	997 628 133 01	nozzle		2	
11	997 628 231 00	nozzle head		2	
-	997 628 981 02	cap prime coated for POS 10 + 11		2	IXUB

Model	Year	MG	SG	Illustration	Restrictions	UPD	20:43	06.02.2010
997T2	2010	9	05	905-00		248	USA / CANADA	

PORSCHE PET PORSCHE

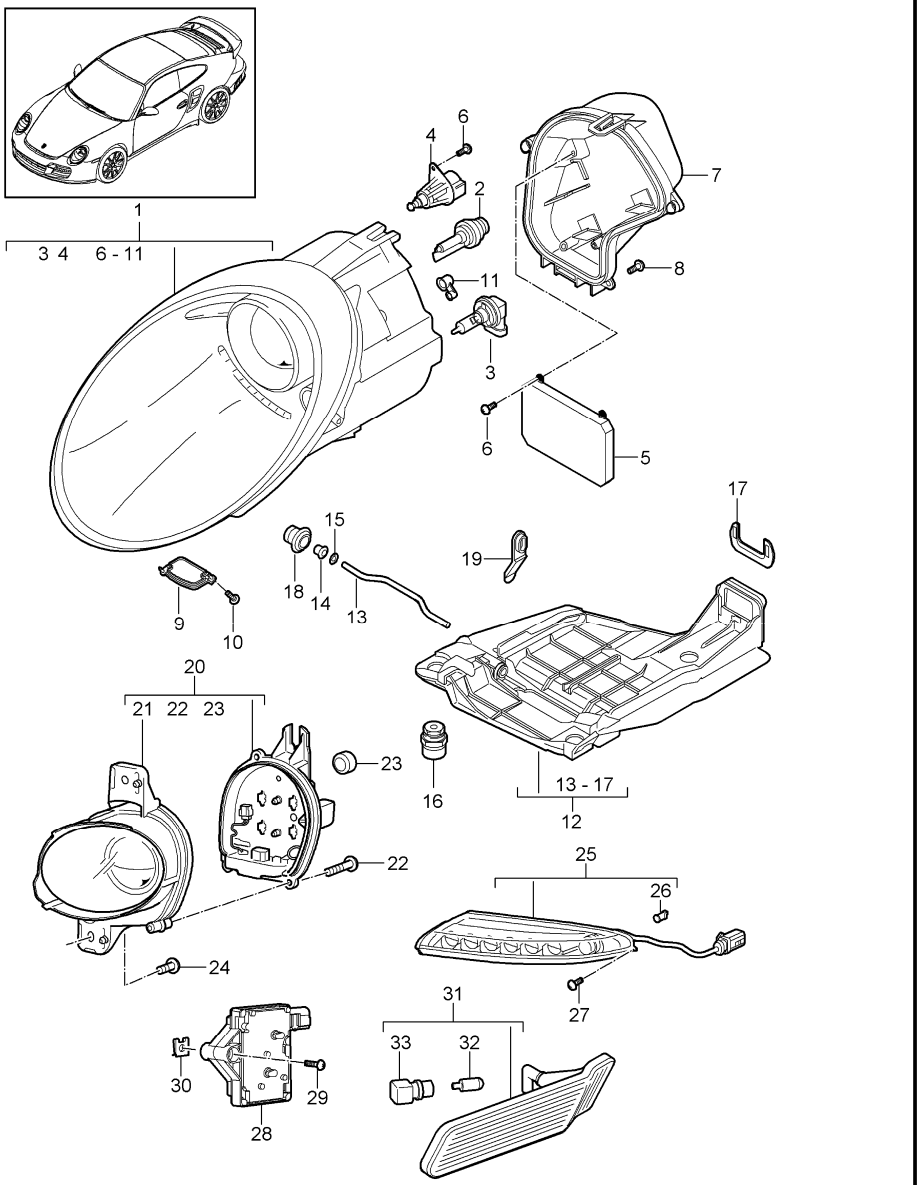

Pos	Part Number	Description	Remark	Qty	Model
		headlamp additional headlamp direction indicator light side marker light headlamp without control unit and bulb XENON			I601
1	997 631 157 23	headlamp	/L	1	
(1)	997 631 158 23	headlamp	/R	1	
2	999 631 036 90	bulb - PHILIPS -		2	
3	999 631 144 91	halogen bulb H 11		2	
4	997 631 141 00	electric motor headlight levelling system		2	
5	997 631 183 00	control unit		2	I601
6	997 631 199 00	screw		6	
7	997 631 101 00	protective cap	/L	1	
(7)	997 631 102 00	protective cap	/R	1	
8	997 631 191 00	screw		8	
9	997 631 149 10	ventilation component	/L	1	
(9)	997 631 150 10	ventilation component	/R	1	
10	997 631 153 00	screw		4	
11	997 631 249 00	ventilation component		2	
12	997 631 073 02	mounting	/L	1	
(12)	997 631 074 02	mounting	/R	1	
13	997 631 273 01	clamping bow		2	
14	997 631 272 00	bearing sleeve		2	
15	900 116 004 09	lock washer		2	
16	997 631 194 02	fastening part		6	
17	997 631 245 00	locking device connector housing		2	

Pos	Part Number	Description	Remark	Qty	Model
18	999 703 413 40	stopper		2	
19	993 631 170 03	stopper		2	
(19)	996 631 127 01	stopper		2	
		additional headlamp			
20	997 631 077 01	additional headlamp	/L	1	I605
(20)	997 631 078 01	additional headlamp	/R	1	I605
21	997 631 177 00	housing for light	/L	1	I605
(21)	997 631 178 00	housing for light	/R	1	I605
22	997 631 297 00	screw		6	I605
23	987 631 291 00	cap		2	I605
24	999 073 231 09	tapping screw 4,8 X 16		4	
		direction indicator light			
25	997 631 091 03	direction indicator light when required order also:	/L	1	
-	999 902 057 40	velcro fastener 25 X 30		2	
(25	997 631 092 03	direction indicator light when required order also:	/R	1	
-	999 902 057 40	velcro fastener 25 X 30		2	
26	999 631 040 90	bulb 5 W position light		2	
27	999 073 080 02	tapping screw 4,2 X 16		2	
28	997 618 201 00	control unit direction indicator light		2	
29	999 073 376 01	tapping screw 6,3 X 45		2	
30	999 507 003 01	speed nut 6,3		2	
		side marker light			
31	997 631 037 02	side marker light	/L	1	
(31)	997 631 038 02	side marker light	/R	1	
32	900 631 019 90	glass-base bulb 3 W white		2	
33	997 631 133 00	bulb socket		2	

Model	Year	MG	SG	Illustration	Restrictions	UPD	20:44	06.02.2010	PORSCHE	PET	PORSCHE
997T2	2010	9	05	905-01		248	USA / CANADA				

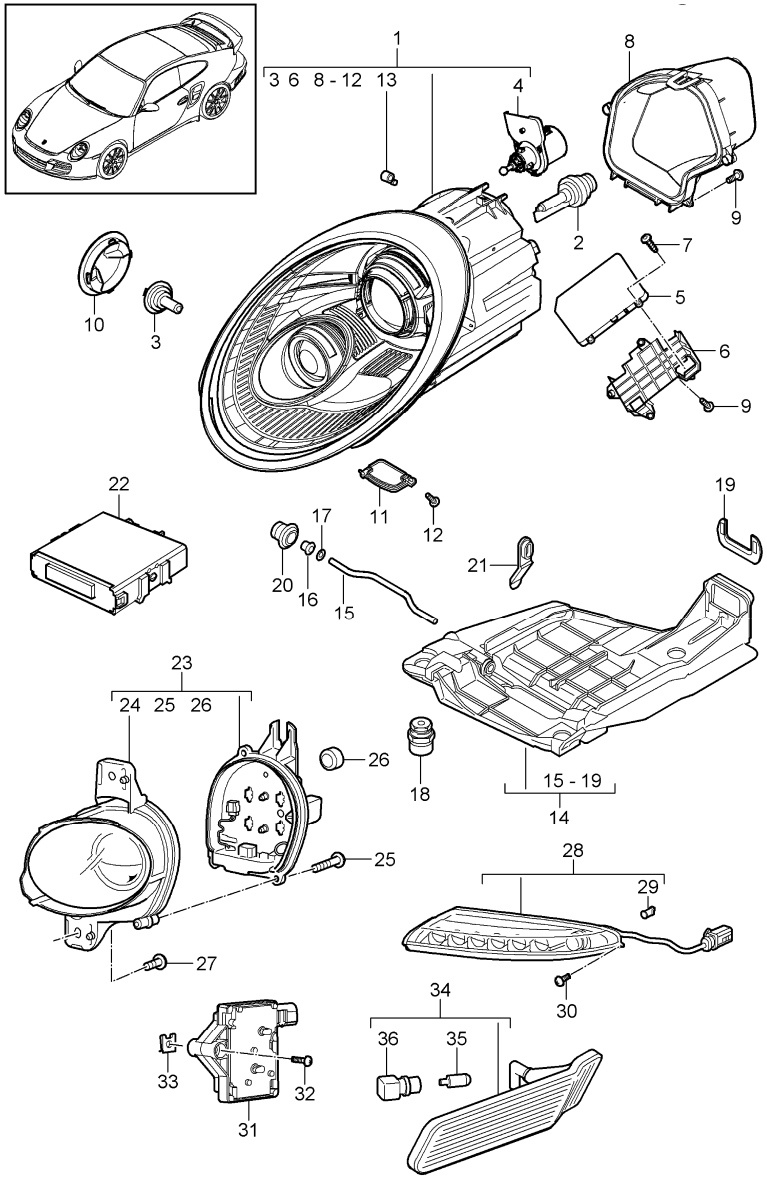

Pos	Part Number	Description	Remark	Qty	Model
		headlamp additional headlamp side marker light headlamp without control unit and bulb XENON			I603
1	997 631 169 21	headlamp	/L	1	
(1)	997 631 170 21	headlamp	/R	1	
2	999 631 036 90	bulb - PHILIPS -		2	
3	999 631 133 91	halogen bulb H 7		2	
4	997 631 227 01	electric motor headlight levelling system	/L	1	
(4)	997 631 228 01	electric motor headlight levelling system	/R	1	
5	997 631 283 01	control unit		2	
6	997 631 223 00	support	/L	1	
(6)	997 631 224 00	support	/R	1	
7	997 631 199 00	screw		4	
8	997 631 201 00	protective cap	/L	1	
(8)	997 631 202 00	protective cap	/R	1	
9	997 631 191 00	screw		14	
10	997 631 211 00	protective cap high beam		2	
11	997 631 149 10	ventilation component	/L	1	
(11)	997 631 150 10	ventilation component	/R	1	
12	997 631 153 00	screw		4	
13	997 631 249 00	breather adapter		2	
14	997 631 073 02	mounting	/L	1	
(14)	997 631 074 02	mounting	/R	1	
15	997 631 273 01	clamping bow		2	

Pos	Part Number	Description	Remark	Qty	Model
16	997 631 272 00	bearing sleeve		2	
17	900 116 004 09	lock washer		2	
18	997 631 194 02	fastening part		6	
19	997 631 245 00	locking device connector housing		2	
20	999 703 413 40	stopper		2	
21	993 631 170 03	stopper		4	
(21)	996 631 127 01	stopper		2	
22	997 618 321 02	control unit Dynamic cornering light		1	
		additional headlamp			
23	997 631 077 01	additional headlamp	/L	1	I605
(23)	997 631 078 01	additional headlamp	/R	1	I605
24	997 631 177 00	housing for light	/L	1	I605
(24)	997 631 178 00	housing for light	/R	1	I605
25	997 631 297 00	screw		6	I605
26	987 631 291 00	cap		2	I605
27	999 073 231 09	tapping screw 4,8 X 16		4	
		direction indicator light			
28	997 631 091 03	direction indicator light when required order also:	/L	1	
-	999 902 057 40	velcro fastener 25 X 30		2	
(28)	997 631 092 03	direction indicator light when required order also:	/R	1	
-	999 902 057 40	velcro fastener 25 X 30		2	
29	999 631 040 90	bulb 5 W position light		2	
30	999 073 080 02	tapping screw 4,2 X 16		2	
31	997 618 201 00	control unit direction indicator light		2	
32	999 073 376 01	tapping screw 6,3 X 45		2	
33	999 507 003 01	speed nut 6,3		2	
		side marker light			
34	997 631 037 02	side marker light	/L	1	
(34)	997 631 038 02	side marker light	/R	1	
35	900 631 019 90	bulb 3 W white		2	
36	997 631 133 00	bulb socket		2	

Model	Year	MG	SG	Illustration	Restrictions	UPD	20:44	06.02.2010	PORSCHE PET PORSCHE
997T2	2010	9	05	905-05		248	USA / CANADA		

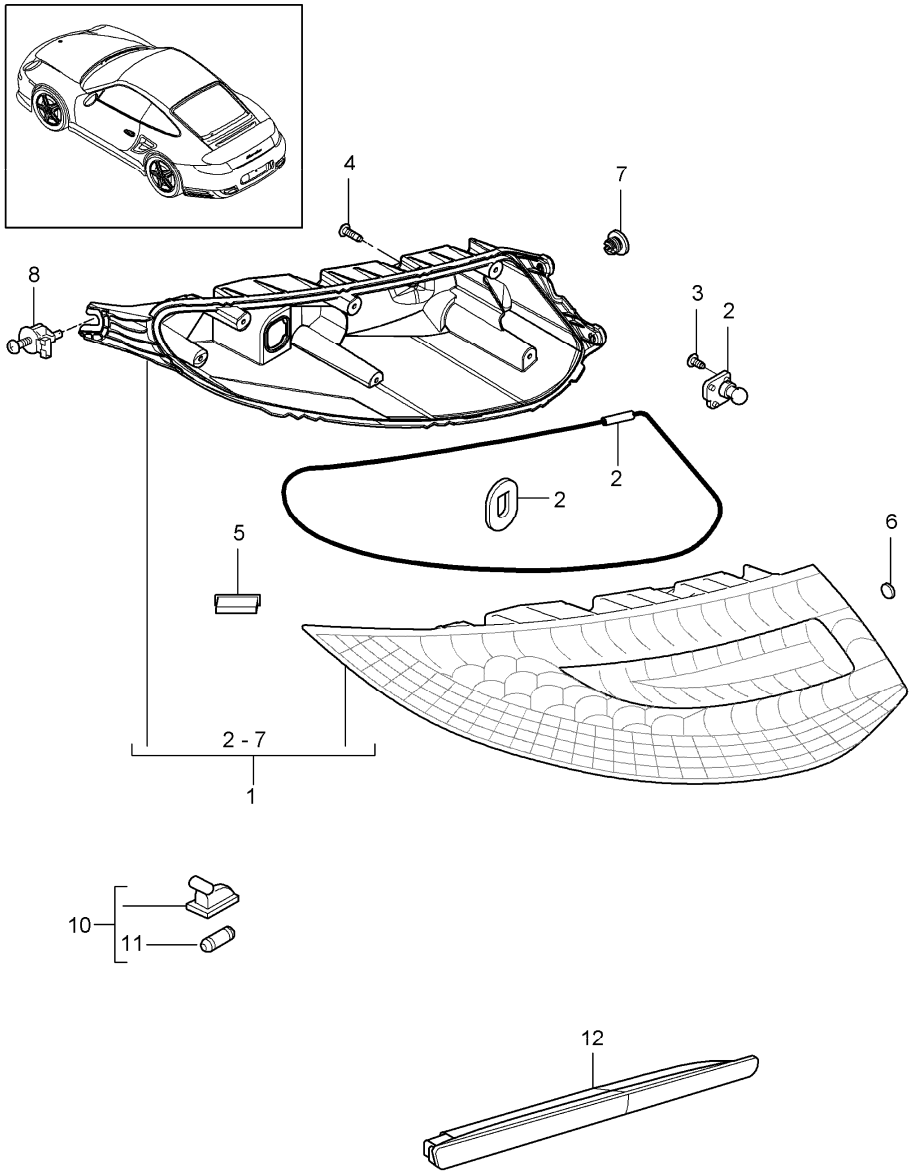

Pos	Part Number	Description	Remark	Qty	Model
		rear light license plate light additional brake light	10-		
1	997 631 413 02	rear light	/L	1	
1	997 631 991 00	rear light	/L	1	IXXG
(1)	997 631 414 02	rear light	/R	1	
(1)	997 631 992 00	rear light	/R	1	IXXG
2	997 631 931 01	repair kit bulb back-up light		2	
3	997 631 598 00	screw		6	
4	997 631 497 00	screw		14	
5	997 631 585 00	buffer		2	
6	997 631 441 00	ventilation component		4	
7	997 631 499 00	screw		4	
8	997 631 471 00	mounting		2	
10	997 631 620 01	license plate light		2	
11	900 631 025 90	bulb 12V 5W		2	
12	997 631 052 01	additional brake light		1	

Model	Year	MG	SG	Illustration	Restrictions	UPD	20:44	06.02.2010	PORSCHE PET PORSCHE
997T2	2010	9	06	906-01		248	USA / CANADA		

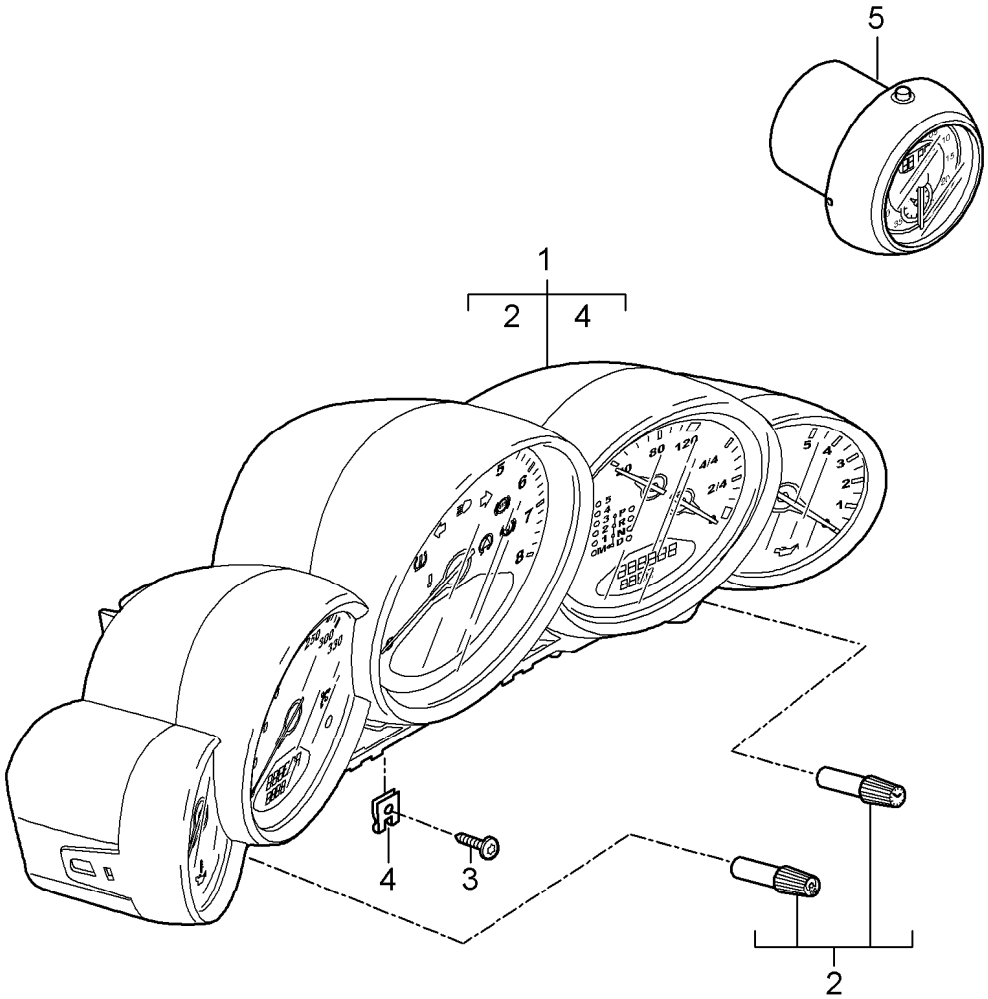

Pos	Part Number	Description	Remark	Qty	Model
		instruments stopwatch			
		see technical information GR. 9 NR. 5/09 KD - NR. 9025			
1	997 641 335 01	instrument cluster complete	(USA)	1	I023/480
	D07	volcano grey			
1	997 641 336 01	instrument cluster complete	(USA)	1	I023/250
	D07	volcano grey			
1	997 641 333 01	instrument cluster complete	(CDN)	1	I023/480
	D07	volcano grey			
1	997 641 334 01	instrument cluster complete	(CDN)	1	I023/250
	D07	volcano grey			
2	997 641 911 00	knob actuator trip meter and clock		1	
3	999 073 155 09	tapping screw 4,2 X 19		2	
4	999 507 403 02	u-clamp		2	
		stopwatch			
5	997 641 311 26	stopwatch		1	I026/639/640
	V05	galvano silver			

Model	Year	MG	SG	Illustration	Restrictions	UPD	20:44	06.02.2010	PORSCHE	PET	PORSCHE
997T2	2010	9	06	906-02		248	USA / CANADA				

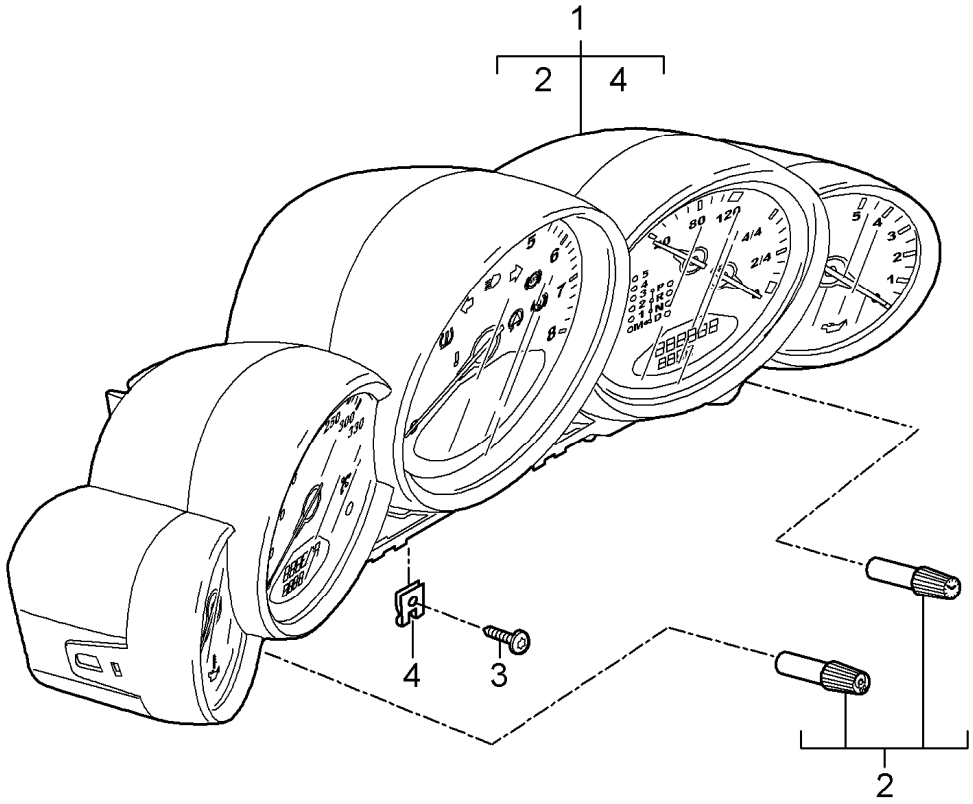

Pos	Part Number	Description	Remark	Qty	Model
		instruments exclusive programme see technical information GR. 9 NR. 5/09 KD - NR. 9025			
(1)	997 641 985 55	instrument cluster complete dial lacquered	(USA)	1	I480
	5Z1	sand beige			IXFD
	84A	guards red			IXFG
	12H	speed yellow			IXFH
	B9A	carrara white			IXFJ
1	997 641 985 56	instrument cluster complete dial lacquered	(USA)	1	I250
	5Z1	sand beige			IXFD
	84A	guards red			IXFG
	12H	speed yellow			IXFH
	B9A	carrara white			IXFJ
(1)	997 641 985 53	instrument cluster complete dial lacquered	(CDN)	1	I480
	5Z1	sand beige			IXFD
	84A	guards red			IXFG
	12H	speed yellow			IXFH
	B9A	carrara white			IXFJ
1	997 641 985 54	instrument cluster complete dial lacquered	(CDN)	1	I250
	5Z1	sand beige			IXFD
	84A	guards red			IXFG
	12H	speed yellow			IXFH

Pos	Part Number	Description	Remark	Qty	Model
	B9A	carrara white			IXFJ
(2)	997 641 911 00	knob actuator trip meter and clock		1	
3	999 073 155 09	tapping screw 4,2 X 19		2	
4	999 507 403 02	u-clamp		2	

Model	Year	MG	SG	Illustration	Restrictions	UPD	20:45	06.02.2010	PORSCHE	PET	PORSCHE
997T2	2010	9	11	911-00		248	USA / CANADA				

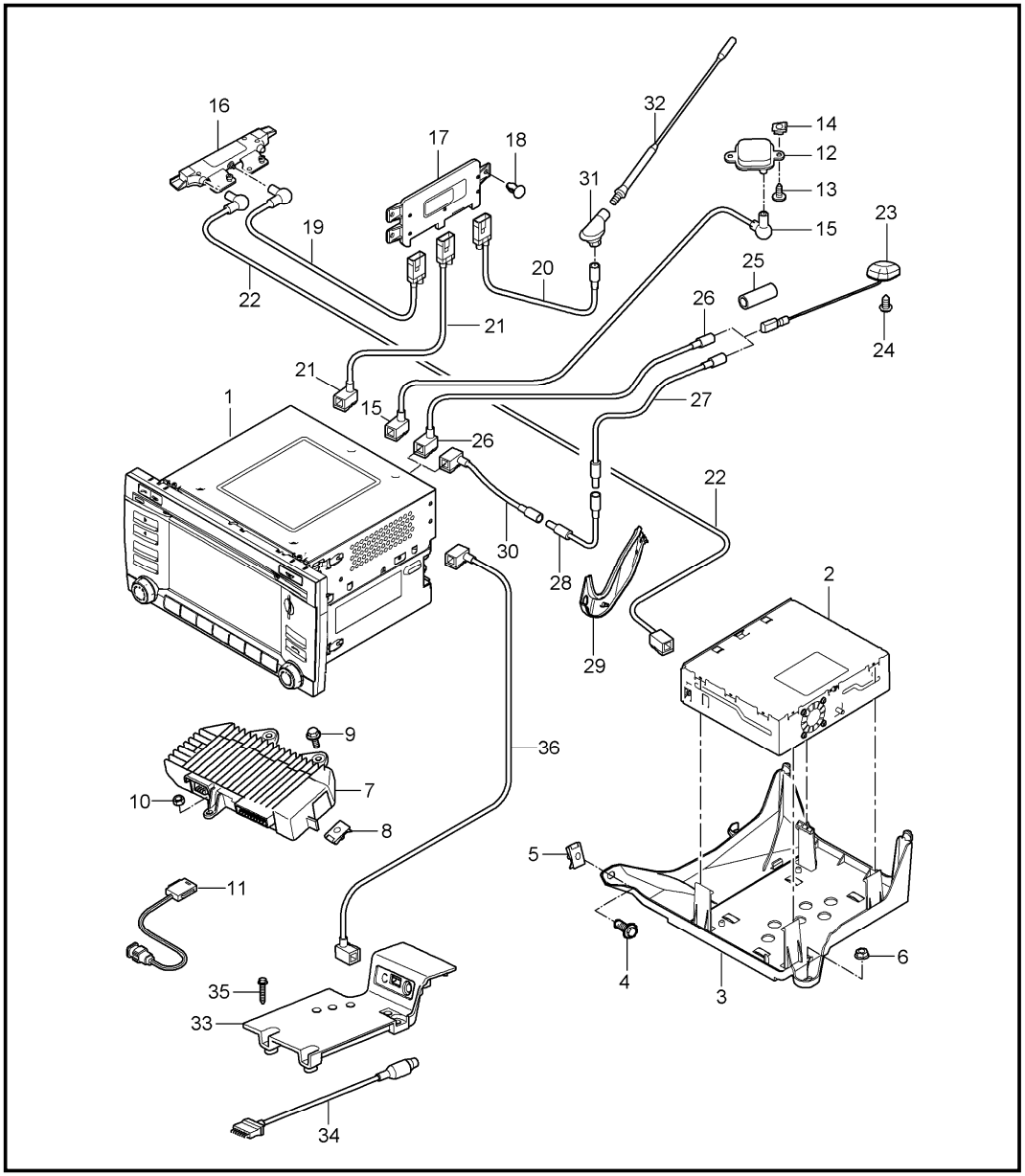

Pos	Part Number	Description	Remark	Qty	Model
		control part navigation system booster control part only in exchange			
1	997 642 960 X	control part		1	I665
	FTC	Matt Black/Galvano Silver we take back: 997.642.960.00.FTC			
1	997 642 961 X	control part		1	I665/686
	FTC	Matt Black/Galvano Silver we take back: 997.642.961.00.FTC			
1	997 642 962 X	control part		1	I665/693
	FTC	Matt Black/Galvano Silver we take back: 997.642.962.00.FTC			
1	997 642 963 X	control part		1	I665/686/693
	FTC	Matt Black/Galvano Silver we take back: 997.642.963.00.FTC			
1	997 642 970 X	control part		1	I665/672
	FTC	Matt Black/Galvano Silver we take back: 997.642.970.00.FTC			
1	997 642 971 X	control part		1	I665/672/686
	FTC	Matt Black/Galvano Silver we take back: 997.642.971.00.FTC			
1	997 642 972 X	control part		1	I665/672/693
	FTC	Matt Black/Galvano Silver we take back: 997.642.972.00.FTC			
1	997 642 973 X	control part		1	I665/672/686 I693
	FTC	Matt Black/Galvano Silver we take back: 997.642.973.00.FTC			

Pos	Part Number	Description	Remark	Qty	Model
		telephone see group 9/11/10			
-	997 642 929 00	rotary knob for control part	/L	1	
-	997 642 930 00	rotary knob for control part	/R	1	
-	997 642 148 02	cd-rom logbook		1	I641
-	997 642 273 51	dvd navigation system for software 997.642.273.01		1	I615
7	997 645 444 04	booster note coding		1	I680
8	999 507 766 02	speed nut M 6		2	I680
9	900 378 035 01	hexagon-head bolt M 6 X 16		2	I680
10	999 084 638 01	hexagon nut M 6		1	I680
11	997 646 315 00	microphone		1	I618/619/666 I671/680
11	997 646 317 00	microphone		1	I680
11	997 646 319 00	microphone		1	I618/619/665 I666/671
-	997 610 233 01	cable guide microphone		1	
12	997 642 105 00	antenna GPS		1	I672/673
13	999 073 210 00	tapping screw 4,8 X 13		1	I672/673
14	999 507 441 01	speed nut 4,8		1	I672/673
15	997 612 030 75	connecting line antenna control part		1	I672
16	997 647 117 00	antenna booster	/L	1	I440
(16)	997 647 118 00	antenna booster	/R	1	I440
17	997 618 122 00	control unit		1	I440
18	999 591 904 40	fastening part		2	I440
19	997 612 069 25	connecting line left antenna booster control unit	/LL	1	I098/461
19	997 612 055 25	connecting line left antenna booster control unit	/LL	1	I098/665
19	997 612 056 25	connecting line right antenna booster control unit	/LL	1	I098/665
20	997 612 066 25	connecting line antenna base control unit		1	I461
(20)	997 612 067 01	connecting line antenna base Power supply		1	I461
21	997 612 057 25	connecting line control unit control part	/LL	1	I098/665
23	997 647 150 02	antenna prime coated		1	I686
24	999 073 432 01	oval-head screw M 5 x 8		1	I686
25	997 610 255 00	protective tube		1	CABRIO I686
26	997 612 080 25	connecting line antenna control part		1	COUPE I686
27	997 612 082 50	connecting line antenna connection point lid convertible top compartm.		1	CABRIO I686

Pos	Part Number	Description	Remark	Qty	Model
28	997 612 082 25	connecting line connection point lid convertible top compartm. connection point rear end		1	CABRIO I686
29	997 610 241 00	cable guide hinge lid convertible top compartm.		1	CABRIO I686
30	997 612 081 25	connecting line connection point rear end control part		1	CABRIO I686
31	997 647 221 00	antenna base		1	I461
32	997 647 223 00	antenna rod		1	I461
33	997 642 465 00	adapter Multimedia interface		1	I870
	01C	satin black			
34	997 612 471 02	connecting cable iPOD		1	I870
35	999 073 429 01	tapping screw 4,2 X 25		3	I870
36	997 612 049 75	connecting line Multimedia interface control part		1	I870

Model	Year	MG	SG	Illustration	Restrictions	UPD	20:45	06.02.2010	PORSCHE PET PORSCHE
997T2	2010	9	11	911-05		248	USA / CANADA		

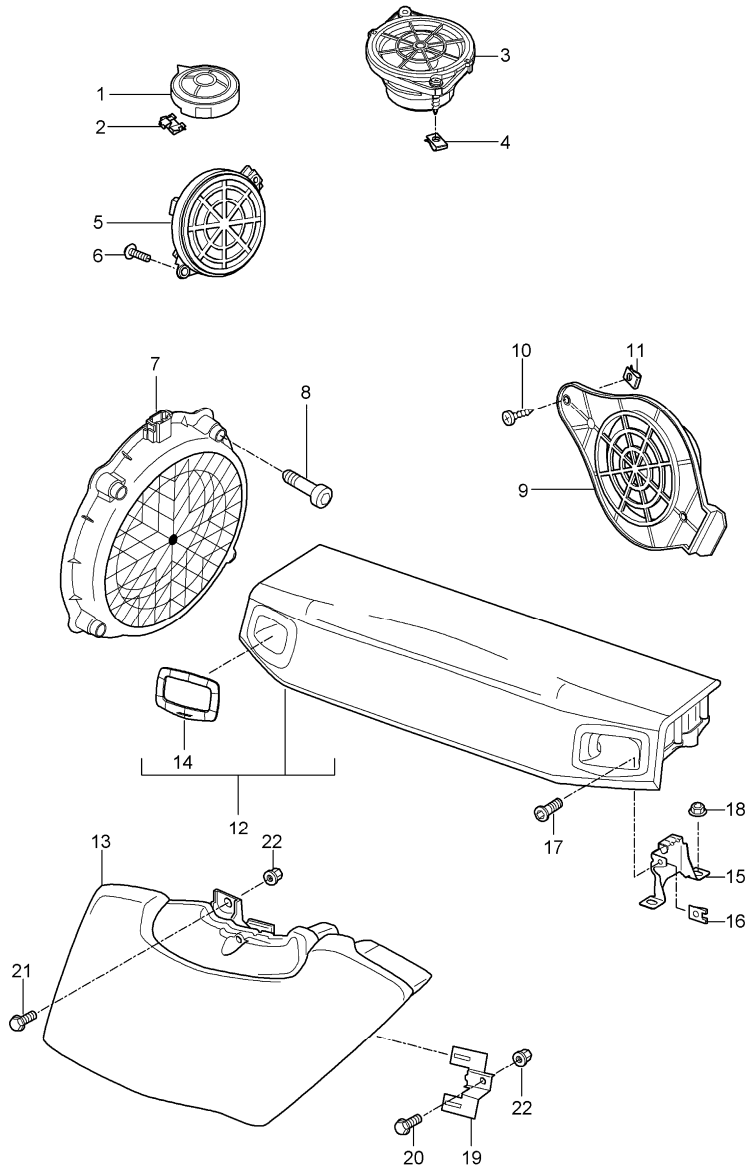

Pos	Part Number	Description	Remark	Qty	Model
		loudspeaker			
(1)	997 645 025 00	tweeter dashboard		2	I680
2	999 591 303 01	u-clamp		4	
(3)	997 645 035 00	loudspeaker dashboard centre		1	I680
4	999 507 971 01	speed nut 4,2		4	
(5)	997 645 545 00	mid-range loudspeaker door		2	I680
6	999 919 164 09	oval-head screw 5,0 X 12		4	
(7)	997 645 555 00	woofer		2	I680
8	900 067 012 03	pan-head screw M 6 X 30		8	
(9)	997 645 045 01	loudspeaker rear		2	I680
10	999 073 225 09	tapping screw 4,8 X 16		2	
11	999 507 441 09	speed nut 4,8		2	
		subwoofer			
12	997 645 564 00	subwoofer		1	COUPE I680
	FMF	black			
	FMG	stone grey			
	FMM	sand beige			
	FMN	sea blue			
	FMP	terracotta			
	FMQ	cocoa			
	FMR	dark grey/natural			
	FMS	brown/natural			
	FTA	carrera red			

Pos	Part Number	Description	Remark	Qty	Model
13	997 645 566 00	subwoofer	/LL	1	CABRIO I098 I680
	A10	black			
	B10	stone grey			
	T10	sand beige			
	E10	sea blue			
	M10	terracotta			
	R10	cocoa			
	D11	dark grey/natural			
	T11	brown/natural			
	N10	carrera red			
14	996 645 568 00	rosette		2	COUPE I680
	A03	black			
	5V7	stone grey			
	5Z1	sand beige			
	8W7	sea blue			
	8X8	terracotta			
	8P9	cocoa			
	T13	brown/natural			
	N23	carrera red			
(15)	996 645 245 00	support	/L	1	COUPE I680
15	996 645 246 00	support	/R	1	COUPE I680
16	999 507 766 02	speed nut		2	COUPE I680
		M 6			
17	999 073 113 09	oval-head screw		2	COUPE I680
		M 6,0 X 50 ASP			
18	900 380 015 01	hexagon nut		4	COUPE I680
		VM 6			
19	997 645 569 00	support		2	CABRIO I680
20	900 378 035 01	hexagon-head bolt		2	CABRIO I680
		M 6 X 16			
21	999 073 223 01	combination screw		1	CABRIO I680
		M 6 X 25			
22	999 500 069 01	blind rivet nut		3	CABRIO I680
		M 6			

Model	Year	MG	SG	Illustration	Restrictions	UPD	20:45	06.02.2010	PORSCHE	PET	PORSCHE
997T2	2010	9	11	911-10		248	USA / CANADA				

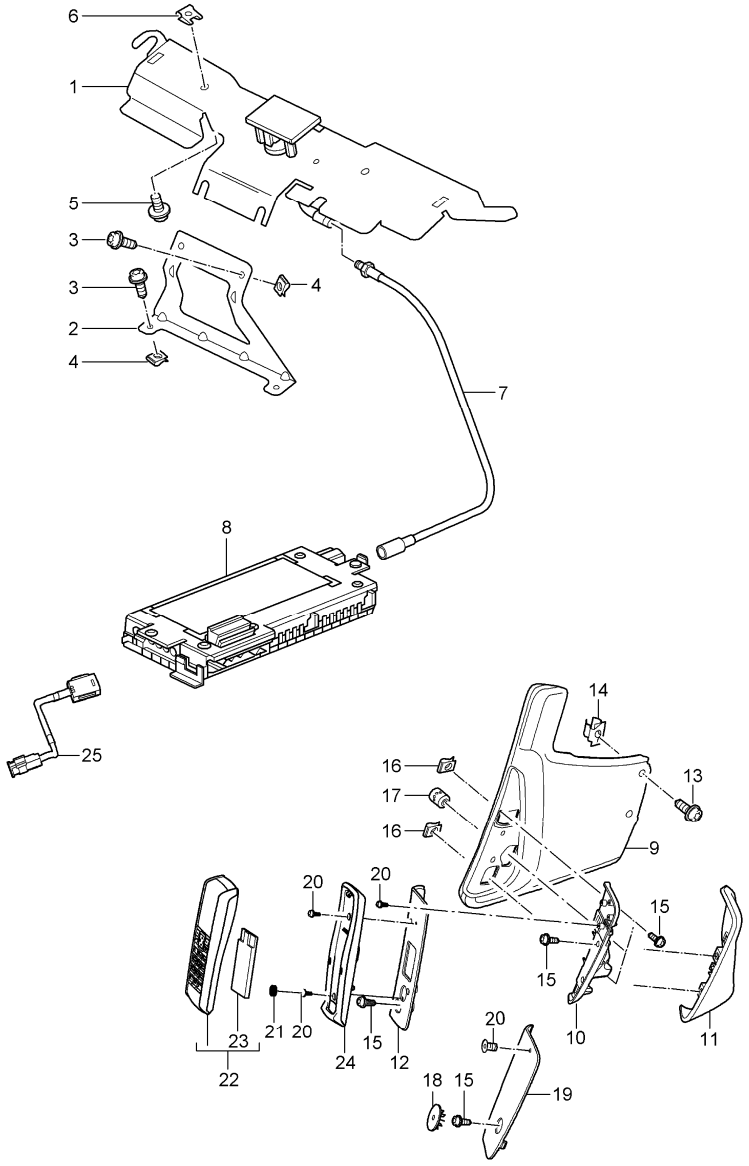

Pos	Part Number	Description	Remark	Qty	Model
		telephone			
1	997 647 125 01	antenna	/LL	1	I098
2	997 647 127 00	support	/LL	1	I098
3	999 073 236 0A	oval-head screw M 6 X 10		4	
4	999 507 550 01	speed nut M 6		4	
5	999 073 210 00	tapping screw 4,8 X 13		2	
6	999 507 441 01	speed nut 4,8		2	
7	997 612 065 75	connecting line		1	I666
(7)	997 612 061 25	connecting line		1	I618/619
8	997 646 218 01	control unit telephone		1	I666
9	997 553 118 07	cover lateral	/LL	1	I098
	FSA	black/grey			
	FSB	stone grey/stone grey			
	FSC	sand beige/sand beige			
	FSD	sea blue/grey			
	FSF	terracotta/terracotta			
	FSG	cocoa/cocoa			
	FSH	darkgrey natural/grey			
	FSJ	brown nat./brown nat.			
	FSP	Carrera Red/Carrera Red			
10	997 553 520 00	adapter	/LL	1	I098/618
(10)	997 553 516 00	adapter	/LL	1	I098/669
11	997 553 418 01	cover	/LL	1	I098/618
	A11	black			
	5X6	stone grey			
	8G2	sand beige			

Pos	Part Number	Description	Remark	Qty	Model
	3S9	sea blue			
	9S5	terracotta			
	9V6	cocoa			
	D12	dark grey/natural			
	T12	brown/natural			
	N12	carrera red			
(11)	997 553 416 00	cover	/LL	1	I098/669
	A11	black			
	5X6	stone grey			
	8G2	sand beige			
	3S9	sea blue			
	9S5	terracotta			
	9V6	cocoa			
	D12	dark grey/natural			
	T12	brown/natural			
	N12	carrera red			
12	997 553 524 00	mounting plate	/LL	1	I098/669
	01C	satin black			
13	999 073 226 09	tapping screw 4,2 X 16		2	
14	999 591 508 01	captive nut 4,2		2	
15	999 073 155 09	tapping screw 4,2 X 13		7	
16	999 507 971 01	speed nut 4,2		2	
17	999 507 645 02	threaded piece 4,2		1	
18	997 553 751 00	cap		1	I618
	01C	satin black			
19	997 553 522 01	mounting plate	/LL	1	I098/618
	01C	satin black			
20	999 919 230 00	countersunk-head screw 3 X 10		4	
21	955 646 311 00	stopper		2	I669
22	7PP 035 725	receiver telephone		1	I669
23	997 646 216 00	battery		1	I669
24	955 646 214 00	mounting receiver		1	I669
(25)	997 646 315 00	microphone		1	I618/619/666 I671/680
(25)	997 646 319 00	microphone		1	I618/619/665 I666/671
-	997 610 233 01	cable guide microphone		1	

KAT.	M-X-I-NR	BENENNUNG-Deutsch BENENNUNG-Englisch
		+----------------------+ ! I-Nummern-Uebersicht ! +----------------------+
		+------------------------------+ ! Summary of optional extras "I"! +------------------------------+
36	IXAA	Aerokit Cup Aerokit Cup
36	IXAF	Aerokit Turbo Turbo aerokit
36	IXAG	Carrera - Heckspoiler Carrera - rear spoiler
36	IXAH	Aerokit Carrera 4S Carrera 4S aerokit
36	IXAJ	Schwellerblenden lackiert Painted sill covers
36	IXCA	Nutleiste (3-teilig) Sportsilber Dashboard trim strip (3-part) sports seats
36	IXCB	Instrumentenabdeckung Unterteil Sportsilber Instrument surround sports seats
36	IXCC	Seitendüsen Sportsilber Side air vents sports seats
36	IXCD	Mitteldüsenträger Sportsilber Center air vent bracket sports seats
36	IXCE	Mittelkonsole hinten Sportsilber Rear center console sports seats
36	IXCG	Sportsitzrückenlehne Alu-Optik Sports seat backrest in Aluminium Look finish
36	IXCH	Seiten-/Mitteldüsenlamellen Sportsilber Side/centre air vent slats, sports seats
36	IXCK	Mittelkonsole hinten Galvanosilber Rear center console in Galvano Silver
36	IXCL	Instrumentenabdeckung Unterteil Galvanosilber Instrument surround in Galvano Silver
36	IXCM	Überrollbügel in Galvanosilber Roll-over bar in Galvano Silver
36	IXCN	Seitendüsen in Alu-Optik (997) Side air vents in Aluminium Look finish (997)
36	IXCW	Blende Gurtaustritt B-Säule in Aluoptik Aluminium Look trim on belt opening in B-pillar
36	IXCY	Mitteldüse Alu-Optik Center air vent in Aluminium Look finish
36	IXCZ	Schaltwegverkürzung Short shifter
36	IXDJ	Zierblende Schalt- und Wählhebel lackiert Decorative trim on gear lever/selector, painted
36	IXDM	Zierblende Schalttafel lackiert Decorative dashboard trim, painted
36	IXDP	Rahmen Kombiinstrument lackiert Instrument cluster frame, painted
36	IXDR	Blende Gurtaustritt B-Säule lackiert Painted trim on belt opening in B-pillar
36	IXDS	Zündschloss Rosette in Leder Ignition lock surround in leather
36	IXDU	Blende Gurtaustritt B-Säule in Leder Leather trim on belt opening in B-pillar
36	IXDV	Abschlussblende Schalttafel in Leder Dashboard end-trim in leather
36	IXDX	Spiegeldreieck in Leder Mirror attachment point finisher, leather
36	IXDZ	Blende Schalthebel in Leder Selector lever cover in leather
36	IXD9	Felgenstern in Wagenfarbe lackiert

		Wheel painted in body colour
36	IXEA	Passivhörer in Leder Passive handset in leather
36	IXE8	Schaltknopf Alu/Wurzelholz Dunkel/Leder Gear lever knob aluminium/dark burr maple/leather
36	IXE9	Handbremshebel Alu/Wurzelholz Dunkel/Leder Handbrake lever aluminium/dark burr maple/leather
36	IXFD	Instrumenten-Zifferblatt lackiert in sandbeige Instrument dials in Sand Beige
36	IXFE	Instrumenten-Zifferblatt lackiert in terrakotta Instrument dials in Terracotta
36	IXFF	Instrumenten-Zifferblatt lackiert in braun/natur Instrument dials in Brown/Natural
36	IXFG	Instrumenten-Zifferblatt lackiert in indischrot Instrument dials in Guards Red
36	IXFH	Instrumenten-Zifferblatt lackiert in speedgelb Instrument dials in Speed Yellow
36	IXFJ	Instrumenten-Zifferblatt lackiert in carraraweiss Instrument dials in Carrara White
36	IXGB	Zierblende Schalttafel, Carbon Decorative dashboard trim, carbon
36	IXGC	Schalthebel Carbon/Alcantara Dashboard carbon/Alcantara
36	IXGD	Handbremshebel Carbon/Alcantara Parking brake handle carbon/Alcantara
36	IXGE	Einsatz Griffmulde, Carbon Handle recess insert, carbon
36	IXJJ	Blende Gurtaustritt B-Säule in Carbon Carbon trim on belt opening in B-pillar
36	IXJL	Luftseitendüse Makassar Makassar Ebony side air vent
36	IXJM	Luftseitendüse Platane Sycamore side air vent
36	IXJN	Mitteldüse Makassar Makassar Ebony center air vent
36	IXJP	Mitteldüse Platane Sycamore center air vent
36	IXJR	Defrosterblende Makassar Makassar Ebony windscreen defroster panel
36	IXJS	Defrosterblende Platane Sycamore windscreen defroster panel
36	IXJT	Mittelkonsole hinten Makassar Makassar Ebony rear center console
36	IXJU	Mittelkonsole hinten Platane Sycamore rear center console
36	IXJ4	Rosette für Zündschloss lederbezogen Leather cover for ignition lock surround
36	IXKB	Luftseitendüse Wurzelholz/Ahorn hell Side air vent in light burr maple
36	IXKC	Luftseitendüse Wurzelholz/Ahorn dunkel Side air vent in dark burr maple
36	IXKD	Luftseitendüse carbon Side air vent in Carbon
36	IXKG	Defrosterblende Wurzelholz/Ahorn hell, Leder "Defroster trim in light burr maple; leather"
36	IXKH	Defrosterblende Wurzelholz/Ahorn dunk, Leder "Defroster trim in dark burr maple; leather"
36	IXKJ	Defrosterblende Carbon/Leder Defroster trim in Carbon/leather
36	IXKL	Lautsprecherabdeckungen in Leder Leather speaker covers
36	IXKM	Lautsprecherabdeckungen Wurzelholz/Ahorn hell Speaker covers in light burr maple
36	IXKN	Lautsprecherabdeckungen Wurzelholz/Ahorn dunkel Speaker covers in dark burr maple
36	IXKP	Lautsprecherabdeckungen in Carbon Carbon speaker covers
36	IXKR	Mitteldüsenträger Wurzelholz/Ahorn hell

		Center air vent bracket in light burr maple
36	IXKS	Mitteldüsenträger Wurzelholz/Ahorn dunkel Center air vent bracket in dark burr maple
36	IXLF	Sportabgasanlage Sports exhaust system
36	IXLG	Deckel Ablagefach Mittelkonsole in Alcantara Centre console storage bin lid in Alcantara
36	IXMA	Himmel mit Leder bezogen Rooflining in leather
36	IXME	Mittelkonsole hinten lackiert Rear section of centre console painted
36	IXMF	Mittelkonsole vorn inclusive 2 Ablagen, Leder Front center console including 2 storage bins, leather
36	IXMJ	Mittelkonsole hinten Carbon Rear section of centre console in Carbon
36	IXMK	Überrollbügel in Exterieurfarbe Roll-over bar in exterior color
36	IXML	Mittelkonsole hinten Wurzelholz Ahorn hell Rear center console in light burr maple
36	IXMP	Sonnenblende Leder, 2 Make-up-Spiegel beleuchtet Leather sun visor, 2 illuminated vanity mirrors
36	IXMR	Sonnenblende Leder, 2 Make-Up-Spiegel beleuchtet Leder Sun visor in leather, 2 illuminated vanity mirrors
36	IXMZ	Mittelkonsole hinten Leder Rear section of centre console in leather
36	IXNB	Mittelkonsole hinten Wurzelholz Ahorn dunkel Rear center console in dark burr maple
36	IXNG	Instrumentenabdeckung Unterteil Leder Instrument surround in leather
36	IXNN	Mitteldüsenträger in Leder Center air vent bracket in leather
36	IXNR	Mitteldüsenträger Carbon Carbon center air vent bracket
36	IXNS	Lenkstock-Verkleidung 4-teilig Leder Leather steering column trim, 4-part
36	IXNU	Zierleiste (Nut) in Leder Leather trim strip (dashboard)
36	IXNV	Zierleiste (Nut) Wurzelholz/Ahorn hell Trim strip (dashboard) in light burr maple
36	IXNW	Zierleiste (Nut) Wurzelholz/Ahorn dunkel Trim strip (dashboard) in dark burr maple
36	IXNX	Zierleiste (Nut) in Carbon Carbon trim strip (dashboard)
36	IXN3	Luftseitendüse Armaturenbrett Leder Dashboard side air vent in leather
36	IXPA	3-Speichen Sportlenkrad, Leder Interieurfarbe 3-spoke sports steering wheel in leather interior co
36	IXPB	3-Speichen Sportlenkrad, Wurzelholz/Ahorn hell, Leder 3-spoke sports steering wheel, light burr maple, leather
36	IXPC	3-Speichen Sportlenkrad, Wurzelholz/Ahorn dunkel, Leder 3-spoke sports steering wheel, dark burr maple, leather
36	IXPD	3-Speichen Sportlenkrad, Carbon/Leder 3-spoke sports steering wheel, Carbon/leather
36	IXPG	3-Speichen Sportlenkrad, Sportsilber 3-spoke sports steering wheel, sports seats
36	IXPT	Deckel Ablagefach Mittelkonsole mit Wappen Centre console storage bin lid with crest
36	IXPU	Multifunktions-Lenkrad Galvanosilber, neue Generation Multi-function steering wheel Galvano Silver, new generation
36	IXPV	Multifunktions-Lenkrad Galvanosilber Multi-function steering wheel, Galvano Silver
36	IXPW	Instrumentenabdeckung Unterteil Wurzelholz/Ahorn Hell Instrument surround in light burr maple
36	IXPX	Instrumentenabdeckung Unterteil Wurzelholz/Ahorn Dunkel Instrument surround in dark burr maple
36	IXPY	Instrumentenabdeckung Unterteil Carbon

		Carbon instrument surround
36	IXRB	Sport-Classic-2 Rad 18"
		18-inch Sport Classic II wheel
36	IXRC	Sport-Techno Rad 18"
		18-inch SportTechno wheel
36	IXRL	Sport-Design-Rad 18"
		18-inch SportDesign wheel
36	IXRN	Distanzscheiben 17 mm, hinten
		17-mm spacers, rear
36	IXRP	Distanzscheiben 5 mm, vorn/hinten
		5-mm spacers, front/rear
36	IXRR	Carrera Sport Rad 19"
		19-in. Carrera Sport wheel
36	IXSA	Sportsitzrückenlehne lackiert
		Painted sports seat backrest
36	IXSB	Sportsitzrückenlehne in Leder
		Leather sports seat backrest
36	IXSC	Porsche Wappen geprägt in Kopfstütze
		Porsche Crest embossed in headrest
36	IXSD	Sitzbedienelemente in Leder
		Front seat controls in leather
36	IXSE	Schalensitz links
		Bucket seat, left
36	IXSF	Schalensitz rechts
		Bucket seat, right
36	IXSG	Rennschalensitz links
		Racing bucket seat, left
36	IXSH	Sicherheitsgurte in Silber
		Silver seat belts
36	IXSJ	6-Punkt-Gurte
		6-point harness
36	IXSL	6-Punkt-Sicherheitsbügel
		6-point safety catch
36	IXSM	Rennsport-Sicherheitskäfig
		Racing safety cage
36	IXSN	Entfall hintere Sitzanlage
		Omission of rear seats
36	IXSR	Schalensitz rechts, Rückseite Carbon
		Carbon back for bucket seat, right
36	IXSS	Schalensitz links, Rückseite Carbon
		Carbon back for bucket seat, left
36	IXST	Sicherheitsgurte in Sandbeige
		Seat belts in Sand Beige
36	IXSU	Abgepolsterter Sitz
		Upholstered seat
36	IXSW	Sicherheitsgurte in Maritimblau
		Seat belts in Maritime Blue
36	IXSX	Sicherheitsgurte in indischrot
		Seat belts in Guards Red
36	IXSY	Sicherheitsgurte in speedgelb
		Seat belts in Speed Yellow
36	IXTG	Schwellerabdeckung innen Leder
		Inner door sills in leather
36	IXTJ	Türtafelteile Wurzelholz/Ahorn hell
		Door panel parts in light burr maple
36	IXTK	Türtafelteile Wurzelholz/Ahorn dunkel
		Door panel parts in dark burr maple
36	IXTL	Türtafelteile Carbon
		Door panel parts in Carbon
36	IXTR	Türtafelteile Alu-Optik
		Door panel parts in Aluminium Look finish
36	IXTT	Türtafelteile Makassar
		Makassar Ebony door panel parts
36	IXTU	Türtafelteile Platane
		Sycamore door panel parts
36	IXTV	Türtafelteile Leder
		Leather door panel parts
36	IXTW	Türtafelteile Galvanosilber

		Door panel parts in Galvano Silver
36	IXUA	Spoilerlippe lackiert Spoiler lip painted
36	IXUV	Deckel Ablagefach Mittelkonsole mit Schriftzug Centre console storage bin lid with logo
36	IXVM	Mitteldüse in Leder Leather center air vent
36	IXVP	Zierleiste inklusive Abdeckung Cupholder in Leder Trim strip including cupholder cover in leather
36	IXVR	Seiten-/Mitteldüsen in Leder Side/centre air vent in leather
36	IXVT	Abdeckung Lautsprecher Türen und Fond in Leder Cover for loudspeakers, doors and rear in leather
36	IXV1	Defrosterblende lederbezogen Defroster trim in leather
36	IXWR	Rahmen PDK-Kulisse in Alu-Optik PDK gate frame in Aluminium Look
36	IXWS	Rahmen PDK-Kulisse lackiert PDK gate frame painted
36	IXWT	Rahmen PDK-Kulisse schwarz lackiert PDK gate frame painted Black
36	IXWU	Rahmen PDK-Kulisse in Leder PDK gate frame in leather
36	IXXD	Einstiegsleisten Carbon, Beleuchtet Door entry guards, carbon, illuminated
36	IXXF	Rote Heckleuchten Red tail lights
36	IXXG	Heckleuchten in Klarglasoptik Tail lights in clear glass look
36	IXXZ	Fussstütze Footrest
36	IXX1	Fussmatten, Schriftzug, Leder eingefasst Floor mats, logo, leather border
36	IXX2	Fussraumbeleuchtung Illuminated footwell
36	IXY5	Kulisse Tiptronic-Wählhebel in Leder Tiptronic gear selector gate in leather
36	IXZB	Mitteldüse in Carbon Carbon centre air vent
36	IXZD	Abdeckung Innenleuchte in Leder Interior light surround in leather
36	IX45	Instrumenten-Zifferblatt lackiert in Interieurfarbe Instrument dial in interior color
36	IX46	Tiptronic-Wählhebel in Alu/Leder Tiptronic selector lever in aluminium/leather
36	IX47	Schaltknopf Carbon/Alu/Leder Gear lever knob in Carbon/leather
36	IX48	Tiptronic-Wählhebel in Carbon/Alu Tiptronic selector lever in Carbon/aluminium
36	IX50	Leistungssteigerung 331/340 kW Powerkit 331/340 kW
36	IX54	Edelstahlendrohre Stainless steel tailpipes
36	IX58	Handbremshebel Carb/Alu/Leder Handbrake lever in Carbon/leather
36	IX65	Tiptronic-Wählhebel Wurzelholz Hell/Alu Tiptronic selector lever in light burr maple/aluminium
36	IX66	Tiptronic-Wählhebel Wurzelholz Dunkel/Alu Tiptronic selector lever in dark burr maple/aluminium
36	IX69	Einstiegsblenden Carbon, Schriftzug Door entry guards in Carbon with logo
36	IX70	Einstiegsblenden Edelstahl, Schriftzug Door entry guards in stainless steel with logo
36	IX71	Instrumenten-Zifferblatt Lackiert/Alufarbe Instrument dial painted/Aluminium Look finish
36	IX72	Schaltknopf Alu/Wurzelholz Hell/Leder Gear lever knob aluminium/light burr maple/leather
36	IX73	Sportfahrwerk Turbo

		Turbo sports suspension
36	IX74	Sportfahrwerk (exclusiv) Sports suspension (exclusive)
36	IX75	Sperrdifferential (exclusiv) Differential lock (exclusive)
36	IX76	Schwellerverkleidungen links/rechts Inner door sill guard, left/right
36	IX97	Schaltknopf Alu/Leder Gear lever knob in aluminium/leather
36	IX99	Naturleder Natural leather
36	I004	GT3 RS GT3 RS
36	I022	Zifferblätter Kombiinstrument in schwarz Black-coloured instrument dials, instrument cluster
36	I023	Zifferblätter Kombiinstrument in silber Silver -coloured instrument dials, instrument cluster
36	I024	Griechenland-Ausführung Version for Greece
36	I025	Zifferblätter Stoppuhr in schwarz Black-coloured instrument dials, stopwatch
36	I026	Zifferblätter Stoppuhr in silber Silver-coloured instrument dials, stopwatch
36	I029	Serienfahrwerk Standard chassis
36	I030	Sportfahrwerk Sport-type chassis
36	I032	Langstreckenfahrwerk Touring suspension
36	I034	Italien - Ausführung Version for Italy
36	I058	Pralldämpfer vorn und hinten Impact absorbers, front and rear
36	I061	Grossbritannien-Ausführung Version for Great Britain
36	I062	Schweden-Ausführung Version for Sweden
36	I063	Luxemburg-Ausführung Version Luxemburg
36	I064	Niederlande-Ausführung Version for Netherlands
36	I065	Dänemark-Ausführung Version for Denmark
36	I066	Norwegen-Ausführung Version for Norway
36	I067	Finnland-Ausführung Version for Finland
36	I068	PAP Rechtslenker-Ausführung PAP right-hand drive version
36	I069	Sonstige-Länderausführung Other country version
36	I071	EU-Länderausführung EU country version
36	I072	Mexico-Ausführung Version for Mexico
36	I073	Russland-Ausführung Version for Russia
36	I074	PAP Linkslenker-Ausführung PAP left-hand drive version
36	I075	China-Ausführung China version
36	I098	Linkslenker-Ausführung Left-hand drive version
36	I099	Rechtslenker-Ausführung Right-hand drive version
36	I101	Spezielle Motorteile GT2 Special GT2 engine parts
36	I111	Österreich-Ausführung

		Version for Austria
36	I113	Kanada - Ausführung Version for Canada
36	I114	Taiwan - Ausführung Version for Taiwan
36	I119	Spanien - Ausführung Version for Spain
36	I124	Frankreich - Ausführung Version for France
36	I126	Beschriftung französisch Control and indications in French lettering
36	I127	Beschriftung schwedisch Control and indications in Swedish lettering
36	I130	Beschriftung englisch Control and indications in English lettering
36	I140	Dynamische Motorlagerung (PADM) Dynamische Motorlagerung (PADM)
36	I150	Betrieb mit verbleitem Kraftstoff Operation with leaded gas
36	I191	Leichtbau Batterie *
36	I193	Japan-Ausführung Version for Japan
36	I194	Batterie 60 Ah Battery, 60 Ah
36	I195	Batterie 70 Ah Battery, 70 Ah
36	I196	Batterie 80 Ah Battery, 80 Ah
36	I197	Stärkere Batterie Stronger battery
36	I198	Stärkerer Anlasser (1,7 kW) Enhanced starter motor (1.7 kW)
36	I199	Batterietrennschalter Battery disconnection switch
36	I200	Batterie 95 Ah 95 Ah battery
36	I210	Kennzeichenhalter Ausführung 2 Licence plate holder version 2
36	I211	Kennzeichenhalter Ausführung 3 Licence plate holder version 3
36	I215	Saudi-Arabien - Ausführung Version for Saudi Arabia
36	I218	Kennzeichenhalter Ausführung 4 Licence plate holder version 4
36	I219	Ausgleichsgetriebe Differential
36	I220	Sperrdifferential 40 % Locking differential 40 %
36	I225	Belgien-Ausführung Version for Belgium
36	I250	PDK-Getriebe (Doppelkupplung) PDK transmission (dual clutch)
36	I265	Automatisch abblendbarer Innenspiegel mit Regensensor Automatic anti-dazzle interior mirror with rain sensor
36	I266	Automatisch abblendbarer Aussenspiegel Automatic anti-dazzle door mirror
36	I267	Automatisch abblendbarer Innen und Aussenspiegel Automatically dimmable interior and door mirrors
36	I268	Regensensor Rain sensor
36	I270	Aussenspiegel für Fahrerseite -plan-, elektrisch verstell- und beheizbar Door mirrors -flat - driver's side, electrically adjustable and heatable
36	I271	Aussenspiegel für Fahrerseite -asphärisch-, elektrisch verstell- und beheizbar Door mirrors -aspherical- driver's side,

		electrically adjustable and heatable
36	I273	Aussenspiegel, elektrisch verstell- und beheizbar Door mirrors, electrically adjustable and heatable
36	I274	Make-Up Spiegel beleuchtet Vanity mirror, illuminated
36	I277	Schweiz-Ausführung Version for Switzerland
36	I288	Scheinwerfer-Reinigungsanlage Headlamp washer
36	I301	Getriebeübersetzung lang Transmission ratio long
36	I305	Schalthebel in Alcantara, schwarz Gear lever in Alcantara, Black
36	I308	Wählhebel in Alcantara, schwarz Selector lever in Alcantara, Black
36	I325	Südafrika/Neuseeland-Ausführung Version for South Africa/New Zealand
36	I335	3-Punkt-Automatik-Gurte, hinten Automatic seat belt, 3-point, rear
36	I338	Heck-Antrieb Rear-wheel drive
36	I339	Allrad-Antrieb All-wheel drive
36	I342	Sitzheizung, links u. rechts Seat heating system, left/right seat
36	I345	Lenkradheizung Heated steering wheel
36	I369	Basissitz links Standard seat, left
36	I370	Basissitz rechts Standard seat, right
36	I375	Sportsitz, Lehnenschale, links Sports seat, backrest shell, left
36	I376	Sportsitz, Lehnenschale, rechts Sports seat, backrest shell, right
36	I377	Sportsitz, Lehnenschale, links, elektrisch verstellbar Sports seat, backrest shell, left, electrically adjustable
36	I378	Sportsitz, Lehnenschale, rechts, elektrisch verstellbar Sports seat, backrest shell, right, electrically adjustable
36	I388	Sportschalensitz links Sports bucket seat, left
36	I389	Sportschalensitz rechts Sports bucket seat, right
36	I392	Carrera Rad 17" 17-inch Carrera wheel
36	I393	Rad Boxster-2 17" (987) 17-inch Boxster II wheel (987)
36	I397	Rad Boxster S 18" (987) 18-inch Boxster II wheel (987)
36	I398	Cayman Rad 17" 17-in. Cayman wheel
36	I401	Cayman S Rad 18" 18-in. Cayman S wheel
36	I402	Carrera 3 Rad 18" Carrera 3 wheel 18-inch
36	I403	Carrera S Rad 19" Carrera S wheel 19-inch
36	I404	Turbo-1 Rad 19" 19" Turbo-1 wheel
36	I405	Carrera Classic Rad 19" Carrera Classic wheel 19-inch
36	I406	Carrera GT Rad 19"/20" Carrera GT wheel 19-inch/20-inch
36	I407	Sport-Design Rad 19"

		SportDesign wheel 19-inch
36	I410	Turbo-2 Rad 18" 18-inch Turbo-2 wheel
36	I411	Carrera-Rad 18" 18-inch Carrera wheel
36	I415	Turbo-Look-2 Rad 18" 18-inch Turbo-Look II wheel
36	I416	Rad GT3 18" 18-inch GT3 wheel
36	I418	Rad Turbo-2 18" GT-Silber 18-inch Turbo II wheel in GT Silver
36	I420	GT3 Rad 19" GT3 wheel 19"
36	I421	Turbo-2 Rad 19" Turbo 2 wheel, 19"
36	I422	Turbo Rad 19" Zentralverschluss Turbo wheel, 19", central lock
36	I424	CD-Ablage Cd compartment
36	I425	Heckscheibenwischer Rear window wiper
36	I426	Ohne Heckscheibenwischer Without rear window wiper
36	I431	Multifunktionslenkrad, Touch & Feel Multi-function steering wheel, touch + feel
36	I432	Lenkrad mit Tiptronic-Bedienung Steering wheel with Tiptronic control
36	I435	Sportlenkrad Sports steering wheel
36	I436	3-Speichen-Airbaglenkrad 3-spoke airbag steering wheel
36	I437	Komfortsitz links, elektrisch verstellbar Comfort seat, left, electrically adjustable
36	I438	Komfortsitz rechts, elektrisch verstellbar Comfort seat, right, electrically adjustable
36	I439	Elektrische, Verdeckbetätigung Electrical hood operation
36	I440	Antennen-Diversity Antenna diversity
36	I441	Radiovorbereitung Radio preparation
36	I444	Diebstahlsicherung, Radschrauben "THATCHAM" Anti-theft lock, wheel bolts "THATCHAM"
36	I446	Radzierdeckel konkav mit farbigem Wappen Concave wheel centers with full-colour Porsche Crest
36	I447	Notrad Emergency wheel
36	I448	Bremsbelag; Sportausführung Brake pad; sport version
36	I450	Keramik-Bremse (PCCB) Ceramic brake (PCCB)
36	I451	Multifunktionslenkrad, makassar, Touch & Feel Multi-function steering wheel, Makassar Ebony, touch + feel
36	I452	Multifunktionslenkrad, platane, Touch & Feel Multi-function steering wheel, Sycamore, touch + feel
36	I453	Multifunktionslenkrad, carbon, Touch & Feel Multi-function steering wheel, Carbon, touch + feel
36	I454	Automatische Geschwindigkeitsregulierung Automatic speed control
36	I459	3-Speichen-Airbaglenkrad, Touch & Feel 3-spoke airbag steering wheel, touch + feel
36	I460	Sportlenkrad, Touch & Feel Sports steering wheel, touch + feel
36	I461	Stabantenne External antenna
36	I465	Nebelschlussleuchte links Rear fog light, left
36	I466	Nebelschlussleuchte rechts

		Rear fog light, right
36	I475	Elektrische Dämpferregelung "PASM" "PASM" electronic damper control
36	I476	Porsche Stability Management (PSM) Porsche Stability Management (PSM)
36	I479	Australien - Ausführung Version for Australia
36	I480	6-Gang Schaltgetriebe 6-speed manual transmission
36	I482	Reifendruckkontrolle, RDK 433 Mhz Tire Pressure Monitoring TPM, 433 MHz
36	I483	Reifendruckkontrolle, RDK 315 Mhz 315-MHz TPM, Tire Pressure Monitoring
36	I484	USA - Ausführung Version for USA
36	I488	Beschriftung deutsch Inscriptions in German language
36	I490	Klangpaket "ASK" Sound system "ASK"
36	I492	Scheinwerfer für Linksverkehr Headlights for left-hand traffic
36	I498	Entfall der Modellbezeichnung am Heck Deletion of model designation on rear end
36	I499	Ausführung für die Bundesrepublik Deutschland Version for Germany
36	I501	Car-Cover Car cover
36	I509	Feuerlöscher Fire extinguisher
36	I513	Lordosenstütze rechter Sitz Lumbar support, right seat
36	I521	Neigungsgeber Tilt sensor
36	I524	Wegfahrsicherung, Zentralverriegelung, 433 MHz Immobilizer, central locking, 433 MHz
36	I525	Wegfahrsicherung, Zentralverriegelung, 315 MHz Immobilizer, central locking, 315 MHz
36	I532	Entfall Fernbedienung Alarmanlage Alarm system remote control omitted
36	I533	Entfall Funkbetätigung Verdeck Radio convertible-top operation omitted
36	I534	Diebstahlsicherungsanlage 433 Mhz Theft security system, 433 MHz
36	I535	Diebstahlsicherungsanlage 315 Mhz Theft security system, 315 MHz
36	I536	-07 Alarmsirene und Neigungsgeber 08- Alarmsirene -07 Alarm siren and tilt sensor 08- Alarm siren
36	I537	Sitzpositions-Steuerung für Komfortsitz, links Seating position control for comfort seat, left
36	I538	Sitzpositions-Steuerung für Komfortsitz, rechts Seating position control for comfort seat, right
36	I539	Mechanische Sitzhöhenverstellung links Mechanical seat-height adjustment, left
36	I540	Mechanische Sitzhöhenverstellung rechts Mechanical seat-height adjustment, right
36	I541	Aktive Sitzbelüftung Active seat ventilation
36	I544	Diebstahlsicherung ohne Infrarot-Überwachung 433 MHz Anti-theft protection without infrared monitoring, 433 MHz
36	I545	Diebstahlsicherung ohne Infrarot-Überwachung 315 MHz Anti-theft protection without infrared monitoring, 315 MHz
36	I549	Dachtransportsystem Roof Transport System
36	I550	Hardtop Hard top
36	I551	Windstop Wind deflector
36	I553	USA-Canada-Ausführung

		Version for USA, Canada
36	I554	Bugspoilerlippe beigelegt Front spoiler lip included
36	I555	Sicherheitsgurte in Schwarz Black seat belts
36	I560	Advanced Airbag Advanced airbag
36	I562	Airbag Fahrer- und Beifahrerseite Airbag, driver's side and front passenger's side
36	I563	Seitenairbag Side airbag
36	I566	Nebelscheinwerfer weiss Front fog lights, white
36	I567	Frontscheibe im oberen Bereich stark eingefärbt Windscreen tinted, upper part darker coloured
36	I568	Windschutzscheibe ohne Bandfilter Windscreen without shade band
36	I571	Aktivkohlefilter Activated charcoal filter
36	I572	Klimaanlage manuell Manual air-conditioning system
36	I573	Klima-Anlage Air conditioner
36	I574	Ohne Klimaanlage Without air conditioner
36	I575	Kofferraumkühlung Luggage compartment cooling system
36	I581	Mittelkonsole vorn Centre console, front
36	I584	Ablagebox auf Motordeckel Storage box on engine cover
36	I585	Getränkehalter Cupholder
36	I586	Lordosenstütze linker Sitz Lumbar support, left seat
36	I594	Himmel Alcantara Alcantara rooflining
36	I601	Xenon-Licht Xenon lighting system
36	I602	Hochgesetzte Bremsleuchte Raised stop lamp
36	I603	Bixenon und dynamisches Kurvenlicht Bi-Xenon and dynamic cornering light
36	I605	LED-Tagfahrlicht LED daytime driving lights
36	I606	Tagfahrlicht Daytime driving lights
36	I607	Garagentoröffner "Homelink" 315Mhz Garage door opener "Homelink", 315 MHz
36	I608	Garagentoroeffner "Homelink" 433Mhz Garage door opener "Homelink" 433 MHz
36	I610	DVD Navigation "Paket Europa" DVD navigation, "Europe package"
36	I611	DVD Navigation Südafrika DVD navigation South Africa
36	I612	DVD Navigation mittlerer Osten DVD navigation middle east
36	I613	DVD Navigation Australien DVD navigation australia
36	I614	DVD Navigation Asien-Pazifik DVD navigation asia-pacific
36	I615	DVD Navigation, Nordamerika DVD navigation system, North America
36	I616	DVD, Navigation Russland DVD, Navigation Russia
36	I617	DVD Navigation Südamerika DVD navigation South America
36	I618	Telefonvorbereitung

		Preparation for telephone installation
36	I619	Handyvorbereitung (BLUETOOTH) ohne Konsole Mobile phone preparation (BLUETOOTH) without console
36	I620	E-Gas Electronic accelerator
36	I621	12 Volt Steckdose, Beifahrerseite, Fussraum 12-V socket, passenger's side, footwell
36	I625	Porsche "entry and drive""KESSY" "KESSY" Porsche Entry and Drive
36	I635	Einparkhilfe Parking assistant
36	I639	Sport-Chrono-Paket Sport Chrono package
36	I640	Sport-Chrono-Paket plus Sport Chrono package plus
36	I641	elektronisches Fahrtenbuch electronic logbook
36	I650	Elektrisches Schiebedach Electrical sliding roof
36	I651	Elektrischer Fensterheber Electric window opener
36	I652	Ohne Schiebe-Hubdach Without sliding/tilting roof
36	I657	Servolenkung Power assisted steering
36	I659	Bordcomputer On-board computer
36	I660	OBD 2 OBD 2
36	I661	Verschärftes Abgaskonzept Stricter emission-control concept
36	I663	Kraftstoffpumpensteuerung Fuel pump activation
36	I664	ORVR ORVR
36	I665	-2008 PCM 2, 2009- PCM 3 Grundmodul inclusive Radio -2008 PCM 2, 2009- PCM 3 basic module incl. radio
36	I666	-2008 PCM 2, 2009- PCM 3 Telefon (GSM) -2008 PCM 2, 2009- PCM 3 telephone (GSM)
36	I668	PCM2 Telefonbedienhoerer PCM2 telephone handset
36	I669	PCM 3 - Telefon Bedienhörer (BLUETOOTH) PCM 3 - Telephone handset (BLUETOOTH)
36	I670	PCM2 Navigation PCM2 navigation
36	I671	Sprachbediensystem Voice control system
36	I672	-2008 PCM 2, 2009- PCM 3 Navigation Offroad -2008 PCM 2, 2009- PCM 3 Offroad navigation
36	I673	Vorbereitung Navigation China Navigation system preparation, China
36	I674	Vorrüstung "Vehicle Tracking System" "Vehicle Tracking System" preparation
36	I675	Ohne Radio Vorbereitung (Japan-Navi) Without radio preparation (Japan navigation system)
36	I676	TV-Tuner TV tuner
36	I677	"Drivercard" Antenne "Driver card" antenna
36	I678	Anbindung Alarmanlage Alarm system connection
36	I679	Wiederstartverhinderung Restart inhibitor
36	I680	Soundpaket BOSE BOSE sound package
36	I685	Geteilte Rücksitzanlage Rear seats, split
36	I686	SAT-Radioempfang XM (SDARS)

		SAT radio reception XM (SDARS)
36	I689	CD-Wechsler Vorbereitung Preperation for CD autochanger
36	I690	CD-Radio "Porsche Online Pro" CD radio "Porsche Online Pro"
36	I692	CD-Wechsler "Porsche" CD autochanger "Porsche"
36	I693	CD-/DVD-Wechsler integriert Integrated CD/DVD autochanger
36	I694	CD-Radio "PORSCHE CDR 24" CD radio "PORSCHE CDR 24"
36	I697	CD-Radio "Porsche CDR 23" CD radio "Porsche CDR-23"
36	I711	Entfall Unterbodenschutz Omission underbody protection
36	I789	Individualfarbe Colour to sample
36	I796	Ganzlederausstattung Naturleder Full leather trim natural leather
36	I798	Ganzlederausstattung Sonderleder Full leather trim special leather
36	I799	Ganzlederausstattung nach Wahl Full leather trim by choice
36	I801	Holzpaket Makassar, dunkel seidenmatt Makassar Ebony wood package, dark (matt satin finish)
36	I802	Holzpaket Platane, hell seidenmatt Sycamore package, light (matt satin finish)
36	I803	Carbonpaket Carbon package
36	I804	Exterieur-Paket Carbon GT2 GT2 Carbon exterior package
36	I805	Lifestyle-Packet Lifestyle package
36	I810	Fussmatten Floor mats
36	I840	Sportlenkrad-PDK mit Paddle Sports steering wheel for PDK with paddle
36	I841	Basislenkrad Glattleder Basic steering wheel Smooth leather
36	I844	Multifunktionslenkrad Glattleder Multi-function steering wheel Smooth leather
36	I845	Multifunktionslenkrad Carbon Multi-function steering wheel Carbon
36	I847	Multifunktionslenkrad Makassar Multi-function steering wheel Makassar
36	I870	Universale Multimedia-Schnittstelle Universal multimedia interface
36	I912	ohne Typschild without ID plate
36	I936	Sitzbezüge hinten, Leder Seat covers, rear, leather
36	I937	Sitzbezüge hinten, Kunstleder Seat covers, rear, leatherette
36	I939	Sitzbezüge hinten, Raffleder Seat covers, rear, draped leather
36	I946	Sitzbezüge vorne, Leder/Leder/Kunstleder Seat covers, front, leather/leather/leatherette
36	I950	Sitzbezüge vorne, Alcantara/Kunstleder/Kunstleder Alcantara seat covers, front
36	I951	Sitzbezüge vorne, Alcantara/Leder/Leder Seat covers front, Alcantara/leather/leather
36	I970	Innenaustattung zweifarbig Two-tone interior
36	I971	Naturleder mit "TORO"-Prägung "TORO" embossed leather
36	I981	Leder-Ausstattung, ohne Sitzbezug Leather equipment, without seat covers
36	I982	Sitzbezüge vorne, Raffleder/Leder/Leder

		Seat covers, front, draped leather/leather/leather
36	I983	Sitzbezüge vorne, Leder Seat covers, front, leather
36	I985	Sitzbezüge, Leder/Leder/Kunstleder, 2 Seat covers, leather/leather/leatherette, 2
36	I990	Sitzbezüge vorne, Stoff/Stoff/Kunstleder Seat covers, front, cloth/cloth/leatherette
36	I991	Airbagmodul in Leder Steering wheel airbag module in leather
36	I998	Leder, Natur Leather, natural
36	I999	Innenraumüberwachung Sensor für Lederfarbe nach Wahl Passenger compartment monitoring sensor for leather colour of choice

PORSCHE

V-Pages

PORSCHE

Model	Year	MG	SG	Illustration	VIN No.	Update		
997T2	10					249	13:00	26.02.2010

PET CONTAINS THE ORDERING DETAILS FOR ALL MODELS SHOWN IN THE MODEL OVERVIEW.

THE UPDATE SERVICE IS PERFORMED AUTOMATICALLY VIA INTERNET UPDATE.

THE VERSION IS SHOWN IN THE HEADER AS "UPDATE 123/12"

SEATS AND RELATED ITEMS FOR MODELS INTRODUCED BEFORE 1997 ARE SHOWN IN THE STZ CATALOGUE.

SEATS AND RELATED ITEMS FOR MODELS INTRODUCED AFTER 1997 ARE SHOWN IN THE CORRESPONDING VEHICLE CATALOGUES.

ALL ILLUSTRATIONS ARE NON-BINDING.

SUBJECT TO CHANGE.

Model	Year	MG	SG	Illustration	VIN No.	Update		13:03	26.02.2010
997T2	10					249			

EQUIPMENT BY COUNTRY REGULATIONS

(A)	AUSTRIA
(AG)	ARABIAN GULF STATES
(AUS)	AUSTRALIA
(B)	BELGIUM
(BR)	BRAZIL
(CDN)	CANADA
(CH)	SWITZERLAND
(CN)	PEOPLE'S REPUBLIC OF CHINA
(D)	FEDERAL REPUBLIC OF GERMANY
(DK)	DENMARK
(E)	SPAIN
(F)	FRANCE
(GB)	GREAT BRITAIN
(GR)	GREECE
(HK)	HONGKONG

Model	Year	MG	SG	Illustration	VIN No.	Update		13:03	26.02.2010
997T2	10					249			

(I)	ITALY
(J)	JAPAN
(L)	LUXEMBURG
(N)	NORWAY
(NL)	NETHERLANDS
(NZ)	NEW ZEALAND
(P)	PORTUGAL
(ROK)	KOREA
(RC)	TAIWAN
(THA)	THAILAND
(S)	SWEDEN
(SA)	SAUDI ARABIA
(SF)	FINLAND
(USA)	UNITED STATES OF AMERICA
(ZA)	SOUTH AFRICA

Model	Year	MG	SG	Illustration	VIN No.	Update		
997T2	10					249	13:03	26.02.2010

IN COLUMN - A -

IDENTIFICATION LETTER FOR PERIOD OF INSTALLATION
THAT IS REPEATED SEVERAL TIMES IN THE CATALOG GROUP.

EXPLANATION PLEASE FIND IN TEXT COLUMN OF THE CATALOG GROUP

IN COLUMN - QU - = NO. OF PIECES

1	NUMBER PER APPLICATION
X	NUMBER AS NEEDED
*	AVAILABLE ONLY IN RUNNING LENGTHS 1 = 1 METRE

IN COLUMN - MODEL/SYMBOL -

M650	OPTIONAL EQUIPMENT - SEE M-NO. LIST
-98	LIMITATION OF MODEL YEAR FOR INSTANCE: VALID UP TO END OF MODEL YEAR 1997
/LL	LHD
/RL	RHD

/V	FRONT I

Model	Year	MG	SG	Illustration	VIN No.	Update		13:03	26.02.2010
997T2	10					249			

```
                        I
/H          REAR        I
                        I---> APPLIES TO
/L          LEFT        I     DIRECTION OF TRAVEL
                        I
/R          RIGHT       I
            ---------+

WW          THE PART CAN BE USED INSTEAD OF THE
            PRECEDING ONE.
```

Model	Year	MG	SG	Illustration	VIN No.	Update		13:03	26.02.2010
997T2	10					249			

LEGENDS AND NOTICES

==========

IN COLUMN -S- STATUS

N NEW ADDITION

P PART ALREADY IN PROGRAMME, BUT NEW AT THIS APPLICATION

W DELETED AT THIS APPLICATION, BUT CONTINUED TO BE CARRIED

K THIS PART MUST BE RE-ORDERED IF IT IS UNAVAILABLE WHEN THE ORDER IS FIRST PLACED. ORDER BACKLOGS ARE NOT PROCESSED.

A STOCK TO BE USED UP

U DELETED WITHOUT REPLACEMENT

* PART ALSO OR ONLY AVAILABLE IN REPAIR KIT

> ALSO AVAILABLE IN EXCHANGE

IN COLUMN - ILL. -

---

1 IDENTIFICATION NO. IN ILLUSTRATION

(1) PART ONLY SIMILAR AS ILLUSTRATED

Model	Year	MG	SG	Illustration	VIN No.	Update		13:03	26.02.2010
997T2	10					249			

```
          -         PART IS NOT ILLUSTRATED

                    FIG.-NUMBERS FOR WHICH THERE IS SHOWN NO TEXT ARE
                    NOT VALID FOR THIS EDITION OF CATALOGUE



                    IN COLUMN -PART NUMBER/CODE-
                    ----------------------------

000 000 000 00      PART NUMBER EQUALS ORDERING NO., IF A CODE IS
                    SHOWN, IT WILL HAVE TO BE PART OF ORDERING
                    NUMBER

               01C  COLOUR CODE

                    IN COLUMN -TEXT
                    ----------------

                    INSTALLATION WITH ENGINE OR CHASSIS
                    NUMBER-RANGE

                                EXAMPLE:

M 66W 00389>>                   FROM ENGINE NO.

F           >>99WS6 00889       UP TO CHASSIS NO.
```

V-Pages

Model	Year	MG	SG	Illustration	VIN No.	Update		13:02	26.02.2010
997T2	10					249			

VEHICLE TYPE	TRANSM. TYPE	MY	TRANSMISSION NO.	TECHNICAL DATA
997 TURBO	G97.55	10 A	G9755 1 002001>999999	6-GANG
997 TURBO PDK	CG1.50	10 A	CG150 1 002001>999999	7-GANG

Model	Year	MG	SG	Illustration	VIN No.	Update		13:02	26.02.2010
997T2	10					249			

EXPLANATION OF THE TRANSMISSION-NUMBERS USED IN THE CATALOGUE

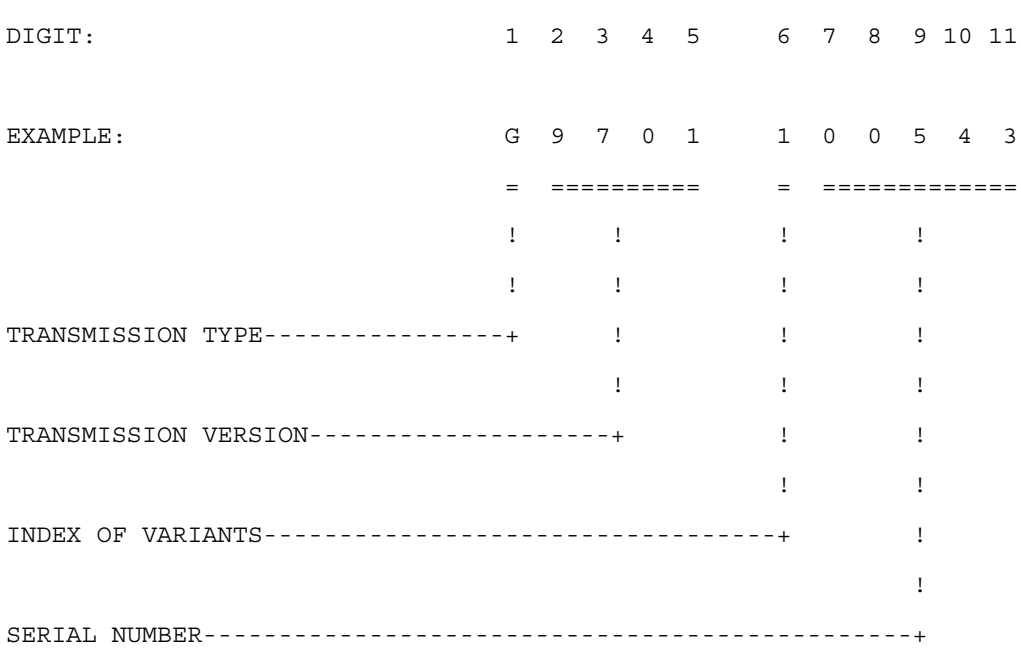

PORSCHE

V-Pages

PORSCHE

Model	Year	MG	SG	Illustration	VIN No.	Update		13:02	26.02.2010
997T2	10					249			

VEHICLE TYPE	ENGINE TYPE	MY	ENGINE NO.	TECHNICAL DATA
997 TURBO	MA1.70	10 A	_A 00501>99999	6ZYL/3,8L /368 KW

Model	Year	MG	SG	Illustration	VIN No.	Update		13:01	26.02.2010
997T2	10					249			

EXPLANATION OF THE MOTOR-NUMBERS USED IN THE CATALOGUE

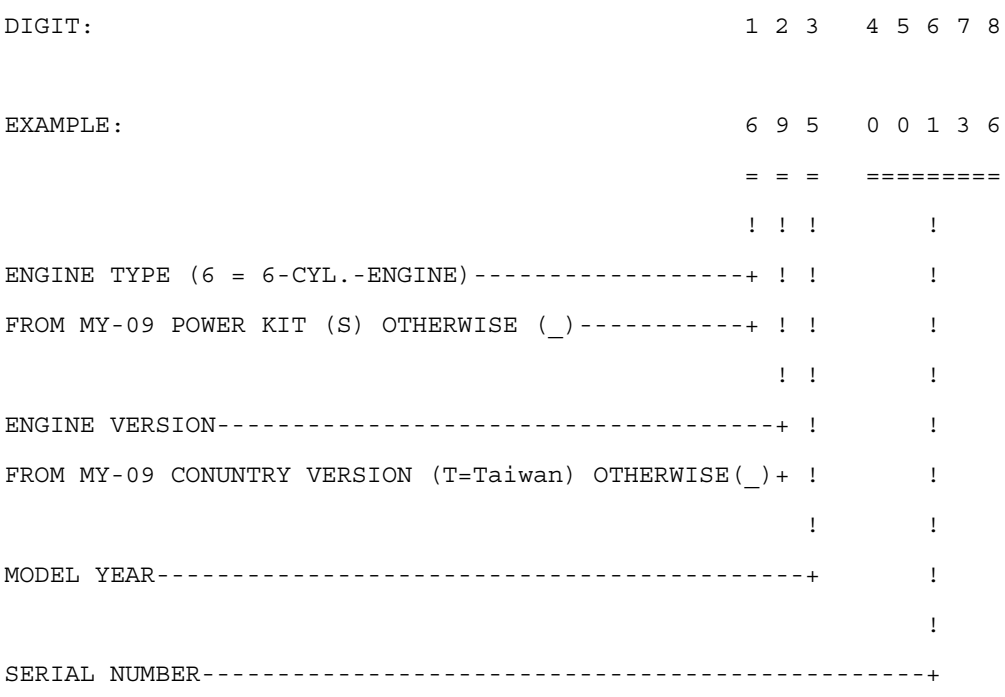

PORSCHE

V-Pages

PORSCHE

Model	Year	MG	SG	Illustration	VIN No.	Update		13:01	26.02.2010
997T2	10					249			

VEHICLE TYPE	MY	VIN	ENGINE TYPE
997 TURBO	10 A	99AS7 60061>66000	MA1.70 368 KW
997 TURBO (CN,MEX,BR,KOR)	10 A	99AS7 66061>70000	MA1.70 368 KW
997 TURBO (USA,CDN)	10 A	A9AS7 66061>70000	MA1.70 368 KW
997 TURBO CABRIO	10 A	99AS7 70061>73000	MA1.70 368 KW
997 TURBO CABRIO (CN,MEX,BR,KOR)	10 A	99AS7 73061>75000	MA1.70 368 KW
997 TURBO CABRIO (USA,CDN)	10 A	A9AS7 73061>75000	MA1.70 368 KW

Model	Year	MG	SG	Illustration	VIN No.	Update		13:01	26.02.2010
997T2	10					249			

EXPLANATION OF THE ABRIDGED VERSION OF THE VEHICLE IDENT. NUMBERS (VIN)

USED IN THE CATALOGUE

```
 DIGIT:                1 2 3  4 5 6  7 8  9  10  11  12  13 14 15 16 17

 EXAMPLE:              W P 0  Z Z Z  9 9  Z   5   S   7   0  0  1  2  5
                                    ===      =   =   =   =============
                                     !       !   !   !          !
VEHICLE TYPE 1ST+2ND DIGIT----------------+  !   !   !          !
                                          !  !   !   !          !
MODEL YEAR--------------------------------------+   !   !          !
                                                !   !          !
MANUFACTURING LOCATION----------------------------------+   !          !
                                                        !          !
VEHICLE TYPE 3RD DIGIT------------------------------------+          !
                                                                   !
SERIAL NUMBER-------------------------------------------------------+
```